A PROJECT OF THE
PEORIA PARK DISTRICT

PEORIA PLAYHOUSE CHILDREN'S MUSEUM
GLEN OAK PARK

2218 N. PROSPECT RD.
PEORIA, ILLINOIS

PEORIA PARK DISTRICT
PEORIA, ILLINOIS

PROJECT # 04-040B

PROJECT MANUAL

APRIL 1, 2014

PACKAGE #_____

PROJECT MANUAL INCLUDING SPECIFICATIONS FOR:

PEORIA PLAYHOUSE CHILDREN'S MUSEUM
GLEN OAK PARK
2218 N. PROSPECT RD.
PEORIA, ILLINOIS

ARCHITECT:	APACEDESIGN ARCHITECTS & ENGINEERS 2112 E. WAR MEMORIAL DRIVE PEORIA, IL 61614-8002 TELEPHONE: 309-685-4722 FAX: 309-685-4784
ELECTRICAL ENGINEER:	KEITH ENGINEERING DESIGN INC. 208 S. FIRST STREET MORTON, IL 61550 TELEPHONE: 309-938-4005 FAX: 309-263-5657
STRUCTURAL ENGINEER:	HANSON PROFESSIONAL SERVICES INC. 2900 W. WILLOW KNOLLS ROAD PEORIA, IL 61614

OWNER:	PLEASURE DRIVEWAY AND PARK DISTRICT OF PEORIA, PEORIA, ILLINOIS
TRUSTEES:	TIMOTHY J. CASSIDY, PRESIDENT ROBERT L. JOHNSON, SR. JACQUELINE J. PETTY JAMES T. HANCOCK KELLY A. CUMMINGS MATTHEW P. RYAN NANCY L. SNOWDEN
PROJECT MANAGER:	BECKY FREDRICKSON PLANNING, DESIGN & CONSTRUCTION DIVISION BRADLEY PARK EQUIPMENT SERVICE 1314 N. PARK ROAD PEORIA, ILLINOIS 61604 TELEPHONE: (309) 686-3386
ADMINISTRATIVE STAFF:	BONNIE W. NOBLE, EXECUTIVE DIRECTOR MICHAEL BAIETTO, SUPERINTENDENT OF PARKS JANET BUDZYNSKI, SUPERINTENDENT OF FINANCE AND ADMINISTRATIVE SERVICES BECKY FREDRICKSON, SUPERINTENDENT OF PLANNING, DESIGN AND CONSTRUCTION CYNDY MCKONE, SUPERINTENDENT OF MARKETING/PUBLIC RELATIONS DENNIS MANTICK, SUPERINTENDENT OF RECREATION AND LEISURE SERVICE SHALESSE PIE, SUPERINTENDENT OF HUMAN RESOURCES BILL ROEDER, SUPERINTENDENT OF RIVERFRONT DIVISION BRENT WHEELER, SUPERINTENDENT, RIVERPLEX RECREATION AND WELLNESS CENTER DAVID WHEELER, ADMINISTRATIVE ASSISTANT BILL WOOLARD, SUPERINTENDENT OF GOLF

****

Address all communications regarding this work to the Project Manager listed above.

ADVERTISEMENT FOR BIDS

Sealed bids will be received by the Peoria Park District, Peoria, Illinois, hereinafter known as the Owner, for the following project:

Peoria PlayHouse Children's Museum
Glen Oak Park
2218 N. Prospect Rd.
Peoria, IL 61603

It is the intent of the Owner to receive Base Bids & Alternates for the project listed above.

Sealed bids will be received until 1:30 p.m., Tuesday, April 29, 2014 prevailing time, by the Owner, at the Peoria Park District Administrative Office, 1125 W. Lake Ave., Peoria, Illinois 61614. (The Board Room clock shall be the official time keeping device in respect to the bid submission deadline.)

An electronic file including Bid Documents is available at www.peoriaparks-planning.org at no charge. Bid Documents, including Plans, Specifications and Interpretations for this project may be obtained at the Planning, Design & Construction Department, Bradley Park Equipment Service, 1314 N. Park Road, Peoria, IL 61604. Telephone (309) 686-3386. A non-refundable plan deposit of $150.00 will be charged for each printed set of Bid Documents.

A list of planholders can be obtained upon request. This information will be available up to twenty-four (24) hours prior to the scheduled bid opening time. **After that deadline, no information pertaining to the project will be given.**

A 10% Bid Bond is required, and is to be included with the Bid Proposal. The successful Bidder will be required to furnish a 100% Performance Bond and a 100% Labor and Materials Payment Bond within ten (10) days of formal Award of Contract.

The general prevailing rate of wage for the Peoria area shall be paid for each craft or type of worker needed to execute this contract or perform this work as required by the State of Illinois Department of Labor. Additionally, it is required that provisions of the Illinois Preference Act, the Illinois Drug Free Workplace Act, and the Substance Abuse Prevention on Public Works Act must be adhered to. Bidders are also advised that contract documents for this project include the non-discrimination, equal opportunity and affirmative action provisions in the Human Rights Act and rules and regulations of the Department of Human Rights. The Peoria Park District is an AA/EEO organization and encourages participation by minority and female-owned firms.

The Peoria Park District reserves the right to reject any or all bids, waive technical deficiencies, informalities or irregularities or rebid any project.

PLEASURE DRIVEWAY AND PARK DISTRICT
OF PEORIA, ILLINOIS

BY: TIMOTHY J. CASSIDY, President

BY: V. JOYCE MCLEMORE, Secretary

TABLE OF CONTENTS

TITLE PAGE(S)	1-2
INVITATION TO BID	3
TABLE OF CONTENTS	4-8
BIDDING DOCUMENTS:	
- SUPPLEMENTARY INSTRUCTIONS TO BIDDERS	9-13
- BID FORM(S)	14-17
- CERTIFICATE OF EQUAL EMPLOYMENT OPPORTUNITY COMPLIANCE FOR CONTRACTORS AND VENDORS	18
- WORKFORCE PROFILE AND INSTRUCTIONS	19-21
- SEXUAL HARASSMENT POLICY STATEMENT	22-24
- ILLINOIS DRUG FREE WORKPLACE CERTIFICATION	25
- SUBSTANCE ABUSE PREVENTION PROGRAM CERTIFICATION	26
- CERTIFICATION OF SAFETY COMPLIANCE	27
- INDIVIDUAL CONTRACTOR CERTIFICATION	28
- CORPORATE CONTRACTOR CERTIFICATION	29
- MAJOR SUBCONTRACTORS LIST	30
- DIRECTORY OF MINORITY & WOMEN OWNED BUSINESS ENTERPRISES	31-35
- ILLINOIS DEPARTMENT OF LABOR - PREVAILING WAGES FOR PEORIA COUNTY	
- SAMPLE ADDENDUM FORM	36
CONTRACT DOCUMENTS:	
- AGREEMENT BETWEEN OWNER AND CONTRACTOR	37-43
- PERFORMANCE BOND	44-45
- LABOR & MATERIALS PAYMENT BOND	46-47
- CONTRACTOR'S AFFIDAVIT	48
- LIEN WAIVER FORMS	49-52
- WEEKLY WORKFORCE REPORT	53-54
- CERTIFIED PAYROLL FORM	
- W-9	
- SUPPLEMENTAL GENERAL CONDITIONS	55-70
PROJECT SPECIFICATIONS:	
GENERAL REQUIREMENTS:	71-83
DIVISION 01 – GENERAL REQUIREMENTS	
000107 SEALS PAGE	
002513 PRE-BID MEETINGS	
011000 SUMMARY	
012200 UNIT PRICES	
012300 ALTERNATES	
012500 SUBSTITUTION PROCEDURES	
012600 CONTRACT MODIFICATION PROCEDURES	
012900 PAYMENT PROCEDURES	
013100 PROJECT MANAGEMENT AND COORDINATION	
013200 CONSTRUCTION PROGRESS DOCUMENTATION	
013233 PHOTOGRAPHIC DOCUMENTATION	
013300 SUBMITTAL PROCEDURES	
014000 QUALITY REQUIREMENTS	
015000 TEMPORARY FACILITIES AND CONTROLS	
016000 PRODUCT REQUIREMENTS	
017300 EXECUTION	
017700 CLOSEOUT PROCEDURES	
017823 OPERATION AND MAINTENANCE DATA	
017839 PROJECT RECORD DOCUMENTS	
017900 DEMONSTRATION AND TRAINING	

TECHNICAL SPECIFICATIONS

DIVISION 02 – EXISTING CONDITIONS
02082 ASBESTOS ABATEMENT
024119 SELECTIVE DEMOLITION

DIVISION 03 – CONCRETE
033000 CAST-IN-PLACE CONCRETE

DIVISION 04 – MASONRY
042200 CONCRETE UNIT MASONRY

DIVISION 05 – METALS
053100 STEEL DECKING
054000 COLD-FORMED METAL FRAMING
055000 METAL FABRICATIONS
055113 METAL PAN STAIRS
055213 PIPE AND TUBE RAILINGS

DIVISION 06 – WOOD, PLASTICS, AND COMPOSITES
061000 ROUGH CARPENTRY
061600 SHEATHING
064116 PLASTIC-LAMINATE-FACED ARCHITECTURAL CABINETS

DIVISION 07 – THERMAL AND MOISTURE PROTECTION
072100 THERMAL INSULATION
079200 JOINT SEALANTS

DIVISION 08 – OPENINGS
081113 HOLLOW METAL DOORS AND FRAMES
083113 ACCESS DOORS AND FRAMES
083513 FOLDING DOORS
084113 ALUMINUM-FRAMED ENTRANCES AND STOREFRONTS
087100 DOOR HARDWARE
088000 GLAZING
089119 FIXED LOUVERS

DIVISION 09 – FINISHES
092216 NON-STRUCTURAL METAL FRAMING
092300 GYPSUM PLASTERING
092900 GYPSUM BOARD
093013 CERAMIC TILING
095113 ACOUSTICAL PANEL CEILINGS
096513 RESILIENT BASE AND ACCESSORIES
096516 RESILIENT SHEET FLOORING
096519 RESILIENT TILE FLOORING
096813 TILE CARPETING
096816 SHEET CARPETING
099113 EXTERIOR PAINTING
099123 INTERIOR PAINTING

DIVISION 10 – SPECIALTIES
101423 PANEL SIGNAGE
102113.19 PLASTIC TOILET COMPARTMENTS
102600 WALL AND DOOR PROTECTION
102800 TOILET, BATH, AND LAUNDRY ACCESSORIES
104413 FIRE PROTECTION CABINETS
104416 FIRE EXTINGUISHERS

DIVISION 12 – FURNISHINGS
123661 SIMULATED STONE COUNTERTOPS

DIVISION 14 – CONVEYING EQUIPMENT
142100 ELECTRIC TRACTION ELEVATORS

DIVISION 21 – FIRE SUPPRESSION
210529 SUPPORTS AND ANCHORS FOR FIRE SUPPRESSION
210553 IDENTIFICATION FOR FIRE SUPPRESSION PIPE AND EQUIPMENT
211100 FIRE PROTECTION PIPING
211316 FIRE PROTECTION

DIVISION 22 – PLUMBING
220529 SUPPORTS AND ANCHORS FOR PLUMBING
220553 IDENTIFICATION FOR PLUMBING PIPE AND EQUIPMENT
220700 PLUMBING INSULATION
221100 WATER PIPING
221119 DOMESTIC WATER PIPING SPECIALTIES
221300 SANITARY PIPING
221319 SANITARY WASTE PIPING SPECIALTIES
221329 SANITARY SEWERAGE PUMPS
221400 STORM DRAINAGE PIPING
221429 SUMP PUMPS
223100 DOMESTIC WATER SOFTENER
223300 WATER HEATERS
224000 PLUMBING FIXTURES

DIVISION 23 – HEATING VENTILATING AND AIR CONDITIONING
230529 SUPPORTS AND ANCHORS FOR HVAC
230553 IDENTIFICATION FOR HVAC PIPE AND EQUIPMENT
230593 TESTING, ADJUSTING & BALANCING FOR HVAC
230720 HVAC DUCTWORK INSULATION
230800 COMMISSIONING OF HVAC
230900 TEMPERATURE CONTROLS
231123 FACILITY NATURAL GAS PIPING/DIGESTER GAS PIPING
233100 DUCTWORK
233300 AIR DUCT ACCESSORIES
233423 FANS
233713 DIFFUSERS, REGISTERS AND GRILLES
233723 HVAC GRAVITY VENTILATORS
235400 FUEL FIRED HEATERS
236200 AIR COOLED CONDENSING UNITS
237313 INDOOR AIR HANDLING UNITS
238126 SPLIT SYSTEM AIR CONDITIONERS

DIVISION 26 – ELECTRICAL
260500 COMMON WORK RESULTS FOR ELECTRICAL
260519 L-V ELECTRIC POWER CONDUCTORS AND CABLES
260523 CONTROL VOLTAGE ELECTRICAL POWER CABLES
260526 GROUNDING AND BONDING FOR ELECTRIC SYSTEMS
260529 HANGERS AND SUPPORTS FOR ELECTRIC SYSTEMS
260533 RACEWAY AND BOXES FOR ELECTRIC SYSTEMS
260553 IDENTIFICATION FOR ELECTRICAL SYSTEMS
260923 LIGHTING CONTROL DEVICES
262416 PANELBOARDS
262726 WIRING DEVICES
262816 ENCLOSED SWITCHES AND CIRCUIT BREAKERS
262913 ENCLOSED CONTROLLERS

264313 TVSS FOR L-V ELECTPOWER CIRCUITS
265100 INTERIOR LIGHTING

DIVISION 27 – COMMUNICATIONS
270500 COMMON WORK RESULTS FOR COMMUNICATIONS
271100 COMMUNICATIONS EQUIPMENT ROOM FITTINGS
271500 COMMUNICATIONS HORIZONTAL CABLING

DIVISION 28 – ELECTRICAL SAFETY AND SECURITY
280500 COMMON WORK RESULTS FOR ELECTRICAL SAFETY AND SECURITY
280513 CONDUCTORS AND CABLE FOR ELECTRICAL SAFETY AND SECURITY
283111 DIGITAL, ADDRESSABLE FIRE-ALARM SYSTEM

DIVISION 31 – EARTHWORK
312000 EARTH MOVING

EXHIBIT LIGHT FIXTURES:
TYPES: GA, GA-1, LA, LB, PA, PB, PC, PD, PF, PG, PH, PJ, PK, PL, PM, PP, PQ, RA, RB, SA, SB, SC, SD, T, TA, TC, WA, WB, WC

LIGHTING FIXTURE SCHEDULE

EXHIBITS:
ATTACHMENT A6 - INSURANCE REQUIREMENTS

DRAWINGS:
TITLE SHEET

S001 STRUCTURAL GENERAL NOTES
S101 FOUNDATION PLAN
S201 LEVEL 2 FRAMING PLAN
S202 LEVEL 3 FRAMING PLAN
S203 UPPER CEILING FRAMING PLAN
S301 FOUNDATION DETAILS
S401 FRAMING DETAILS
S402 FRAMING DETAILS

A000 SCHEDULES AND DETAILS
A001 WALL TYPES, SCHEDULES, AND DETAILS
A100 EXISTING/DEMOLITION LEVEL 1 FLOOR PLAN
A101 EXISTING/DEMOLITION LEVEL 2 FLOOR PLAN
A102 EXISTING/DEMOLITION LEVEL 3 FLOOR PLAN
A103 REVISED LEVEL 1 FLOOR PLAN
A104 REVISED LEVEL 2 FLOOR PLAN
A105 REVISED LEVEL 3 FLOOR PLAN
A106 PARTIAL PLANS
A107 INSULATION LOCATION PLANS
A200 ELEVATIONS
A201 ELEVATIONS
A300 BUILDING SECTIONS
A301 BUILDING SECTIONS
A302 EXISTING/REVISED PARTIAL SECTIONS
A303 EXISTING/REVISED PARTIAL SECTIONS
A304 EXISTING/REVISED PARTIAL SECTIONS/ELEVATIONS
A305 RAMP SECTIONS AND ELEVATIONS (ALT. BID NO. 4)
A400 LEVEL 1 REFLECTED CEILING PLAN
A401 LEVEL 2 REFLECTED CEILING PLAN
A402 LEVEL 3 REFLECTED CEILING PLAN
A500 DETAILS
A600 INTERIOR CASEWORK AND ELEVATIONS
A601 RESTROOM ELEVATIONS AND DETAILS

IF100 REVISED LEVEL 1 INTERIOR FINISHES PLAN
IF101 REVISED LEVEL 2 INTERIOR FINISHES PLAN
IF102 REVISED LEVEL 3 INTERIOR FINISHES PLAN

FP100 FIRE SPRINKLER LEVEL 1
FP101 FIRE SPRINKLER LEVEL 2
FP102 FIRE SPRINKLER LEVEL 3 AND ATTIC PLAN
FP200 FIRE SPRINKLER BUILDING SECTION
FP201 FIRE SPRINKLER BUILDING SECTION

P000 REVISED UNDER FLOOR LEVEL 1 PLUMBING PLAN
P100 REVISED ABOVE FLOOR LEVEL 1 PLUMBING PLAN
P101 REVISED ABOVE FLOOR LEVEL 2 PLUMBING PLAN
P102 REVISED ABOVE FLOOR LEVEL 3 PLUMBING PLAN
P200 PARTIAL SITE PLAN AND DETAILS
P300 EXISTING/DEMOLITION LEVEL 1 PLUMBING PLAN
P301 EXISTING/DEMOLITION LEVEL 2 PLUMBING PLAN
P302 EXISTING/DEMOLITION LEVEL 3 PLUMBING PLAN

H100 REVISED LEVEL 1 HVAC PLANS
H101 REVISED LEVEL 2 HVAC PLANS
H102 REVISED LEVEL 3 HVAC PLANS
H200 HVAC SCHEDULES AND DETAILS
H201 HVAC SECTIONS
H202 HVAC SECTIONS
H300 EXISTING/DEMOLITION LEVEL 1 HVAC PLAN
H301 EXISTING/DEMOLITION LEVEL 2 HVAC PLAN
H302 EXISTING/DEMOLITION LEVEL 3 HVAC PLAN

E101 LEVEL 1 ELECTRICAL DEMOLITION
E102 LEVEL 2 ELECTRICAL DEMOLITION
E103 LEVEL 3 ELECTRICAL DEMOLITION
E111 LEVEL 1 ELECTRICAL PLAN – LIGHTING
E112 LEVEL 2 ELECTRICAL PLAN – LIGHTING
E113 LEVEL 3 ELECTRICAL PLAN – LIGHTING
E121 LEVEL 1 ELECTRICAL PLAN – POWER
E122 LEVEL 2 ELECTRICAL PLAN – POWER
E123 LEVEL 3 ELECTRICAL PLAN – POWER
E131 LEVEL 1 ELECTRICAL PLAN – SYSTEMS
E132 LEVEL 2 ELECTRICAL PLAN – SYSTEMS
E133 LEVEL 3 ELECTRICAL PLAN – SYSTEMS
E200 ONE-LINE & RISER
E201 PANEL SCHEDULES
E300 FIRE ALARM SCHEDULES, RISER AND DETAILS
E301 TELE DATA SPECIFICATIONS AND DETAILS
E302 TELE DATA SCHEDULE AND RISER DIAGRAM
E400 ELECTRICAL DETAILS
E500 LIGHTING FIXTURE SCHEDULE & NOTES
E501 MATERIAL SCHEDULE & NOTES

LL101 LIGHTING LAYOUT – LEVEL 1
LL102 LIGHTING LAYOUT – LEVEL 2
LL103 LIGHTING LAYOUT – LEVEL 3

END OF TABLE OF CONTENTS

SUPPLEMENTARY INSTRUCTIONS TO BIDDERS

1. INSTRUCTIONS TO BIDDERS

A. "Instructions to Bidders", AIA Document A701, 1997 Editions, published by the American Institute of Architects, including revisions adopted before date of this Project Manual, is hereby made part of these specifications with same force and effect as though set forth in full.

B. The following modifies, changes, deletes from or adds to the **Instructions to Bidders** (AIA Document A701, 1997 Edition). Where any Article of the Instructions to Bidders is modified or any Paragraph, Subparagraph or Clause thereof is modified or deleted by these Supplementary Conditions, the unaltered provisions of that Article, Paragraph, Subparagraph or Clause shall remain in effect.

C. Parenthesis ( ) indicates the appropriate section and Subparagraph of the Instructions to Bidders which each paragraph of the Supplementary Instructions to Bidders modifies or refers to.

2. PROJECT DESCRIPTION

A. The Project description generally is as follows:

1. BASE BID:

Complete interior / partial exterior renovation of the Glen Oak Park Pavilion into a Children's Museum. Work scope will include the general trades, mechanical, fire protection, plumbing, electrical, etc.

2. ALTERNATES:

Add Alternate #1: Addition of sand porch exhibit which includes floor structure and framing, aluminum storefront framing and glazing and entrances, floor/wall/ceiling finishes, HVAC systems, plumbing systems, fire protection systems, and all electrical systems regarding this area.

Add Alternate #2: Additional insulation in porch ceiling and existing exterior wall construction per sheet A107.

Add Alternate #3: Exhibit Lighting (Informational bid only). This cost shall be incurred in the base bid but listed under this alternate as an information item only. The exhibit lighting would include all fixtures and suspension/ hanging apparatus. These costs shall include labor and material. See electrical drawings and exhibit lighting drawings.

Add Alternate #4: Exterior Accessible Ramp. Demolition of existing wood ramp and add new concrete ramp, railings and sidewalk per drawings.

Add/Deduct Alternate #5: Replace specified sheetmetal ductwork with fiberglass blanket located in attic, with insulation board duct.

Add Alternate #6: Asbestos Abatement (Informational bid only). This cost shall be incurred in the base bid, but listed under this alternate as an informational item only.

B. PRE-BID MEETING :

1. A pre-bid meeting will be held at the project site Tuesday, April 15, 2014 at 10 :00 a.m. Attendance at Pre-bid meeting is recommended.
2. Minutes : Entity responsible for conducting meeting will record and distribute meeting minutes to attendees. Minutes of meeting are issued as Available Information and do not constitute a modification to the Procurement and Contracting Documents. Modifications to the Procurement and Contracting Documents are issued by written Addendum only.
   a) Sign-in Sheet : Minutes will include list of meeting attendees.
   b) List of Planholders : Minutes will include list of planholders.

3. CODES AND PERMITS

A. COSTS ASSOCIATED WITH REGULATORY COMPLIANCE. All Work performed in connection with this Project shall be in compliance with the requirements of all applicable local, state, and federal laws, regulations, and rules, as well as the requirements of the Construction Documents. The Bid Price shall reflect all costs of compliance to those requirements, whether or not specifically stated in the Construction Documents or specific sections of the Project Manual.

B. PERMITS/FEES. Work shall not commence until all required building (and/or other) permits have been secured by the Contractor and copies of these permits submitted to the Owner's Representative. Cost of permits is to be included in the Bid Price.

4. BID GUARANTY

The bid must be accompanied by a Bid Guaranty which shall not be less than 10% of the amount of the Bid. At the option of the Bidder, the 10% Guaranty may be a Certified Check, Cashier's Check, or a Bid Bond. The Bid Bond shall be secured by a Guaranty or a Surety Company acceptable to the Owner. No bid will be considered unless it is accompanied by the required Guaranty. Funds must be made payable to the order of the Owner. Cash deposits will not be accepted. The Bid Guaranty shall ensure the execution of the Agreement and the furnishing of the Surety Bond or Bonds by the successful Bidder, all as required by the Contract Documents.

5. AWARD OF CONTRACT/REJECTION OF BIDS:

The Contracts will be awarded on the basis of Paragraph 5.3 of the Instructions to Bidders. The Bidders to whom the awards are made will be notified at the earliest possible date. The Owner, however, reserves the right to reject any and all Bids, to accept any combination of base bids and alternates and to waive any technical deficiencies, informalities, or irregularities in Bids received whenever such rejection or waiver is in its interest.

No bid shall be withdrawn for a period of sixty (60) days after the opening of bids without the consent of the Owner. The failure of the Bidder to submit a Bid Bond, Certified Check or Cashier's Check in the full amount to cover all proposals bid upon shall be sufficient cause for rejection of his bid. The award will be made contingent upon submittal and evaluation of Contractor's Qualification Statement, Bonds, Certificate of Insurance, Contractor Certification(s), including Peoria Park District Certificate of Equal Employment Opportunity Compliance for Contractors and Vendors, etc.

6. EXECUTION OF AGREEMENT:

Subsequent to the award and within ten (10) days after the prescribed forms are prepared and presented for signature by the Owner's Representative, the successful Bidder shall execute and return to the Owner's Representative an Agreement in the form included in the Contract Documents in such number of copies as the Owner may require.

7. PERFORMANCE BOND/LABOR AND MATERIAL PAYMENT BOND & INSURANCE

A. **BONDS REQUIRED**. Having satisfied all conditions of award as set forth elsewhere in these Documents, the successful Bidder shall, within ten (10) calendar days after award of contract, furnish Surety Bonds in penal sums, each not less than the amount of the Contract as awarded as security for the faithful performance of the Contract (Performance Bond), and for the payment (Labor and Materials Payment Bond) of all persons, firms or corporations to whom the Contractor may become legally indebted for labor, materials, tools, equipment or services employed or used by him in performing the work.

B. **FORM OF BONDS**. **Such bonds shall be in the same form as the samples included in the Project Manual** and shall bear the same date as or a date subsequent to that of the Agreement. The current Power of Attorney for the person who signs for any Surety Company shall be attached to such Bonds. Bonds shall be signed by a Guaranty or Surety Company acceptable to the Owner.

C. **COST OF PERFORMANCE BOND/LABOR AND MATERIAL PAYMENT BOND**. All costs for the Performance Bond/Labor and Material Payment Bond shall be included in the submitted Bid Price.

D. **INSURANCE.** Insurance requirements for this project are addressed both in the Supplementary General Conditions and in "Attachment A.6", in the "Exhibits" section of this Project Manual.

a) In respect to the property ("builders risk") insurance coverages referenced in the Supplementary General Conditions: the successful Bidder will be required to provide such coverages as the work of the Project will be accomplished by one general contractors.

E. **TIME FRAMES.** The successful Bidder shall, within ten (10) days after award of contract by the Board of Trustees, submit Proof of Insurance coverages/Bonds in the form and amounts required to the Owner's Representative. Should the Bidder be unable to provide the required Proof of Insurance(s)/Bonds within the specified ten day period the Owner reserves the right, at its sole discretion, to withdraw its award of contract from that Bidder.

8. DEFAULT

A. The failure of the successful Bidders to execute the Agreement, supply the required Bonds or proof of required insurance coverage(s) within (ten) 10 days after award of contract, or within such extended period as the Owner may grant based upon reasons determined sufficient by the Owner, may constitute a default. In such case, award of contract will be transferred to the second lowest bidder.

9. CONTRACTOR'S QUALIFICATION STATEMENT

A. Contractor's Qualification Statement (AIA Document 305) shall be submitted by low bidder for evaluation prior to award of contract if so requested by the Owner or his representatives.

10. LIST OF SUBCONTRACTORS/PRODUCT & EQUIPMENT SUBSTITUTIONS

A. Each Bidder shall submit a "MAJOR SUBCONTRACTORS LIST" proposed to be used in the execution of the Work. If there will be no subcontractors, the Bidder shall state "No Subcontractors" on this form. The completed form is due with the Bid Proposal.

1) Identify the trade name, address, telephone number, and category of work of each subcontractor.

2) Failure to submit the "Major Subcontractors List" with the Bid Proposal may result in the rejection of the Bid.

3) Delete Subparagraphs (6.3.1.1) and (6.3.1.2) from AIA A701.

B. The Bidder, by submission of a signed bid form, agrees to install all products and equipment by brand name or names specified in the Technical Specifications sections of this Project Manual. "Or equal" substitutions will be allowed only if approved in writing prior to the bid opening.

1) Procurement Substitution Requests will be received and considered by Owner when the following conditions are satisfied, as determined by Architect; otherwise requests will be returned without action:

a) Extensive revisions to the Contract Documents are not required.
b) Proposed changes are in keeping with the general intent of the Contract Documents, including, the level of quality of the Work represented by the requirements therein.
c) The request is fully documented and properly submitted.

2) Procurement Substitution Request: Submit to Architect. Procurement Substitution Request must be made in writing by prime contract Bidder only in compliance with the following requirements:

a) Requests for substitution of materials and equipment will be considered if received no later than ten days prior to date of bid opening.

b) Submittal Format: Submit three copies of each written Procurement Substitution Request, using CSI Substitution Request Form 1.5C.

3) Architect's Action:

a) Architect may request additional information or documentation necessary for evaluation of the Procurement Substitution Request. Architect will notify all bidders of acceptance of the proposed substitute by means of an Addendum to the Procurement and Contracting Documents.

4) Architect's approval of a substitute during bidding does not relieve Contractor of the responsibility to submit required shop drawings and to comply with all other requirements of the Contract Documents.

11. CONTRACT ADMINISTRATION FORMS/COSTS OF FORMS

A. **REQUIRED FORMS**. The following AIA forms will be used (AIA forms will be supplied by the Owner if requested, and charged to the Contractor at cost) in the administration of the project:

1) **AIA Document A310**: "Bid Bond", February 1970 edition

2) **AIA Document A305**: "Contractor's Qualification Statement", 1986 edition

3) **AIA Document G702**: "Application and Certificate of Payment", May 1992 edition

4) **AIA Document G703**: "Continuation Sheet", May 1992 edition

B. **OTHER FORMS**. Other contract administration forms (to be provided by the Owner unless otherwise noted) required for use in the Project are:

1) **Major Subcontractors List**

2) **Contractor's Affidavit**

3) **Individual Contractor Form**

4) **Corporate or Partnership Form**

5) **Performance Bond**

6) **Labor and Material Payment Bond**

7) **Lien Waiver Forms**

8) **Weekly Workforce Report**

9) **Certified Payroll Form** (Contractor may use own form)

10) **Insurance Forms: As required in Attachment A (at end of Project Manual)** (will not be provided by Owner)

11) **Agreement Between Owner and Contractor**

Examples of these forms are included in the Project Manual.

12. CONSTRUCTION TIME AND LIQUIDATED DAMAGES CLAUSE:

2.51 **PROJECT COMPLETION**. The Agreement will include the following paragraph(s) or language substantially the same, regarding construction time and liquidated damages:

1) LIQUIDATED DAMAGES: Owner and Contractor recognize that time is of the essence of this Agreement and that Owner will suffer financial loss if the Work is not Substantially Complete within the time specified below, plus any extensions thereof allowed in accordance with Article 8 of the General Conditions. They also recognize the delays, expense and difficulties involved in proving in a legal or arbitration proceeding the actual loss suffered by Owner if the Work is not completed on time.

2) Accordingly, instead of requiring any such proof, Owner and Contractor agree that as Liquidated Damages for delay (but not as a penalty) Contractor shall pay Owner TWO HUNDRED AND FIFTY DOLLARS ($250.00) for each calendar day that expires after two hundred fifty-nine (259) calendar days from Notice of Award until Substantial Completion is attained. The work is tentatively scheduled to begin on May 15, 2014 and be at Substantial Completion by January 28, 2015.

3) After Substantial Completion, if Contractor shall neglect, refuse, or fail to complete the remaining Work necessary to achieve Final Completion within thirty (30) calendar days or any proper extension thereof granted by Owner, Contractor shall pay Owner two hundred fifty dollars ($250.00) for each day that expires after the time specified.

4) Owner and Contractor agree that the per day liquidated damage amounts set forth in subparagraphs "2" and "3" of this section constitute a reasonable forecast of the financial losses, actual costs and increased expenses the Owner may incur as a result of delayed Substantial or Final Completion of the Project.

13. PROJECT MANUAL/PLANS & SITE VISITATION

A. A set of Bid Documents may be examined, at no charge, at the office of the Owner's Representative.

B. **PLAN DEPOSIT**. An electronic file including Bid Documents is available at www.peoriaparks-planning.org at no charge. A printed set of Bid Documents, including Plans, Specifications and Interpretations for this project may be obtained at the Planning, Design & Construction Department, Bradley Park Equipment Service, 1314 N. Park Road, Peoria, IL 61604. Telephone (309)686-3386. A non-refundable plan deposit of $150.00 will be charged for each printed set of Bid Documents.

C. **FAMILIARITY WITH BID DOCUMENTS & SITE VISITATION**. Bidders, by submission of their Bids, represent that they have visited the site to acquaint themselves with the local conditions in which the Work is to occur, and that they are familiar with all the requirements of the Project, as defined in the Project Manual and the Plan(s).

14. OTHER MODIFICATIONS TO AIA-701/OTHER CONDITIONS

A. Add the following sentence to **(4.1.7**): "Bidder shall submit two (2) completed copies of Bid Form and retain one (1) copy for his files."

B. Delete Section **(6.2)** - "Owner's Financial Capability"; and last sentence of Paragraph **(4.2.1.)**

C. In reference to (**7.2.1**), the Peoria Park District reserves the right of final approval of bonding companies.

D. Delete paragraph **(7.1.3).**

15. EQUAL EMPLOYMENT OPPORTUNITY/AFFIRMATIVE ACTION/SEXUAL HARASSMENT

A. The "Peoria Park District Certificate of Equal Employment Opportunity Compliance for Contractors and Vendors Form" and "Workforce Profile" and "Sexual Harassment Policy" shall be filled out and returned with the Bid. Failure to submit a completed "Peoria Park District Certificate of Equal Employment Opportunity Compliance for Contractors and Vendors Form" and "Workforce Profile" and "Sexual Harassment Policy" may result in rejection of the bid.

B. Effective July 1, 1993, every party to a public contract and every party bidding on public contracts is required to have a written **"Sexual Harassment Policy"** that contains:

1) A definition of sexual harassment under state law;

2) A description of sexual harassment utilizing examples;

3) A formalized complaint procedure;

4) A statement of victim's rights;

5) Directions on how to contact the Illinois Department of Human Rights **- Illinois companies**. Out-of-State companies must include directions on how to contact the enforcement agency within their state. Companies that issue a standard policy for all business locations must prepare an addendum providing directions on how to contact the appropriate enforcement agency.

6) A recitation that there cannot be any retaliation against employees who elect to file charges.

Recommendation: Your **"Sexual Harassment Policy"** should be drafted in language easy to understand and any revisions should be reviewed by legal counsel. A copy of your policy should be posted in a prominent and accessible location to assure all employees will be notified of the company's position.

In order to conduct business with the Peoria Park District, you must have a written "Sexual Harassment Policy" that conforms to the new Act.

FAILURE TO DO SO WILL DISQUALIFY YOU AS AN ELIGIBLE VENDOR.

C. Lowest responsible bidder not meeting the Park District's goal of 12% for minority/women participation, must provide proof of efforts made in contacting an adequate number of minority and women owned firms and/or labor.

16. BID SUBMISSION

A. **DATE, TIME & PLACE OF RECEIVING BIDS**. Bids will be received until the date and time listed in the "Advertisement for Bids", at which time they will be publicly opened, read aloud and recorded. The Bid Opening will be held at the place listed in the "Advertisement for Bids".

B. **REQUIRED ITEMS**. The following items must be included as part of the "BID":

1) Two (2) signed copies of the **BID FORM**. (Retain the third copy for your files.)

2) The **PEORIA PARK DISTRICT CERTIFICATE OF EQUAL EMPLOYMENT OPPORTUNITY COMPLIANCE FOR CONTRACTORS AND VENDORS FORM** and **SEXUAL HARASSMENT POLICY.**

3) The **WORKFORCE PROFILE.**

4) The **ILLINOIS DRUG FREE WORKPLACE CERTIFICATION**.

5) The **CONTRACTOR CERTIFICATION** (individual or corporate/partnership).

6) The **LIST OF SUBCONTRACTORS**. (Submit form and state "No Subcontractors" on the form, if none will be used.)

7) The **BID GUARANTY.**

8) The **CERTIFICATION OF SAFETY COMPLIANCE.**

9) **SUBSTANCE ABUSE PREVENTION PROGRAM CERTIFICATION**

C. **BID SUBMISSION**. The "BID" shall be enclosed in envelopes (outer and inner), both of which shall be sealed and clearly labeled with the following information, in order to prevent premature opening of the bid:

- "PROPOSAL"
- NAME OF PROJECT
- NAME OF BIDDER
- DATE/TIME OF BID OPENING

END OF SUPPLEMENTARY INSTRUCTIONS TO BIDDERS

Bid From: _____

PROJECT NO. 04-040
BID FOR: PEORIA PLAYHOUSE
CHILDREN'S MUSEUM
LOCATION: GLEN OAK PARK

BID FORM

BID TO: PEORIA PARK DISTRICT

UNDERSIGNED:

1. Acknowledges receipt of:

   A. Project Manual and Drawings for:

      Peoria Playhouse Children's Museum

   B. Addenda: No. _____ through No. _____

2. Has examined facility and the bid documents and shall be responsible for performing work specifically required of him by all parts of bidding documents including specifications for entire project, even though such work may be included as related requirements specified in other divisions or sections.

3. And agrees to enter into and execute Contract with Owner, if awarded on basis of this bid, and to:

   A. Furnish Bonds and Insurance required by the Bidding & Contract Documents.

   B. Accomplish work in accord with Contract.

   C. Complete work within specified Contract time.

4. **CONTRACT TIME**: Contractor agrees to Substantially Complete ALL WORK as required by the Contract Documents per the Supplementary General Conditions and Supplementary Instructions to Bidders.

5. **BASE BIDS**:
   A. Base Bid:
   Bidder agrees to perform all building and site work, as set forth in the Project Manual and Drawings for the sum of:

   _____ Dollars ($_____._____)

6. **ALTERNATES:**
   Bidder agrees to perform all building and/or site work items as set forth below. The prices submitted may be accepted either at the time of Base Bid approval or up to no later than ninety (90) days after award of the Bid; however, if not approved at the time of the award of the Base Bid, the contract times as set forth in the Project Manual and Drawings will be adjusted to compensate for the additional time taken in award of the Alternate:

A. Add Alternate #1:
Addition of sand porch exhibit which includes floor structure and framing, aluminum storefront framing and glazing and entrance, floor/wall/ceiling finishes, HVAC systems, plumbing systems, fire protection systems, and all electrical systems regarding this area.

_____ Dollars ($_____._____)

B. Add Alternate #2:
Additional insulation in porch ceiling and existing exterior wall construction per sheet A107.

_____ Dollars ($_____._____)

C, Add Alternate #3:
Exhibit Lighting (Information bid only). This cost shall be incurred in the base bid but listed under this alternate as an information item only. The exhibit lighting would include all fixtures and suspension/hanging
apparatus. These costs shall include labor and material. See electrical drawings and exhibit lighting drawings.

_____ Dollars ($_____._____)

D. Add Alternate #4: Exterior Accessible Ramp. Demolition of existing wood ramp and add new concrete ramp, railings and sidewalk per drawings.

_____ Dollars ($_____._____)

E. Add/Deduct Alternate #5: Replace specified sheetmetal ductwork with fiberglass blanket located in attic, with insulation board duct.

_____ Dollars ($_____._____)

F. Add Alternate #6: Asbestos Abatement (Information bid only). This cost shall be incurred in the base bid, but listed under this alternate as an informational item only.

_____ Dollars ($_____._____)

7. **UNIT PRICES**:
A. Bidders submitting prices for the Base Bid shall submit Unit Prices for adding or deleting work. Unit Prices shall include all costs, including but not limited to preparation, labor, equipment, and materials necessary for a complete installation.

ITEM	UNIT	UNIT PRICE
Install plywood 4' x 8' panel for blocking at stud wall	4 x 8	$_____

Install 2 x 4 wood blocking at stud wall	16" L. 2 x 4	$_____
Demo plaster and lath wall/ceiling construction	S.F.	$_____
Repair plaster and lath wall construction	S.F.	$_____
Repair plaster and lath ceiling construction	S.F.	$_____
Sister a 2 x 8 wood joist ~20' long to an existing porch ceiling joist/rafter. See detail 3/S401.	Ea. 2 x 8	$_____
Sister a 1 ¾" x 14" LVL ~20' long to an existing floor joist. See detail 3/S401.	Ea. LVL	$_____
Sister a 2 x 10 wood joist ~20' long to an existing floor/ ceiling joist. See detail 3/S401.	Ea. 2 x 10	$_____
Sister a 2 x 12 wood joist ~20' long to an existing floor/ ceiling joist. See detail 3/S401.	Ea. 2 x 12	$_____
Sister a 1 ¾" x 9 ½" LVL ~20' long to an existing floor/ ceiling joist. See detail 3/S401.	Ea. LVL	$_____

8. **PROPOSED SUBSTITUTION LIST:**

Base Bid(s) and Alternates are understood to include only those product brands, items, and elements which are specified in the Bid Documents. The following is a list of substitute products, equipment or methods of construction which the Bidder proposes to furnish on this project, with difference in price being added or deducted from Base Bid(s).

Bidder understands that acceptance of any proposed substitution which has not been approved as an "equal" to the product brand, item, or element specified prior to bid opening is at Owner's option. Approval or rejection of any substitutions listed below will be indicated before executing Contract.

ITEM	ADD	DEDUCT
_____	$_____	$_____
_____	$_____	$_____
_____	$_____	$_____

9. **BIDDERS CHECKLIST:**

Did you visit the site?	Yes	No
Is Bid Security enclosed? (If applicable)	Yes	No

Is Peoria Park District Certificate of Equal Employment Opportunity Compliance for Contractors and Vendors and Sexual Harassment Policy enclosed?	Yes	No
Is Workforce Profile enclosed?	Yes	No
Is List of Subcontractors enclosed?	Yes	No
Is Contractor Certification enclosed?	Yes	No
Is Ill. Drug Free Workplace Certification enclosed?	Yes	No
Is Certificate of Safety Compliance enclosed?	Yes	No
Is Substance Abuse Prevention Program Certification enclosed?	Yes	No

10. **BIDDER INFORMATION**:

NAME OF BIDDER:_____

ADDRESS: _____

CITY, STATE, ZIP: _____

TELEPHONE NO.: _____

BY: _____
(Signature of Authorized Official)

TITLE: _____

BIDDER'S SEAL

WITNESS: _____

END OF BID FORM

Office Use Only:
Approved: _____
Date: _____

Peoria Park District

Certificate of Equal Employment Opportunity Compliance
for
Contractors and Vendors

Disclosure of the information requested in this form is required by the Peoria Park District. Failure to properly complete and sign this form will result in it being returned unprocessed thereby resulting in a delay or denial of eligibility to bid.

As part of the Company's commitment to equal employment opportunity practices, this company does the following:

- Recruits, trains, upgrades, promotes and disciplines persons without regard to race, color, sex, religion, national origin, veteran status, age, mental or physical ability.
- Notifies all recruitment sources that all qualified applicants will be considered for employment without regard to race, color, sex, religion, national origin, veteran status, age, mental or physical ability.
- When advertising is used, specifies that all qualified applicants will be considered for employment without regard to race, color, sex, religion, national origin, veteran status, age, mental or physical ability.
- Notifies all labor organizations which furnish this company with any skilled or non-skilled labor of the Company's responsibility to comply with the equal employment opportunity requirements required in all contracts by the
  Peoria Park District.
- Notifies all of its sub-contractors of their obligation to comply with the equal employment opportunity requirements required in all contracts by the Peoria Park District.
- Has an affirmative action program that assures the company's fair employment practices are understood and carried out by all of its managerial, administrative and supervisory personnel.

Is the Company a minority/woman owned business (MBE/WBE)? ____YES ____ NO

The Company does not discriminate against any employees or applicants for employment because of race, color, religion, sex, national origin, veteran status, age, mental or physical ability.

The Company does not maintain segregated facilities for any of its employees on the basis of race, religion, color, national origin, because of habit, local custom, or otherwise.

By signing this form, the Company attests that it complies with all statements listed above as part of the Company's commitment to equal employment opportunity practices. The Company further agrees that it has completed the attached Workforce Profile Sheet truthfully, to the best of its knowledge.

_____	_____
Company Name	Company Address
_____	_____
Signature of Company Official	Name / Title
_____	_____
Telephone Number & Fax Number	Email Address

WORKFORCE PROFILE - FULL TIME ONLY

Job Classifications	Total Employees		Black		Hispanic		Native American		Asian		Veteran		Disabled	
	M	F	M	F	M	F	M	F	M	F	M	F	M	F
1. Officials, Managers, Supervisors														
2. Professionals														
3. Technicians														
4. Sales														
5. Office/Clerical														
6. White Collar Trainees:														
7. Skilled Crafts:														
8. Apprentices:														
9. On-the-job Trainees:														
10. Semi-skilled														
11. Service Workers														
12. Unskilled														
TOTALS														

WORKFORCE PROFILE INSTRUCTIONS

RACE/ETHNIC IDENTIFICATION

WHITE (not of Hispanic origin): All persons having origins in any of the original peoples of Europe, North Africa, or the Middle East.

BLACK (not of Hispanic origin): All persons having origins in any of the Black racial groups of Africa.

HISPANIC: All persons of Mexican, Puerto Rican, Cuban, Central or South American, or other Spanish culture or origin, regardless of race.

ASIAN or PACIFIC ISLANDER: All persons having origins in any of the original peoples of the Far East, Southeast Asia, the Indian Subcontinent, or the Pacific Islands. This area includes, for example, China, India, Japan, Korea, the Philippine Islands, and Samoa.

NATIVE AMERICAN or ALASKAN NATIVE: All persons having origins in any of the original peoples of North America, and who maintain cultural identification through tribal affiliation or community recognition.

DESCRIPTION OF JOB CLASSIFICATIONS

OFFICIALS, MANAGERS, AND SUPERVISORS - Occupations requiring administrative personnel who set broad policies, and exercise over-all responsibility for the execution of these policies, and direct individual departments or special phases of a firm's operations. Includes: officials, executives, middle management, plant managers, department managers/superintendents, salaried foremen who are members of management, purchasing agents and buyers, and kindred workers.

PROFESSIONALS - Occupations requiring either college graduation or experience of such kind and amount as to provide a comparable background. Includes: accountants/auditors, airplane pilots and navigators, architects, artists, chemists, designers, dietitians, editors, engineers, lawyers, librarians, mathematicians, natural scientists, personnel and labor relations workers, physical scientists, physicians, social scientists, teachers, and kindred workers.

TECHNICIANS - Occupations requiring combination of basic scientific knowledge and manual skill which can be obtained through about 2 years of post high school education, such as is offered in many technical institutes and junior colleges, or through equivalent on-the-job training. Includes: drafters, engineering aids, junior engineers, scientific assistants, surveyors, technical illustrators, technicians (medical, dental, electronic physical sciences), and kindred workers.

SALES WORKERS - Occupations engaging wholly or primarily in direct selling. Includes: advertising agents/salespersons, insurance agents/brokers, real estate agents/brokers, stock and bond salespersons, demonstrators, salespersons and sales clerks, and kindred workers.

OFFICE AND CLERICAL WORKERS - Includes all clerical type work regardless of level of difficulty, where the activities are predominantly non-manual though some manual work not directly involved with altering or transporting the products is included. Includes: bookkeepers, cashiers, collectors (bills and accounts), messengers and office couriers, office machine operators, shipping and receiving clerks, stenographers, typist and secretaries, telegraph and telephone operators, and kindred workers.

WHITE COLLAR TRAINEES - Persons engaged in formal training for official, managerial, professional, technical, sales, office and clerical occupations.

SKILLED CRAFTS - Manual worker of relatively high skill level having a thorough and comprehensive knowledge of the processes involved in their work. Exercise considerable independent judgment and usually receive an extensive period of training. Includes: the building trades hourly paid foremen and leadmen who are not members of management, mechanics and repairmen,

skilled machining occupations, compositors and typesetters, electricians, engravers, job setters (metal), motion picture projectionists, pattern and model makers, stationary engineers, tailors and tailoresses, and kindred workers.

APPRENTICES - Persons employed in a program including work training and related instruction to learn a trade or craft which is traditionally considered an apprenticeship, regardless of whether the program is registered with a Federal or State agency.

ON-THE-JOB TRAINEES - Persons engaged in formal training for craftsmen when not trained under apprentice programs; semi-skilled, unskilled and service occupations.

SEMI-SKILLED WORKERS - Workers who operate machine or processing equipment or perform other factory-type duties of intermediate skill level which can be mastered in a few weeks and require only limited training.

SERVICE WORKERS - Workers in both protective and non-protective service occupations. Includes: attendants (hospital and other institution, professional and personal service), barbers, charwomen and cleaners, cooks (except household), counter and fountain workers, elevator operators, fire fighters, guards, watchmen and doorkeepers, stewards, janitors, police officers and detectives, porters, waiters and waitresses, and kindred workers.

UNSKILLED WORKERS - Workers in manual occupations which generally require no special training. Perform elementary duties that may be learned in a few days and require the application of little or no independent judgement. Includes: garage laborers, car washers and greasers, gardeners (except farm) and groundskeepers, longshoremen and stevedores, lumbermen, craftsmen and wood choppers, laborers performing lifting, digging, mixing loading and pulling operations, and kindred workers.

P L E A S E B E A D V I S E D !

Every party to a public contract and every party bidding on public contracts are required to have a written sexual harassment policy that contains:

(1) a definition of sexual harassment under state law:

(2) a description of sexual harassment utilizing examples;

(3) a formalized complaint procedure;

(4) a statement of victims rights;

(5) directions on how to contact the Illinois Department of Human Rights – **Illinois companies. Out-of-State** companies must include directions on how to contact the enforcement agency within their state. Companies that issue a standard policy for all business locations must prepare an addendum providing directions on how to contact the appropriate enforcement agency.

(6) a recitation that there cannot be any retaliation against employees who elect to file charges.

Recommendation: Your sexual harassment policy should be drafted in language easy to understand and any revisions should be reviewed by legal counsel. A copy of your policy should be posted in a prominent and accessible location to assure all employees will be notified of the company's position.

In order to conduct business with the PEORIA PARK DISTRICT, you must have a written sexual harassment policy that conforms to the new ACT.

FAILURE TO DO SO
WILL DISQUALIFY YOU AS AN ELIGIBLE VENDOR!!!

Please be advised, effective July 1, 1993, Governor Jim Edgar established under Executive Order Number 7 (Public Act 87-1257) that every party to a public contract and every party bidding on a public contract within the State of Illinois must have a written policy statement prohibiting sexual harassment. The following model policy statement is a draft copy provided for use in formulating your company's policy statement

---

SEXUAL HARASSMENT POLICY STATEMENT

It is the responsibility of each individual employee to refrain from sexual harassment and it is the right of each individual employee to work in an environment free from sexual harassment.

DEFINITION OF SEXUAL HARASSMENT
According to the Illinois Human Rights Act, sexual harassment is defined as:

Any unwelcome sexual advances or requests for sexual favors or any conduct of a sexual nature when

1. submission to such conduct is made either explicitly or implicitly a term or condition of an individual's employment;
2. submission to or rejection of such conduct by an individual is used as the basis for employment decision(s) affecting such individual; or
3. such conduct has the purpose or effect of substantially interfering with an individual's work performance or creating an intimidating, hostile, or offensive working environment.

The courts have determined that sexual harassment is a form of discrimination under Title VII of the U.S. Civil Rights act of 1964, as amended in 1991. One such example is a case where a qualified individual is denied employment opportunities and benefits that are, instead, awarded to an individual who submits (voluntarily or under coercion) to sexual advances or sexual favors. Another example is where an individual must submit to unwelcome sexual conduct in order to receive an employment opportunity.

DRAFT

Other conduct commonly considered to be sexual harassment includes:

⇒ Verbal: Sexual innuendoes, suggestive comments, insults, humor and jokes about sex, anatomy or gender-specific traits, sexual propositions, threats, repeated requests for dates, or statement about other employees, even outside of their presence, of a sexual nature.

⇒ Non-Verbal: Suggestive or insulting sounds (whistling), leering, obscene gestures, sexually suggestive bodily gestures, "catcalls", "smacking" or "kissing" noises.

⇒ Visual: Posters, signs, pin-ups, slogans of a sexual nature.

⇒ Physical: Touching, unwelcome hugging or kissing, pinching, brushing the body, coerced sexual intercourse or actual assault.

Sexual harassment most frequently involves a man harassing a woman. However, it can also involve a woman harassing a man or harassment between members of the same gender.

The most severe and overt forms of sexual harassment are easier to determine; however, some sexual harassment is more subtle and depends to some extent on individual perception and interpretation. The trend in the courts is to assess sexual harassment by a standard of what would offend a "reasonable woman" or a "reasonable man", depending upon the gender of the alleged victim.

An example of the most subtle form of sexual harassment is the use of endearments. The use of terms such as "honey", "darling", and "sweetheart" is objectionable to many women who believe that these terms undermine their authority and their ability to deal with men on an equal and professional level.

Another example is the use of a compliment that could potentially be interpreted as sexual in nature. Below are three statements that might be made about the appearance of a woman in the workplace:

- ⇒ "That's an attractive dress you have on."
- ⇒ "That's an attractive dress. It really looks good on you."
- ⇒ "That's an attractive dress. You really fill it out well."

The first statement appears to be simply a compliment. The last is most likely to be perceived as sexual harassment depending on individual perceptions and values. To avoid the possibility of offending an employee, it is best to follow a course of conduct above reproach, or to err on the side of caution.

RESPONSIBILITY OF INDIVIDUAL EMPLOYEES

Each individual employee has the responsibility to refrain from sexual harassment in the workplace. An individual employee who harasses a fellow worker is, of course, liable for his or her individual conduct. The harassing employee will be subject to disciplinary action up to and including discharge in accordance with company/organization policy or a collective bargaining agreement, as appropriate.

RESPONSIBILITY OF SUPERVISORY PERSONNEL

Each supervisor is responsible for maintaining a workplace free of sexual harassment. This is accomplished by promoting a professional environment and by dealing with sexual harassment as with all other forms of employee misconduct.

The courts have found companies/organizations as well as supervisors can be held liable for damages related to sexual harassment by a manager, supervisor, employee, or third party (an individual who is not an employee but does business with a company/organization, such as a contractor, customer, sales representative, or repair person).

Liability is based either on a company/organization's responsibility to maintain a certain level of order and discipline, or on the supervisor acting as an agent of the company/organization. As such, supervisors must act quickly and responsibly, not only to minimize their own liability, but also that of the company/organization.

DRAFT

RESOLUTION OUTSIDE THE COMPANY/ORGANIZATION

It is hoped that most sexual harassment complaints and incidents can be resolved within a company/organization. However, an employee has the right to contact the Illinois Department of Human Rights (IDHR) or the U.S. Equal Employment Opportunity Commission (EEOC) about filing a formal complaint. An IDHR complaint must be filed within 180 days of the alleged incident(s) unless it is a continuing offense. A complaint with EEOC must be filed within 300 days.

Illinois Department of Human Rights
(217) 785-5100 – Springfield
(217) 785-5125 – TDD Springfield
(312) 814-6200 – Chicago
(312) 263-1579 – TDD Chicago

Illinois Human Rights Commission
(217) 785-4350 – Springfield
(217) 785-5125 – TDD Springfield
(312) 814-6269 – Chicago
(312) 814-4760 – TDD Chicago

U.S. Equal Employment Opportunity Commission
(312) 353-2613 – Chicago District Office
(800) 669-4000 – Toll Free Within State of Illinois
(800) 669-6820 – TDD Chicago

An employee who is suddenly transferred to a lower paying job or passed for promotion, after filing a complaint with IDHR or EEOC, may file a retaliation charge, also due 180 days (IDHR) or 300 days (EEOC) from the alleged retaliation.

An employee who has been physically harassed or threatened while on the job may also have grounds for criminal charges of assault and battery.

FALSE AND FRIVOLOUS COMPLAINTS

False and frivolous charges refer to cases where the accuser is using a sexual complaint to accomplish some end other than stopping sexual harassment. It does not refer to charges made in good faith which cannot be proven. Given the seriousness of the consequences for the accused, a false and frivolous charge is a severe offense that can itself result in disciplinary action.

ILLINOIS DRUG FREE WORKPLACE CERTIFICATION

The undersigned Contractor/Vendor hereby certifies that it will comply with all provisions of the Illinois Drug Free Workplace Act of 1991.

Dated this _____ day of _____, 20 _____

Contractor/Vendor

_____

By: _____

SUBSTANCE ABUSE PREVENTION PROGRAM CERTIFICATION

Project Name:_____

Location:_____

The Substance Abuse Prevention on Public Works Act Public Act 95-0635, prohibits the use of drugs and alcohol, as defined in the Act, by employees of the Contractor and by employees of all approved Subcontractors while performing work on a public works project. The Contractor/Subcontractor herewith certifies that it has a superseding collective bargaining agreement or makes the public filing of its written substance abuse prevention program for the prevention of substance abuse among its employees who are not covered by a collective bargaining agreement dealing with the subject as mandated by the Act.

A.The undersigned representative of the Contractor/Subcontractor certifies that the contracting entity has signed collective bargaining agreements that are in effect for all of its employees, and that deal with the subject matter of Public Act 95-0635.

_____
Contractor/Subcontractor

_____
Name of Authorized Representative (type or print)

_____
Title of Authorized Representative (type or print)

_____
Signature of Authorized RepresentativeDate

B.The undersigned representative of the Contractor/Subcontractor certifies that the contracting entity has in place, for all of its employees not covered by a collective bargaining agreement that deals with the subject of the Act, the attached substance abuse prevention program that meets or exceeds the requirements of Public Act 95-0635.

_____
Contractor/Subcontractor

_____
Name of Authorized Representative (type or print)

_____
Title of Authorized Representative (type or print)

_____
Signature of Authorized RepresentativeDate

CERTIFICATION OF SAFETY COMPLIANCE

The undersigned Contractor/Vendor hereby certify that they and their sub-contractors will comply with any and all prevailing occupational safety and health standards including, but not limited to the following: hazard communication, hearing conservation, respirator use, permit required confined space entry, scaffolding, personal protective equipment, ladder usage, ventilation, flammable and combustible liquids handling and storage and lockout/tagout. Such compliance may include a training component or require a written program of compliance.

Dated this day of _____, 20 _____.

CONTRACTOR/VENDOR: _____

By: _____

PLEASURE DRIVEWAY AND PARK DISTRICT

OF PEORIA, ILLINOIS

Individual Contractor Form

CONTRACTOR CERTIFICATION

I, _____, do hereby certify that I am a contractor who has not been barred from bidding on a public contract as a result of a violation of either Section 33E-3 (bid-rigging) or Section 33E-4(bid rotating) of the Illinois Criminal Code, Illinois Compiled Statutes 720 ILCS 5/33E-3 and 5/33E-4.

_____
Contractor

By: _____

Subscribed and Sworn before me this _____ day of _____, 20____

_____
Notary Public

My Commission Expires _____, 20_____

PLEASURE DRIVEWAY AND PARK DISTRICT

OF PEORIA, ILLINOIS

Corporate or Partnership Contractor Form

CONTRACTOR CERTIFICATION

I, _____, a duly authorized agent of
(Agent)

_____, do hereby certify that neither
(Contractor)

_____, nor any individual presently
(Contractor)

affiliated with _____, has been barred from
(Contractor)

bidding on a public contract as a result of a violation of either Section 33E-3 (bid-rigging) or Section 33E-4 (bid rotating) of the Illinois Criminal Code, Illinois Compiled Statutes, 720 ILCS 5/33E-3 and 5/33E-4.

_____
Contractor

By: _____

Subscribed and Sworn before me this _____ day of _____, 20____

_____
Notary Public

My Commission Expires _____, 20_____

MAJOR SUBCONTRACTORS LIST

The following tabulation of Major Subcontractors shall be attached and made a condition of the Bid. The Bidder expressly understands and agrees to the following provisions:

A. If awarded a Contract as a result of this Bid, the major subcontractors used in the prosecution of the work will be those listed below.
B. The following list includes all subcontractors who will perform work representing 5% (five percent) or more of the total Base Bid.
C. The subcontractors listed below are financially responsible and are qualified to perform the work required.
D. The subcontractors listed below comply with the requirements of the Contract Documents.
E. Any substitutions in the subcontractors listed below shall be requested in writing by the Contractor and must be approved in writing by the Owner. No sub-subcontractors will be allowed unless specifically stated on the form. All pertinent financial, performance, insurance and other applicable information shall be submitted with the request for substitution(s). Owner shall respond to such requests within 14 calendar days following the submission of all necessary information to the full satisfaction of the Owner.
F. Failure to submit the list of Major Subcontractors as stated herein shall constitute a material variation from the Invitation to Bid; and any such Bid may be rejected by the Owner.

Subcontractor Name	Address	Telephone	Area of Work	Minority/Women Owned Business (Yes/No)

(Attach additional sheets if required)

END OF MAJOR SUBCONTRACTORS FORM

Directory of Minority & Women Owned Business Enterprises
Compiled with Information from
City of Peoria Equal Opportunity Office
Peoria Housing Authority
Peoria Park District

Revised 11/13

Absolute Risk Management Strategies Kelly Peterson	MBE Construction Safety, Job Site Safety Plan Development, Job Site Risk Assessment, Construction OSHA Training 416 Main St., Suite 533, Peoria, IL 61602	309-256-8471 309-222-4050 Cell
Adams Septic & Sewer Services, Inc. Michelle Adams	WBE Septic and Sewer Contractor 1641 N. Tiber Ridge Ct., East Peoria, IL 61611	309-691-6113
Aerial Work Services Company	MBE Landscaping and Seeding 13805 Wadsworth Road, Wadsworth, IL	847-662-5321 847-662-5321 Fax
AFE Construction, Inc. Tommy and Monica Arbuckle	WBE General Contractor WBE P.O. Box 199, Mackinaw, IL 61755	309-303-7065 866- 491-2209 Fax
A & L Salvage, Inc. Archie Brown	MBE Clean Up, Tree Cutting & Removal, Truck Salvaging 824 W. Brons Peoria, IL 61604	309-682-4412
Alexander Brothers Construction Co. Allester Alexander	MBE Concrete, Demolition, Excavation, Landscaping P.O. Box 1508, Peoria, IL 61605	309-673-6768
A. Lucas & Sons Steel Margaret Hanley	WBE Structural Steel Fabrication 1328 SW Washington, Peoria, IL 61602	309-673-8547 309-673-7213 Fax
Ambri Inc. Robert J. Hunt. Jr.	MBE Drywall, Flooring, Painting, Cabinetry 9101 S. Nashville Ave., Oak Lawn, IL 60453	708-233-0217 Ph and Fax
Atherton, P.A. Patricia Atherton	WBE Asphalt, Concrete, Demolition, Excavation 57 Eichorn Road, Spring Bay, IL 61611	309-822-8575 309-822-8782 Fax
A Unique Maintenance Service Andrea McKnight	MBE Commercial and Industrial Construction Cleanup 2101 N. North St., Peoria, IL 61604	309-685-7197 309-685-4472 Fax
BJB Enterprises, Inc. Jim Bryant	MBE Concrete, Demolition, Excavation, General, Landscaping, Trucking/Hauling 1220 SW Washington St., Peoria, IL 61602	309-671-4415 Ph 309-673-4308 Fax
Braun Excavating, Inc. Teresa Braun	WBE Demolition, Digging of Footings, Excavation, Pipe Laying 24 Gulf Stream Bartonville, IL 61607	309-697-5454 309-697-6567 Fax
Brown, Leo Trucking, Inc. Leo Brown	MBE Trucking/Hauling P. O. Box 9057, Peoria, IL 61612	309-685-6710 309-685-0759 Fax
Buddy's Landscaping Dexter Davis	MBE Landscaping P. O. Box 1836, Bloomington, IL 61702	309-824-9211 309-454-3342 Fax
Capitol Trucking Eddie Washington	MBE Janitorial Service, Snow Removal, Trucking 2803 Creston Ln., Peoria, IL 61604	309-679-9388 309-339-5313 Cell
Central IL Construction Inc. Jessica Youngman	WBE Land Surveying 416 Germantown Rd., Germantown, IL 61548	309-383-3156
Central IL Rebar Insulators Roger Fleming	MBE Structural Steel and Rebar Replacement 4719 Ridgelawn, Peoria, IL 61615	309-258-1379 888-387-5716 Fax
Central Landscaping Donna Brandenburg	WBE Landscaping 12512 Mendell Rd., Princeville, IL 61559	309-385-4832 309-385-2644 Fax
CJL Landscaping, Inc. Rebecca J. Kelch	WBE Landscaping 10902 W. U. S. Highway 150, Brimfield, IL 61517	309-691-9200 309-691-5131 Fax

C & L Construction & Roofing Co. Jeanette Burns	WBE Roofing, Electrical, Plumbing P.O. Box 416, Peoria, IL 61651	309-672-2641
Clean Sweep Lead Abatement Ricky Walker	MBE Lead-Based Paint Removal 4014 Brighton Peoria, IL 61615	309-689-1146
Clevenger Contractors Inc. Verlee Clevenger	WBE Guardrail, Bridge Rail, Seeding, Fencing 355 Naples Rd., P.O. Box 19, Bluffs, IL 62621	217-754-3411 217-754-3537 Fax
CNS Forestry & Landscaping LLC Christine Schilling	WBE Landscaping, Seeding, Sodding, Tree Removal 1813 1000th St., Lincoln, IL 62656	217-792-3808 217-792-3808 Fax
Cordova Construction Tina Christopher	WBE Concrete Removal, Curb & Gutter Removal, Sidewalk Removal 2424 N. Ellory Road, Peoria, IL 61615	309-674-8810
Cornerstone Builders & Developers Ron Touilly	WBE 6129 W. Southport Rd., Peoria, IL 61615	309-674-9000 309-673-7783 Fax
CSS (Construction Specialties & Services) Dave Suzuki	MBE Building Specialties, Design, Engineering, Estimating P. O. Box 120703 Peoria, IL 61614	309-685-8453
Davis Brothers Construction Company Russell Davis	MBE Trucking/Hauling 1522 W. Kettelle St. Peoria, IL 61605	309-683-6931
DECA Realty Eddie J. Washington	MBE Real Estate Broker, Appraiser 417 W. Main, Peoria, IL 61606	309-637-3322 309-682-3922 Fax
Design Air Inc. Courtney Eston	MBE Commercial Air Duct Cleaning 3806 W. Hearthwood Dr., Dunlap, IL 61525	309-693-8632 309-243-2102 Fax
Dunbar Transfer	WBE Trucking P.O. Box 315, Chillicothe, IL 61523-0315	309-303-5122
E & D Trucking and Hauling, Inc. Eddie Proctor	MBE Trucking/Hauling 1913 N. Idaho, Peoria, IL 61604	309-682-4336 309-251-6736 Cell
Earth Care Unlimited, Inc. Monica Thomley	WBE Seeding, Sodding, Landscaping 3108 Panther Grove Rd., Ashland, IL 62612	217-452-7320 217-452-7178 Fax
Economy Painting & Decorating Linda Coffman	MBE Painting 9315 W. Goetz, Hanna City, IL 61536	309-565-7300
Elegant Installations James Barrett	MBE Installation/sales custom drapery, blinds, shade, shutters 125 E. Elaine, Peoria, IL 61614	309-648-8118 309-93-0007 Fax
Fashion Floors, Inc. Yvonne Hand	WBE Floorcoverings 930 S. 2nd Street, Suite B, Pekin, IL 61554	309-353-8272 309-347-1109 Fax
Fire & Ice Heating and Air J.T. Toombs	MBE HVAC Maintenance, Installment 922 W. Smith St., Peoria, IL 61605	309-219-3708
Fuhrmann Engineering Inc. Kathy Shelter	WBE Civil Engineers / Land Surveyors 456 Fulton St., Suite 146	309-713-3498 Ext. 5
Flessner Electric	WBE Electrical 3600 S. Cameron Ln., Mapleton, IL 61547	309-697-2484
G&L Trucking & Construction WBE	309-686-9334 1113 W. Groveland Ave., Peoria, IL 61604	
Garza Heating & Cooling	MBE 1304 S. Western Ave., Peoria, IL 61605	309-645-6294
Ronald A. Givens & Associates Ronald A. Givens	MBE Insurance & Investments 2616 N. Lehman, Peoria, IL 61602	309-685-4588 309-676-3152 Fax
Gutters & More	WBE 157 Thunderbird Ln., East Peoria, IL 61611	309-694-4000 309-694-3356 Fax

Hancock Trucking, Inc. Nancy Hancock	WBE Trucking/Hauling 30570 Hancock Road Mackinaw, IL 61755	309-447-6733
Hanley Steel, Inc. Jill Hanley	WBE Fabricated Structural and Miscellaneous Steel 8811 N. Industrial Rd., Peoria, IL 61615	309-692-5250 309-692-5251 Fax
Heart Technologies Jim Bainter, Brad Armstrong	WBE Data and Telephone, Communication and Construction 3105 N. Main Street, Peoria, IL 61611	309-427-7000 309-427-7007 Fax
Hermann & Associates Alisha Hermann	WBE Consultant Engineering 5835 N. Galena Rd., Peoria, IL 61614	309-687-5566 309-687-0571 Fax
Hoops Painting Monty Hoops	MBE Painting 136 Middle Park Dr., Canton, IL 61520	309-224-0736
Horan Construction, Inc. Susan Arnholt	WBE Carpentry, Concrete, Demolition, General, Wrecking 1720 W. Chanute Road Peoria, IL 61615	309-691-3133 309-691-1841 Fax
Infrastructure Engineering Thu Truitt	MBE Civil Enineering 456 Fulton St., Suite 104, Peoria, IL 61602	309-637-9200 309-637-9210
Intech Innovations John McCrary	WBE Audio/Video Design and Integration Washington, IL 61571	309-370-6676 309-745-9691 Fax
J Construction Frank Coates	MBE General 1810 Stever, Peoria, IL 61605	309-303-3919 Cell
JAKS Construction Inc. John Spencer	Disabled Vet Concrete Cutting,Drilling, Sealing 19319 Great Crane Rd., Bloomington, IL 61705	800-455-9662 309-455-9662 Fax
J. D. Masonry Services Hurdestine Dabbs	M/WBE Concrete 907 E. Arcadia, Peoria, IL 61603	309-453-6533 Cell
J&J Manufacturing	110 W. Walnut, Chillicothe, IL 61523	209-274-3141
J & J Construction Herman Johnson	MBE Demolition, Excavation 1710 W. Garden Street, Peoria, IL 61605	309-673-8616 309-676-8292 Fax
J & K Construction James Tilman	MBE General 4003 N. Rochelle, Peoria, IL 61615	309-685-8554 309-685-8554 Fax
JM Industrial Supply Ron Given	MBE Maintenance Items, Tools, Soaps 2323 Lakeshore, Pekin, IL 61554	309-346-5796 309-347-5100 Fax
Joseph & Associates Construction Inc. Elva Jones	M/WBE Rough and Finish Carpentry 325 Sanford St., East Peoria, IL 61611	309-550-5639 309-282-6013Fax
Kahbeah Contracting & Trucking Larry Kahbeah	MBE Trucking/Hauling 510 N. Yates, P. O. Box 56, Tallula, IL 62688	217-634-4157 217-634-4157 Fax
Kreiling Roofing Co.	WBE Slate, Wood Shakes, Tile, Thatch, Custom Fabricated Copper and Steel, Residential and Commercial 2335 W. Altorfer Dr., Peoria, IL 61615	309-673-3649
LNR Construction & Trucking Demonte Davis	MBE Concrete, Trucking 2200 Linsley St., Peoria, IL 61604	309-682-6331
LV Enterprise John L. Palmer	MBE Trucking/Hauling 303 E. Archer Avenue, Peoria, IL 61603	309-657-2420 309-682-8872 Fax
M & A Plumbing Michael Abner	MBE Plumbing 6216 N. Devonshire Avenue, Peoria, IL 61615	309-689-0133 309-689-0133 Fax
McGinnis Transportation Beth McGinnis	WBE Trucking, Tandem, 24 » Box Truck 336 Riverview Dr., Creve Cœur, IL 61610	309-369-4465 309-694-1604 Fax
M&K Heating & Cooling Reggie Williams	MBE HVAC 2406 W. Newman Parkway, Peoria, IL 61604	309-256-6129

M & L Plumbing Manzell Lawson	MBE Plumbing 1309 W. Lincoln, Peoria, IL 61605	309-674-8466
Mid-Illinois Companies, Corp.	WBE Metal Framing, Insulation, Drywall, Plaster and Exterior Insulation, Acoustical Ceilings and Wall Panels, Painting and Wall Covering, Access Flooring 905 NE Adams St., Peoria, IL 61603	309-674-0717 309-674-5802 Fas
Midwest Construction Services Sheila Shover	M/WBE Traffic Control Products, Trucking/Hauling P. O. Box 4185, Bartonville, IL 61607	309-697-1000 309-697-1004 Fax
Millennia Professional Services of IL Paul Moreno	MBE Civil Engineering, Erosion Control, Landscaping, Sewer Construction, Surveying, Retaining Walls 850 N. Main St., Morton, IL 61550	309-321-8141 309-321-8142
Molleck Electric	WBE Electrical 14926 W. Winchester Dr., Brimfield, IL 61517	309-446-3483
Ordaz Construction Co. Inc. Elizabeth Ordaz Mercer	WBE Concrete 8010 N. Sommer St., Peoria, IL 61615	309-693-3338 309-693-5505 Fax
Pendleton Excavating Darold Pendleton	MBE Excavation, Sand & Gravel 1207 W. MacQueen Peoria, IL 61605	309-685-9133 309-685-9133 Fax
Porter, V. L. Vincent Porter	MBE Concrete, General 500 W. North, Suite 10, Springfield, IL 62704	217-744-8050
RNS Electric Inc. Regina Slonneger	WBE Electrical 28558 Irish Lane, Washington, IL 61571	309-444-5200 309-444-5201 Fax
RTM Concrete Construction Morris Stokes	MBE Concrete 2207 W. Wiswall, Peoria, IL 61605	309-637-4237
N. E. Rudd Trucking Nanette Jenkins-Rudd	WBE Trucking/Hauling P.O. Box 14, 107 Washington St., Kingston Mines, IL 61539	309-389-4150 309-389-2849 Fax
Nelton Construction Damon Nelton	MBE Concrete, Residential and Commercial Construction 1180 Upper Spring Bay Rd., East Peoria, IL 61611	309-694-9837 309-694-9852 Fax
Professional Contracting Services Inc. Don Mackey	MBE Concrete, Masonry, Carpentry, Site Work 2669 N. County Hwy. 19, Canton, IL 61520	309-647-9744 309-208-7089 Cell
Ridge Painting Vickie Ridge	MBE Painting 4216 N. Patricia Ct., Peoria, IL 61615	309-688-5610
Rufus Construction Company Rufus Nelson	MBE Painting, Roofing, Remodeling 1819 S. Idaho Street, Peoria, IL 61605	309-673-6776 309-497-9453 Cell
Searle Trucking, Inc. Debbie Searle	WBE Trucking/Hauling P. O. Box 1084, Peoria, IL 61653	309-686-0708 309-688-5365 Fax
Sherwin Baker & Associates, Inc. Sherwin Baker	MBE Construction Management, Consulting, Engineering, Technical Services 103 E. Archer, Peoria, IL 61603	309-688-4203 309-688-4203 Fax
Smeltz, V.	MBE Excavation P. O. Box 64, Washington, IL 61571	
Tabitha Ventures, Inc. Edward O. Taiwo	MBE Asphalt, Concrete, Demolition, Earthwork, Electrical, Excavation, General, HVAC, Landscaping, Painting, Plumbing, Resurfacing, Roofing, Trucking/Hauling 2000 W. Pioneer Parkway, Suite 7B, Peoria, IL 61615	309-692-1473 309-692-1564 Fax
The Communication Connection Jennifer Stone	WBE Communication, Wire and Cable, Electrical and Telephone Products 604 Filmore Street Harrisburg, PA 17104	717-561-7267
Three Cross Development J. T. Donelson	MBE Concrete, General, Sidewalk 1519 W. Millman Peoria, IL 61605	309-637-1238

Third Hand Landscaping Tommy Harris	MBE Landscaping 2313 W. Lincoln, Peoria, IL 61605	309-673-6702
Thompson Brothers Inc. Todd Thompson	MBE General Carpentry and Construction, Interior Finish Work, Millwork 221 Court St., Pekin, IL 61554	309-613-0254
Thornton Rave dba Illini Concrete Co. of Illinois	MBE Precast and Prestressed Concrete, Demolition, Excavating and Grading, Drainage, Aggregate Bases and Surfaces, Pavement Patching 929 E. Grove St., Suite A, Bloomington, IL 61701	309-585-2376 309-585-2472 Fax
Tilman Electric James Tilman	MBE Electrical 4003 N. Rochelle, Peoria, IL 61615	309-685-8554 309-264-3903 Cell
TOS Trucking John McCullum	MBE Trucking 11501 Farmington Rd., Hanna City, IL 61536	309-208-1927
Wards Custom Landscaping Wardine Smith	MBE Landscaping 3804 W. Pagewood Dr., Peoria, IL 61615	309-671-1890 309-671-1893 Fax
Whitaker Construction Lionel Whitaker	MBE Concrete, General, Curb & Gutter, Sidewalk 4010 N. Marbleway Dr., Peoria, IL 61615	309-682-9305 309-208-0476 Cell
Wiegand & Storrer Inc. Leslie Savant	WBE Horizontal Boring, Sewer, Watermain 3210 E. Washington Road, East Peoria, IL 61611	309-699-6457 309-699-9660 Fax
Willie Veneble Construction Willie Venable	MBE Construction, Concrete Removal, Demolition 1000 E. Wilcox, Peoria, IL 61605	309-686-1429 309-360-0757 Cell
Willis Electric Phyllis Willis	WBE Electrical P.O. Box 545, Chillicothe, IL 61523	309-579-2926

Peoria County Prevailing Wage for April 2014

(See explanation of column headings at bottom of wages)

Trade Name	RG	TYP	C	Base	FRMAN	M-F>8	OSA	OSH	H/W	Pensn	Vac	Trng
ASBESTOS ABT-GEN		BLD		26.470	27.970	1.5	1.5	2.0	7.700	13.75	0.000	0.800
ASBESTOS ABT-GEN		HWY		29.350	30.850	1.5	1.5	2.0	7.700	14.86	0.000	0.800
ASBESTOS ABT-MEC		BLD		32.140	34.640	1.5	1.5	2.0	11.17	10.76	0.000	0.720
BOILERMAKER		BLD		36.000	39.000	2.0	2.0	2.0	7.070	14.69	0.000	0.350
BRICK MASON		BLD		32.060	33.560	1.5	1.5	2.0	8.300	9.500	0.000	0.580
CARPENTER		BLD		29.330	31.580	1.5	1.5	2.0	7.700	14.66	0.000	0.520
CARPENTER		HWY		30.820	33.070	1.5	1.5	2.0	7.700	15.14	0.000	0.520
CEMENT MASON		BLD		27.090	28.840	1.5	1.5	2.0	8.140	14.76	0.000	0.500
CEMENT MASON		HWY		28.280	29.780	1.5	1.5	2.0	8.140	15.13	0.000	0.500
CERAMIC TILE FNSHER		BLD		29.750	0.000	1.5	1.5	2.0	8.300	9.500	0.000	0.580
ELECTRIC PWR EQMT OP		ALL		38.300	45.290	1.5	1.5	2.0	6.150	10.73	0.000	0.380
ELECTRIC PWR GRNDMAN		ALL		26.280	45.290	1.5	1.5	2.0	5.790	7.360	0.000	0.260
ELECTRIC PWR LINEMAN		ALL		42.540	45.290	1.5	1.5	2.0	6.280	11.92	0.000	0.430
ELECTRIC PWR TRK DRV		ALL		27.560	45.290	1.5	1.5	2.0	5.830	7.720	0.000	0.280
ELECTRICIAN		BLD		34.820	37.320	1.5	1.5	2.0	5.600	11.07	0.000	0.400
ELECTRONIC SYS TECH		BLD		27.480	29.480	1.5	1.5	2.0	5.750	10.52	0.000	0.400
ELEVATOR CONSTRUCTOR		BLD		41.070	46.200	2.0	2.0	2.0	12.73	13.46	3.290	0.600
GLAZIER		BLD		31.670	33.670	1.5	1.5	2.0	9.950	7.700	0.000	1.250
HT/FROST INSULATOR		BLD		42.850	45.350	1.5	1.5	2.0	11.17	11.96	0.000	0.720
IRON WORKER		BLD		31.010	32.910	1.5	1.5	2.0	9.390	12.26	0.000	0.540
IRON WORKER		HWY		34.580	36.580	1.5	1.5	2.0	9.390	12.26	0.000	0.390
LABORER		BLD		25.470	26.970	1.5	1.5	2.0	7.700	13.75	0.000	0.800
LABORER		HWY		28.600	30.100	1.5	1.5	2.0	7.700	14.86	0.000	0.800
LABORER, SKILLED		BLD		25.870	27.370	1.5	1.5	2.0	7.700	13.75	0.000	0.800
LABORER, SKILLED		HWY		28.900	30.400	1.5	1.5	2.0	7.700	14.86	0.000	0.800
LATHER		BLD		29.330	31.580	1.5	1.5	2.0	7.700	14.66	0.000	0.520
MACHINERY MOVER		HWY		34.580	36.580	1.5	1.5	2.0	9.390	12.26	0.000	0.390
MACHINIST		BLD		43.920	46.420	1.5	1.5	2.0	6.760	8.950	1.850	0.000
MARBLE FINISHERS		BLD		29.750	0.000	1.5	1.5	2.0	8.300	9.500	0.000	0.580
MARBLE MASON		BLD		31.510	32.760	1.5	1.5	2.0	8.300	9.500	0.000	0.580
MILLWRIGHT		BLD		30.240	32.490	1.5	1.5	2.0	7.700	14.09	0.000	0.520
MILLWRIGHT		HWY		31.820	34.070	1.5	1.5	2.0	7.700	14.64	0.000	0.520
OPERATING ENGINEER		BLD	1	36.000	39.000	1.5	1.5	2.0	6.750	16.60	0.000	3.000
OPERATING ENGINEER		BLD	2	33.490	39.000	1.5	1.5	2.0	6.750	16.60	0.000	3.000

OPERATING ENGINEER	BLD	3	29.340	39.000	1.5	1.5	2.0	6.750	16.60	0.000	3.000
OPERATING ENGINEER	HWY	1	36.000	39.500	1.5	1.5	2.0	6.750	16.60	0.000	3.000
OPERATING ENGINEER	HWY	2	33.490	39.500	1.5	1.5	2.0	6.750	16.60	0.000	3.000
OPERATING ENGINEER	HWY	3	29.340	39.500	1.5	1.5	2.0	6.750	16.60	0.000	3.000
PAINTER	ALL		33.000	35.000	1.5	1.5	1.5	10.00	8.200	0.000	1.350
PAINTER SIGNS	BLD		33.920	38.090	1.5	1.5	1.5	2.600	2.710	0.000	0.000
PILEDRIVER	BLD		29.830	32.080	1.5	1.5	2.0	7.700	14.66	0.000	0.520
PILEDRIVER	HWY		31.820	34.070	1.5	1.5	2.0	7.700	15.14	0.000	0.520
PIPEFITTER	BLD		37.400	41.510	1.5	1.5	2.0	7.000	11.63	0.000	1.060
PLASTERER	BLD		27.770	29.770	1.5	1.5	2.0	8.140	13.71	0.000	0.650
PLUMBER	BLD		34.520	37.630	1.5	1.5	2.0	7.000	13.31	0.000	0.900
ROOFER	BLD		29.580	31.060	1.5	1.5	2.0	8.450	7.220	0.000	0.250
SHEETMETAL WORKER	BLD		32.150	33.760	1.5	1.5	2.0	8.270	14.18	0.000	0.780
SIGN HANGER	HWY		34.580	36.580	1.5	1.5	2.0	9.390	12.26	0.000	0.390
SPRINKLER FITTER	BLD		37.120	39.870	1.5	1.5	2.0	8.420	8.500	0.000	0.350
STEEL ERECTOR	HWY		34.580	36.580	1.5	1.5	2.0	9.390	12.26	0.000	0.390
STONE MASON	BLD		32.060	33.560	1.5	1.5	2.0	8.300	9.500	0.000	0.580
SURVEY WORKER	ALL		28.900	30.400	1.5	1.5	2.0	7.700	14.86	0.000	0.800
TERRAZZO FINISHER	BLD		29.750	0.000	1.5	1.5	2.0	8.300	9.500	0.000	0.580
TERRAZZO MASON	BLD		31.510	32.760	1.5	1.5	2.0	8.300	9.500	0.000	0.580
TILE MASON	BLD		31.510	32.760	1.5	1.5	2.0	8.300	9.500	0.000	0.580
TRUCK DRIVER	ALL	1	31.230	0.000	1.5	1.5	2.0	10.30	4.840	0.000	0.250
TRUCK DRIVER	ALL	2	31.680	0.000	1.5	1.5	2.0	10.30	4.840	0.000	0.250
TRUCK DRIVER	ALL	3	31.890	0.000	1.5	1.5	2.0	10.30	4.840	0.000	0.250
TRUCK DRIVER	ALL	4	32.180	0.000	1.5	1.5	2.0	10.30	4.840	0.000	0.250
TRUCK DRIVER	ALL	5	33.020	0.000	1.5	1.5	2.0	10.30	4.840	0.000	0.250
TRUCK DRIVER	O&C	1	24.980	0.000	1.5	1.5	2.0	10.30	4.840	0.000	0.250
TRUCK DRIVER	O&C	2	25.340	0.000	1.5	1.5	2.0	10.30	4.840	0.000	0.250
TRUCK DRIVER	O&C	3	25.510	0.000	1.5	1.5	2.0	10.30	4.840	0.000	0.250
TRUCK DRIVER	O&C	4	25.740	0.000	1.5	1.5	2.0	10.30	4.840	0.000	0.250
TRUCK DRIVER	O&C	5	26.420	0.000	1.5	1.5	2.0	10.30	4.840	0.000	0.250
TUCKPOINTER	BLD		32.060	33.560	1.5	1.5	2.0	8.300	9.500	0.000	0.580

Legend:
RG (Region)
TYP (Trade Type - All,Highway,Building,Floating,Oil & Chip,Rivers)
C (Class)
Base (Base Wage Rate)
FRMAN (Foreman Rate)
M-F>8 (OT required for any hour greater than 8 worked each day, Mon through Fri.
OSA (Overtime (OT) is required for every hour worked on Saturday)
OSH (Overtime is required for every hour worked on Sunday and Holidays)
H/W (Health & Welfare Insurance)
Pensn (Pension)
Vac (Vacation)
Trng (Training)

Explanations

PEORIA COUNTY

The following list is considered as those days for which holiday rates of wages for work performed apply: New Years Day, Memorial Day, Fourth of July, Labor Day, Thanksgiving Day, Christmas Day and Veterans Day in some classifications/counties. Generally, any of these holidays which fall on a Sunday is celebrated on the following Monday. This then makes work performed on that Monday payable at the appropriate overtime rate for holiday pay. Common practice in a given local may alter certain days of celebration. If in doubt, please check with IDOL.

Oil and chip resealing (O&C) means the application of road oils and liquid asphalt to coat an existing road surface, followed by application of aggregate chips or gravel to coated surface, and subsequent rolling of material to seal the surface.

EXPLANATION OF CLASSES

ASBESTOS - GENERAL - removal of asbestos material/mold and hazardous materials from any place in a building, including mechanical systems where those mechanical systems are to be removed. This includes the removal of asbestos materials/mold and hazardous materials from ductwork or pipes in a building when the building is to be demolished at the time or at some close future date.

ASBESTOS - MECHANICAL - removal of asbestos material from mechanical systems, such as pipes, ducts, and boilers, where the mechanical systems are to remain.

CERAMIC TILE FINISHER, MARBLE FINISHER, TERRAZZO FINISHER

Assisting, helping or supporting the tile, marble and terrazzo mechanic by performing their historic and traditional work assignments required to complete the proper installation of the work covered by said crafts. The term "Ceramic" is used for naming the classification only and is in no way a limitation of the product handled. Ceramic takes into consideration most hard tiles.

ELECTRONIC SYSTEMS TECHNICIAN

Installation, service and maintenance of low-voltage systems which utilizes the transmission and/or transference of voice, sound, vision, or digital for commercial, education, security and entertainment purposes for the following: TV monitoring and surveillance, background/foreground music, intercom and telephone interconnect, field programming, inventory control systems, microwave transmission, multi-media, multiplex, radio page, school, intercom and sound burglar alarms and low voltage master clock systems.

Excluded from this classification are energy management systems, life safety systems, supervisory controls and data acquisition systems not intrinsic with the above listed systems, fire alarm systems, nurse call systems and raceways exceeding fifteen feet in length.

LABORER, SKILLED - BUILDING

The skilled laborer building (BLD) classification shall encompass the following types of work, irrespective of the site of the work: cutting & acetylene torch, gunnite nozzlemen, gunnite pump men & pots, kettlemen & carriers of men handling hot stuff, sandblaster nozzle men, sandblasting pump men & pots, setting up and using concrete burning bars, wood block setters, underpinning & shoring of existing buildings, and the unload-ing and handling of all material coated with creosote.

LABORER, SKILLED - HIGHWAY

The skilled laborer heavy & highway (HWY) classification shall encompass the following types of work,irrespective of the site of the work: jackhammer & drill operator, gunite pump & pot man, puddlers, vibrator men, wire fabric placer, sandblast pump & pot man, strike off concrete, unloading, handling & carrying of all creosoted piles, ties or timber, concrete burning bars, power wheelbarrows or buggies, asphalt raker, brickset-ters, cutting torchman (electric & acetylene), men setting lines to level forms, form setters, gunite nozzle man & sandblasting nozzle man, power man, and rip-rapping by hand.

SURVEY WORKER - Operated survey equipment including data collectors, G.P.S. and robotic instruments, as well as conventional levels and transits.

TRUCK DRIVER - BUILDING, HEAVY AND HIGHWAY CONSTRUCTION
Class 1. Drivers on 2 axle trucks hauling less than 9 ton. Air compressor and welding machines and brooms, including those pulled by separate units, truck driver helpers, warehouse employees, mechanic helpers, greasers and tiremen, pickup trucks when hauling materials, tools, or workers to and from and on-the-job site, and fork lifts up to 6,000 lb. capacity.

Class 2. Two or three axle trucks hauling more than 9 ton but hauling less than 16 ton. A-frame winch trucks, hydrolift trucks, vactor trucks or similar equipment when used for transportation purposes. Fork lifts over 6,000 lb. capacity, winch trucks, four axle combination units, and ticket writers.

Class 3. Two, three or four axle trucks hauling 16 ton or more. Drivers on water pulls, articulated dump trucks, mechanics and working forepersons, and dispatchers. Five axle or more combination units.

Class 4. Low Boy and Oil Distributors.

Class 5. Drivers who require special protective clothing while employed on hazardous waste work.

TRUCK DRIVER - OIL AND CHIP RESEALING ONLY.

This shall encompass laborers, workers and mechanics who drive contractor or subcontractor owned, leased, or hired pickup, dump, service, or oil distributor trucks. The work includes transporting materials and equipment (including but not limited to, oils, aggregate supplies, parts, machinery and tools) to or from the job site; distributing oil or liquid asphalt and aggregate; stock piling material when in connection with the actual oil and chip contract. The Truck Driver (Oil & Chip Resealing) wage classification does not include supplier delivered materials.

OPERATING ENGINEERS - BUILDING

Class 1. Cranes; Overhead Cranes; Gradall; All Cherry Pickers; Mechanics; Central Concrete Mixing Plant Operator; Road Pavers (27E - Dual Drum - Tri Batchers); Blacktop Plant Operators and Plant Engineers; 3 Drum Hoist; Derricks; Hydro Cranes; Shovels; Skimmer Scoops; Koehring Scooper; Drag Lines; Backhoe; Derrick Boats; Pile Drivers and Skid Rigs; Clamshells; Locomotive Cranes; Dredge (all types) Motor Patrol; Power Blades - Dumore - Elevating and similar types; Tower Cranes (Crawler-Mobile) and Stationary; Crane-type Backfiller; Drott Yumbo and similar types considered as Cranes; Caisson Rigs; Dozer; Tournadozer; Work Boats; Ross Carrier; Helicopter; Tournapulls - all and similar types; Scoops (all sizes); Pushcats; Endloaders (all types); Asphalt Surfacing Machine; Slip Form Paver; Rock Crusher; Heavy Equipment Greaser; CMI, CMI Belt Placer, Auto Grade & 3 Track and similar types; Side Booms; Multiple Unit Earth Movers; Creter Crane; Trench Machine; Pump-crete-Belt Crete-Squeeze Cretes-Screw-type Pumps and Gypsum; Bulker & Pump - Operator will clean; Formless Finishing Machine; Flaherty Spreader or similar types; Screed Man on Laydown Machine; Wheel Tractors (industrial or Farm-type w/Dozer-Hoe-Endloader or other attachments); F.W.D. & Similar Types; Vermeer Concrete Saw.

Class 2. Dinkeys; Power Launches; PH One-pass Soil Cement Machine (and similar types); Pugmill with Pump; Backfillers; Euclid Loader; Forklifts; Jeeps w/Ditching Machine or other attachments; Tuneluger; Automatic Cement and Gravel Batching Plants; Mobile Drills (Soil Testing) and similar types; Gurries and Similar Types; (1) and (2) Drum Hoists (Buck Hoist and Similar Types); Chicago Boom; Boring Machine & Pipe Jacking Machine; Hydro Boom; Dewatering System; Straw Blower; Hydro Seeder; Assistant Heavy Equipment Greaser on Spread; Tractors (Track type) without Power Unit pulling Rollers; Rollers on Asphalt -- Brick Macadem; Concrete Breakers; Concrete Spreaders; Mule Pulling Rollers; Center Stripper; Cement Finishing Machines & CMI Texture & Reel Curing Machines; Cement Finishing Machine; Barber Green or similar loaders; Vibro Tamper (All similar types) Self-propelled; Winch or Boom Truck; Mechanical Bull Floats; Mixers over 3 Bag to 27E; Tractor pulling Power Blade or Elevating Grader; Porter Rex Rail; Clary Screed; Truck Type Hoptoe Oilers; Fireman; Spray Machine on Paving; Curb Machines; Truck Crane Oilers; Oil Distributor; Truck-Mounted Saws.

Class 3. Air Compressor; Power Subgrader; Straight Tractor; Trac Air without attachments; Herman Nelson Heater, Dravo, Warner, Silent Glo, and similar types; Roller: Five (5) Ton and under on Earth or Gravel; Form Grader; Crawler Crane & Skid Rig Oilers; Freight Elevators - permanently installed; Pump; Light Plant; Generator; Conveyor (1) or (2) - Operator will clean; Welding Machine; Mixer (3) Bag and Under (Standard Capacity with skip); Bulk Cement Plant; Oiler on Central Concrete Mixing Plant.

OPERATING ENGINEERS - HEAVY AND HIGHWAY CONSTRUCTION

CLASS 1. Cranes; Hydro Cranes; Shovels; Crane Type Backfiller; Tower, Mobile, Crawler, & Stationary Cranes; Derricks; Hoists (3 Drum); Draglines; Drott Yumbo & Similar Types considered as Cranes; 360 Degree Swing Excavator (Shears, Grapples, Movacs, etc.); Back Hoe; Derrick Boats; Pile Driver and Skid Rigs; Clam Shell; Locomotive - Cranes; Road Pavers - Single Drum - Dual Drum - Tri Batcher; Motor Patrols & Power Blades - Dumore - Elevating & Similar Types; Mechanics; Central Concrete Mixing Plant Operator; Asphalt Batch Plant Operators and Plant Engineers; Gradall; Caisson Rigs; Skimmer Scoop - Koering Scooper; Dredges (all types); Hoptoe; All Cherry Pickers; Work Boat; Ross Carrier; Helicopter; Dozer; Tournadozer; Tournapulls - all and similar types; Operation of Concrete and all Recycle Machines; Multiple Unit Earth Movers; Scoops (all sizes); Pushcats; Endloaders (all types); Asphalt Surfacing Machine; Slip Form Paver; Rock Crusher; Operation of Material Crusher, Screening Plants, and Tunnel Boring Machine; Heavy Equipment Greaser (top greaser on spread); CMI, Auto Grade, CMI Belt Placer & 3 Track and Similar Types; Side Booms; Asphalt Heater & Planer Combination (used to plane streets); Wheel Tractors (with Dozer, Hoe or Endloader Attachments); CAT Earthwork Compactors and Similar Types; Blaw Knox Spreader and Similar Types; Trench Machines; Pump Crete - Belt Crete - Squeeze Crete - Screw Type Pumps and Gypsum (operator will clean); Creter Crane; Operation of Concrete Pump Truck; Formless Finishing Machines; Flaherty Spreader or Similar Types; Screed Man on Laydown Machine; Vermeer Concrete Saw; Operation of Laser Screed; Span Saw; Dredge Leverman; Dredge Engineer; Lull or Similar Type; Hydro-Boom Truck; Operation of Guard Rail Machine; and Starting Engineer on Pipeline or Construction (11 or more pieces) including: Air Compressor (Trailer Mounted), All Forced Air Heaters (regardless of Size), Water Pumps (Greater than 4-1/2" or Total Discharge Over 4-1/2"), Light Plants, Generators (Trailer Mounted - Excluding Decontamination Trailer), Welding Machines (Any Size or Mode of Power), Conveyor, Mixer (any size), Stud Welder, Power Pac, etc, and Ground Heater (Trailer Mounted).

CLASS 2. Bulker & Pump; Power Launches; Boring Machine & Pipe Jacking Machine; Dinkeys; Operation of Carts, Powered Haul Unit for a Boring Machine; P & H One Pass Soil Cement Machines and Similar Types; Wheel Tractors (Industry or Farm Type - Other); Back Fillers; Euclid Loader; Fork Lifts; Jeep w/Ditching Machine or Other Attachments; Tunneluger; Automatic Cement & Gravel Batching Plants; Mobile Drills - Soil Testing and Similar Types; Pugmill with Pump; All (1) and (2) Drum Hoists; Dewatering System; Straw Blower; Hydro-Seeder; Bump Grinders (self-propelled); Assistant Heavy Equipment Greaser; Apsco Spreader; Tractors (Track-Type) without Power Units Pulling Rollers; Rollers on Asphalt - Brick or Macadam; Concrete Breakers; Concrete Spreaders; Cement Strippers; Cement Finishing Machines & CMI Texture & Reel Curing Machines; Vibro-Tampers (All Similar Types Self-Propelled); Mechanical Bull Floats; Self-Propelled Concrete Saws; Truck Mounted Power Saws; Operation of Curb Cutters; Mixers - Over Three (3) Bags; Winch and Boom Trucks; Tractor Pulling Power Blade or Elevating Grader; Porter Rex Rail; Clary Screed; Mule Pulling Rollers; Pugmill without Pump; Barber Greene or Similar Loaders; Track Type Tractor w/Power Unit attached (minimum); Fireman; Spray Machine on Paving; Curb Machines; Paved Ditch Machine; Power Broom; Self-Propelled Sweepers; Self-Propelled Conveyors; Power Subgrader; Oil Distributor; Straight Tractor; Truck Crane Oiler; Truck Type Oilers; Directional Boring Machine; Horizontal Directional Drill; Articulating End Dump Vehicles; Starting Engineer on Pipeline or Construction (6 -10 pieces) including: Air Compressor (Trailer Mounted), All Forced Air Heaters (regardless of Size), Water Pumps (Greater than 4-1/2" or Total Discharge Over 4-1/2"), Light Plants, Generators (Trailer Mounted - Excluding Decontamination Trailer), Welding Machines (Any Size or Mode of Power), Conveyor, Mixer (any size), Stud Welder, Power Pac, etc., and Ground Heater (Trailer Mounted).

CLASS 3. Straight Framed Truck Mounted Vac Unit (separately powered); Trac Air Machine (without attachments); Rollers - Five Ton and Under on Earth and Gravel; Form Graders; Bulk Cement Plant; Oilers; and Starting Engineer on Pipeline or Construction (3 - 5 pieces)

including: Air Compressor (Trailer Mounted), All Forced Air Heaters (regardless of Size), Water Pumps (Greater than 4-1/2" or Total Discharge Over 4-1/2"), Light Plants, Generators (Trailer Mounted - Excluding Decontamination Trailer), Welding Machines (Any Size or Mode of Power), Conveyor, Mixer (any size), Stud Welder, Power Pac, etc., and Ground Heater (Trailer Mounted).

Other Classifications of Work:

For definitions of classifications not otherwise set out, the Department generally has on file such definitions which are available. If a task to be performed is not subject to one of the classifications of pay set out, the Department will upon being contacted state which neighboring county has such a classification and provide such rate, such rate being deemed to exist by reference in this document. If no neighboring county rate applies to the task, the Department shall undertake a special determination, such special determination being then deemed to have existed under this determination. If a project requires these, or any classification not listed, please contact IDOL at 217-782-1710 for wage rates or clarifications.

LANDSCAPING

Landscaping work falls under the existing classifications for laborer, operating engineer and truck driver. The work performed by landscape plantsman and landscape laborer is covered by the existing classification of laborer. The work performed by landscape operators (regardless of equipment used or its size) is covered by the classifications of operating engineer. The work performed by landscape truck drivers (regardless of size of truck driven) is covered by the classifications of truck driver.

SAMPLE ADDENDUM

Peoria Park District
Planning, Design and Construction Department
1314 N. Park Road
Peoria, IL 61604
Telephone: (309) 686-3386

ADDENDUM NO.

PROJECT TITLE:

ISSUANCE DATE:

LOCATION:

The proposed Contract Documents for this Work are modified as follows:

I. **DRAWINGS**: (Delete/Change/Modify/Etc.)

II. **PROJECT MANUAL/SPECIFICATIONS/GENERAL CONDITIONS/ETC**.: (Delete/Change/Modify/Etc.)

III. **INVITATION TO BID**: (Delete/Change/Modify/Etc.)

END OF ADDENDUM NO. _____

(Addendum may be bound into Project Manual, attached to front cover, faxed, mailed or delivered to bidders.)

Addendum No. _____
Page 1 of 1

Pleasure Driveway and Park District of Peoria, Illinois

Sample Agreement Between Owner and Contractor

This **AGREEMENT** for

is made as of the _____ day of _____ in the year of Two Thousand Fourteen (2014)

Between the Owner:

PLEASURE DRIVEWAY AND PARK DISTRICT OF PEORIA, ILLINOIS
1125 W. LAKE AVENUE
PEORIA, IL 61614

And the Contractor:

The Owner's Representative is:

PLANNING, DESIGN AND CONSTRUCTION DEPARTMENT
1314 N. PARK ROAD
PEORIA, IL 61604

The Architect or Engineer is:

APACEDESIGN ARCHITECTECT AND ENGINEERS
2112 E. WAR MEMORIAL DR.
PEORIA, IL 61614-8002

The Owner and Contractor agree as follows:

I. THE CONTRACT DOCUMENTS. The Contract Documents consist of this AGREEMENT, the Plans/Drawings for the Project dated March 19, 2014, all sections of the Project Manual dated April 1, 2014, including but not limited to the Instructions and Supplementary Instructions to Bidders, the Bid Form, the General Conditions (1997 AIA Document A201) and Supplementary General Conditions, the General Requirements, the Specifications, and other documents as enumerated in Section 10 and Attachment #1 of this AGREEMENT**,** and including addenda issued prior to the execution of this AGREEMENT. The Contract Documents form the CONTRACT between the Owner and the Contractor. The CONTRACT represents the entire and integrated contract for the construction of the Work of the Project between the parties hereto and supersedes prior proposals, contracts, negotiations, or representations, either written or oral.

II. THE WORK OF THE CONTRACT. The Contractor shall execute the entire Work described in the Contract Documents, unless modified in Section XI of this AGREEMENT**.**

III. BASIS OF PAYMENT. The Work of the CONTRACT shall be performed on a lump sum basis.

IV. CONTRACT SUM. The Owner shall pay the Contractor the sum of

(and incorporates the acceptance of bid alternates as defined in sub-paragraph "A", below) for the Contractor's performance of the Work required by the Contract Documents, subject to modifications made by Owner approved Change Orders. If this CONTRACT calls for a unit price basis of payment, the contract sum stated above shall be adjusted by Change Order based upon multiplying the unit prices submitted by the Contractor on the Bid Form (and included herein as an Attachment to this CONTRACT) times (x) the actual quantities installed.

A. ACCEPTANCE OF ALTERNATES. The contract sum stated above is based on the acceptance of the following alternates, which are described in the Project Manual:

ITEM	ADD	DEDUCT

V. DATES OF COMMENCEMENT AND COMPLETION OF THE WORK. The Owner's Representative will issue a written Notice to Proceed with the Work of the Project after receiving the required Performance Bond, Labor and Material Payment Bond, and Certificate of Insurance (in proper form and providing the required coverages and amounts from a company [or companies] acceptable to the Owner, and naming the Owner as an Additional Insured), and any other pre-construction submittals required by the Contract Documents. The Contractor hereby acknowledges and agrees that failure to provide such submittals in a timely manner shall not be cause to adjust the date(s) for completion of the Work.

A. LIQUIDATED DAMAGES. Owner and Contractor recognize that time is of the essence of this CONTRACT and that Owner will suffer financial loss if the Contractor has not achieved Substantial Completion and Final Completion of the Work within the time specified below, plus any extensions thereof allowed in accordance with Article 8 of the General Conditions. They also recognize the delays, expense and difficulties involved in proving in a legal or arbitration proceeding the actual loss suffered by Owner if the Work is not completed on time.

B. SUBSTANTIAL COMPLETION. Accordingly, instead of requiring any such proof, Owner and Contractor agree that as Liquidated Damages for delay (but not as a penalty), Contractor shall pay Owner two hundred fifty dollars ($250.00) for each calendar day that expires after two hundred fifty nine (259) calendar days from Notice of Award until Substantial Completion is attained. The work is tentatively scheduled to begin on March 15, 2014 and be at Substantial Completion by January 28, 2015.

C. FINAL COMPLETION. After Substantial Completion if Contractor shall neglect, refuse, or fail to complete the remaining Work necessary to achieve Final Completion within thirty (30) calendar days or any proper extension thereof granted by Owner, Contractor shall pay Owner two hundred fifty dollars ($250.00) for each day that expires after the time specified.

VI. PROGRESS PAYMENTS, REDUCTION OF RETAINAGE AND FINAL PAYMENT.

A. Unless otherwise specified elsewhere in the Contract Documents, the Contractor may submit monthly applications for progress payments ("Application for Payment") to the Owner's Representative. Each Application for Payment must be certified by the Architect or Engineer (if applicable), or the Owner's Representative if an Architect or Engineer has not been engaged for construction phase services. An Application for Payment shall be for a period of no less than one calendar month ending on the last day of the month, unless otherwise approved in writing by the Owner's Representative. Application forms shall be subject to Owner's approval. Each Application for Payment shall be based upon the Schedule of Values submitted by the Contractor, in accordance with the Contract Documents. The Schedule of Values shall be approved by the Owner's Representative and the Architect or Engineer (if applicable) in advance of the Contractor's first Application for Payment and the approved schedule shall be used by the Contractor as the basis for submitting payment requests. The Owner's Representative and/or

Architect/Engineer's (if applicable) approval of the Schedule of Values shall not constitute a complete check for accuracy, and shall not relieve the Contractor from responsibility for errors of any sort.

B. An Application for Payment (certified by the Architect or Engineer, if applicable) shall be submitted to the Owner's Representative no later than the fifth (5th) day of the month following the period for which the application is being submitted. In such case, the Owner shall make the progress payment to the Contractor not later than the twentieth day of the next month. A progress payment request on an Application for Payment (certified by the Architect or Engineer, if applicable) received by the Owner's Representative after the fifth (5th) day of a month shall be made by the Owner not later than forty-five days after receipt by the Owner's Representative.

C. Based upon its review of the certified (by the Architect or Engineer, if applicable) Application for Payment, the Owner shall make a progress payment to the Contractor in such amount as the Owner reasonably determines is properly due, subject to a retainage of ten percent (10%) of the value of the Work completed and covered by the Application for Payment, less the aggregate of previous payments in each case. In determining the amount properly due, the Owner shall consider the value of labor, materials and equipment incorporated in the Work, or properly allocable to materials and equipment suitably stored at the site or at some other location previously agreed upon in writing by the parties. The Owner's Representative shall have the sole right to determine that materials or equipment stored off-site have been properly delivered, protected, and/or secured. The Owner's Representative (or the Architect or Engineer, if applicable) may nullify or withhold a Certificate of Payment, in whole or in part, for the reasons set forth in Section 9.5 of the General Conditions. Upon Substantial Completion of the Work, the Owner shall pay the Contractor a sum sufficient to increase the total payments to ninety-five percent (95%) of the Contract Sum, less such amounts as the Owner's Representative shall determine for incomplete work and unsettled claims.

VII. Final payment, constituting the entire unpaid balance of the Contract Sum, shall be made by the Owner when **1)** the Contract has been fully performed by the Contractor except for the Contractor's responsibility to correct nonconforming Work as provided in Subparagraph 12.2.2 of the General Conditions and to satisfy other requirements, if any, which necessarily survive final payment; and **2)** a final Certificate of Payment has been issued by the Architect/Engineer or Owner's Representative; such final payment shall be made by the Owner not more than forty-five (45) days after the receipt of the final Certificate of Payment by the Owner.

VIII. CHANGE ORDERS. The Owner and Contractor agree that changes in the Work are sometimes required and necessary, and that timely: **a)** submission of proposed changes in the Work or the scope of Work by the Owner, **b)** pricing by the Contractor, **c)** review by the Owner's Representative and/or Architect/Engineer, and **d)** final approval by the Owner are necessary in order to assure that the Work of the Project is completed on schedule. The Contractor hereby acknowledges and agrees that an increase in the scope of the Work does not grant or imply an increase in the Contract Time, unless specifically so stated on the final approved Change Order. The Contractor also agrees that any and all Work which deviates from the plans and specifications and/or results in additional Work performed by Contractor's forces, including those of his sub-contractor's, will not result in additional expense to the Owner, unless **finally approved both by the Owner and the Architect/Engineer (if applicable) prior to the additional Work being performed.** No claim for an addition to the Contract Sum shall be valid unless approved by a written Change Order signed by the Owner and the architect/engineer (if applicable) **prior to the additional Work being performed.**

IX. TERMINATION OR SUSPENSION. The CONTRACT may be terminated by the Owner or the Contractor as provided by Article 14 of the General Conditions. The Work may be suspended by the Owner as provided in Article 14 of the General Conditions.

X. ENUMERATION OF CONTRACT DOCUMENTS. The Contract Documents, except for modifications issued after the execution of this Agreement, consist of:

A. this Standard Form of Agreement Between Owner and Contractor, of the Pleasure Driveway and Park District of Peoria, Illinois.

B. the Plans or Drawings titled Peoria Playhouse Children's Museum, dated March 19, 2014, and enumerated in ATTACHMENT #1 - "LIST OF DRAWINGS".

C. Supplementary and other Conditions of the CONTRACT, and the Specifications, are those found in the Project Manual titled "Peoria Playhouse Children's Museum ", and dated April 1, 2014 enumerated as follows:

1) Supplementary Instructions to Bidders
2) Contractor's Proposal, as accepted by the Owner
3) General Conditions of the Contract for Construction, AIA Document A201, 1997 Edition
4) Supplementary General Conditions
5) Major Subcontractor List
6) Directory of Minority & Women Owned Business Enterprises
7) Illinois Drug Free Workplace Certification
8) Contractor Certification (Individual or Corporate/Partnership)
9) Peoria Park District Certificate of Equal Employment Opportunity Compliance for Contractors and Vendors
10) Workforce Profile
11) Performance Bond
12) Labor and Material Payment Bond
13) Proof of Insurance
14) Specifications: Division 010000, "General Requirements"; Divisions 020000-350000 as applicable
15) Attachment A6- Insurance Requirements
16) Certificate of Safety Compliance
17) Peoria Park District Weekly Workforce Report
18) Certified Payroll Form
19) Substance Abuse Prevention Program Certification

XI. MISCELLANEOUS PROVISIONS. Other Provisions of this Agreement are as follows:

This AGREEMENT is entered into as of the day and year first written above and is executed in at least three original copies of which one is to be delivered to the Contractor, one to the Architect/Engineer (if any) for use in the administration of the CONTRACT, and one to the Owner.

OWNER:

_____
(Signature)

TIMOTHY J. CASSIDY, Park Board President

ATTEST:

CONTRACTOR :

_____
(Signature)

_____
(Printed Name and Title)

ATTEST:

ATTACHMENT #1 - LIST OF DRAWINGS

Number	Title	Date
TITLE SHEET		
S001	STRUCTURAL GENERAL NOTES	3/19/14
S101	FOUNDATION PLAN	3/19/14
S201	LEVEL 2 FRAMING PLAN	3/19/14
S202	LEVEL 3 FRAMING PLAN	3/19/14
S203	UPPER CEILING FRAMING PLAN	3/19/14
S301	FOUNDATION DETAILS	3/19/14
S401	FRAMING DETAILS	3/19/14
S402	FRAMING DETAILS	3/19/14
A000	SCHEDULES AND DETAILS	3/19/14
A001	WALL TYPES, SCHEDULES, AND DETAILS	3/19/14
A100	EXISTING/DEMOLITION LEVEL 1 FLOOR PLAN	3/19/14
A101	EXISTING/DEMOLITION LEVEL 2 FLOOR PLAN	3/19/14
A102	EXISTING/DEMOLITION LEVEL 3 FLOOR PLAN	3/19/14
A103	REVISED LEVEL 1 FLOOR PLAN	3/19/14
A104	REVISED LEVEL 2 FLOOR PLAN	3/19/14
A105	REVISED LEVEL 3 FLOOR PLAN	3/19/14
A106	PARTIAL PLANS	3/19/14
A107	INSULATION LOCATION PLANS	3/19/14
A200	ELEVATIONS	3/19/14
A201	ELEVATIONS	3/19/14
A300	BUILDING SECTIONS	3/19/14
A301	BUILDING SECTIONS	3/19/14
A302	EXISTING/REVISED PARTIAL SECTIONS	3/19/14
A303	EXISTING/REVISED PARTIAL SECTIONS	3/19/14
A304	EXISTING/REVISED PARTIAL SECTIONS/ELEVATIONS	3/19/14
A305	RAMP SECTIONS AND ELEVATIONS (ALT. BID NO. 4)	3/19/14
A400	LEVEL 1 REFLECTED CEILING PLAN	3/19/14
A401	LEVEL 2 REFLECTED CEILING PLAN	3/19/14
A402	LEVEL 3 REFLECTED CEILING PLAN	3/19/14
A500	DETAILS	3/19/14
A600	INTERIOR CASEWORK AND ELEVATIONS	3/19/14
A601	RESTROOM ELEVATIONS AND DETAILS	3/19/14
IF100	REVISED LEVEL 1 INTERIOR FINISHES PLAN	3/19/14
IF101	REVISED LEVEL 2 INTERIOR FINISHES PLAN	3/19/14
IF102	REVISED LEVEL 3 INTERIOR FINISHES PLAN	3/19/14
FP100	FIRE SPRINKLER LEVEL 1	3/19/14
FP101	FIRE SPRINKLER LEVEL 2	3/19/14
FP102	FIRE SPRINKLER LEVEL 3 AND ATTIC PLAN	3/19/14
FP102	FIRE SPRINGKLER BUILDING SECTION	3/19/14
FP201	FIRE SPRINKLER BUILDING SECTION	3/19/14
P000	REVISED UNDER FLOOR LEVEL 1 PLUMBING PLAN	3/19/14
P100	REVISED ABOVE FLOOR LEVEL 1 PLUMBING PLAN	3/19/14
P101	REVISED ABOVE FLOOR LEVEL 2 PLUMBING PLAN	3/19/14
P102	REVISED ABOVE FLOOR LEVEL 3 PLUMBING PLAN	3/19/14

P200	PARTIAL SITE PLAN AND DETAILS	3/19/14
P300	EXISTING/DEMOLITION LEVEL 1 PLUMBING PLAN	3/19/14
P301	EXISTING/DEMOLITION LEVEL 2 PLUMBING PLAN	3/19/14
P302	EXISTING/DEMOLITION LEVEL 3 PLUMBING PLAN	3/19/14
H100	REVISED LEVEL 1 HVAC PLANS	3/19/14
H101	REVISED LEVEL 2 HVAC PLANS	3/19/14
H102	REVISED LEVEL 3 HVAC PLANS	3/19/14
H200	HVAC SCHEDULES AND DETAILS	3/19/14
H201	HVAC SECTIONS	3/19/14
H202	HVAC SECTIONS	3/19/14
H300	EXISTING/DEMOLITION LEVEL 1 HVAC PLAN	3/19/14
H301	EXISTING/DEMOLITION LEVEL 2 HVAC PLAN	3/19/14
H302	EXISTING/DEMOLITION LEVEL 3 HVAC PLAN	3/19/14
E101	LEVEL 1 ELECTRICAL DEMOLITION	3/19/14
E102	LEVEL 2 ELECTRICAL DEMOLITION	3/19/14
E103	LEVEL 3 ELECTRICAL DEMOLITION	3/19/14
E111	LEVEL 1 ELECTRICAL PLAN – LIGHTING	3/19/14
E112	LEVEL 2 ELECTRICAL PLAN – LIGHTING	3/19/14
E113	LEVEL 3 ELECTRICAL PLAN – LIGHTING	3/19/14
E121	LEVEL 1 ELECTRICAL PLAN – POWER	3/19/14
E122	LEVEL 2 ELECTRICAL PLAN – POWER	3/19/14
E123	LEVEL 3 ELECTRICAL PLAN – POWER	3/19/14
E131	LEVEL 1 ELECTRICAL PLAN – SYSTEMS	3/19/14
E132	LEVEL 2 ELECTRICAL PLAN – SYSTEMS	3/19/14
E133	LEVEL 3 ELECTRICAL PLAN – SYSTEMS	3/19/14
E200	ONE-LINE & RISER	3/19/14
E201	PANEL SCHEDULES	3/19/14
E300	FIRE ALARM SCHEDULES, RISER AND DETAILS	3/19/14
E301	TELE DATA SPECIFICATIONS AND DETAILS	3/19/14
E302	TELE DATA SCHEDULE AND RISER DIAGRAM	3/19/14
E400	ELECTRICAL DETAILS	3/19/14
E500	LIGHTING FIXTURE SCHEDULE & NOTES	3/19/14
E501	MATERIAL SCHEDULE & NOTES	3/19/14
LL101	LIGHTING LAYOUT – LEVEL 1	3/19/14
LL102	LIGHTING LAYOUT – LEVEL 2	3/19/14
LL103	LIGHTING LAYOUT – LEVEL 3	3/19/14

PERFORMANCE BOND

TO: PLEASURE DRIVEWAY AND PARK DISTRICT OF PEORIA
PEORIA, ILLINOIS

KNOW ALL MEN BY THEIR PRESENTS;

That_____
_____
as Principal, and_____
_____as
corporation of the State of _____, as Surety, are held and firmly bound unto the PLEASURE DRIVEWAY AND PARK DISTRICT OF PEORIA, PEORIA, ILLINOIS, as Obligee, in the amount of _____
_____
($_____), for the payment whereof Principal and Surety bind themselves, their heirs, executors, administrators, successors and assigns, jointly and severally, firmly by these presents.

WHEREAS, Principal has by written agreement dated _____, 20 _____ entered into a contract with Obligee for _____
_____
in accordance with contract documents prepared by the Architect-Engineer, which Contract is by reference made a part hereof and is hereinafter referred to as "the Contract".

NOW, THEREFORE, THE CONDITION OF THIS OBLIGATION is such that if Principal shall promptly and faithfully perform the Contract and all changes thereof, and during the life of any guaranty or warranty required under the Contract, and, if Principal shall fully secure and protect the Obligee from all liability and from all loss or expense of any kind, including all court costs, engineering fees and attorneys' fees made necessary or arising from the failure, refusal or neglect of Principal to comply with all obligations assumed by Principal in connection with the performance of the Contract and all changes thereof, then this obligation shall be null and void; otherwise it shall remain in full force and effect.

Surety hereby waives notice of any changes in the Contract, including extensions of time for the performance thereof. Whenever Principal shall be and is declared to be in default under the Contract, Obligee having performed Obligee's obligations thereunder, Surety shall, after notice of such default, reserve all rights against all parties, take over and complete the Contract and become entitled to payment of the balance of any monies due or to become due to such defined Principal in accordance with the progress of the work.

A condition of this Bond is that the Principal shall faithfully perform in accordance with the prevailing wage clause provided in the bid specification or Contract pursuant to Illinois Compiled Statutes 820 ILCS 130/1 *et. seq.*

No right of action shall accrue on this Bond to or for the use of any person or corporation other than the Obligee named herein.

Signed and Sealed this _____ day of _____, 20 _____.

CONTRACTOR

_____
Contractor Firm Name

By: _____
Signature

_____
Title

ATTEST:

_____
Corporate Secretary (Corporations only)

SURETY

_____
Surety Name

By:_____
Attorney-in-Fact

_____
Resident Agent

LABOR & MATERIAL PAYMENT BOND

TO: PLEASURE DRIVEWAY AND PARK DISTRICT OF PEORIA
PEORIA, ILLINOIS

KNOW ALL MEN BY THESE PRESENTS:

That: _____
_____
as Principal, and _____
_____
a corporation of the State of _____ as Surety, are held and firmly bound unto the PLEASURE DRIVEWAY AND PARK DISTRICT OF PEORIA, PEORIA, ILLINOIS, as Obligee, for the use and benefit of claimants as hereinafter defined in the amount of _____Dollars ($_____), for the payment whereof Principal and Surety bind themselves, their heirs, executors, administrators, successors and assigns, jointly and severally, firmly by these presents.

WHEREAS, Principal has by written agreement dated _____, 20 _____, entered into a Contract with Obligee for _____
_____
in accordance with contract documents prepared by the Architect-Engineer which Contract is by reference made a part hereof, and is hereinafter referred to as "the Contract".

NOW, THEREFORE, THE CONDITION OF THIS OBLIGATION is such that if Principal shall promptly pay for all laborers, workers and mechanics engaged in the work under the Contract, and not less than the general prevailing rate of hourly wages of a similar character in the locality in which the work is performed, as determined by the State of Illinois Department of Labor pursuant to the Illinois Compiled Statutes 820 ILCS 130/1 et. seq. and for all material used or reasonably required for use in the performance of the Contract, then this obligation shall be void; otherwise it shall remain in full force and effect.

1. A claimant is defined as any person, firm, or corporation having contracts with the Principal or with any of Principal's subcontractors for labor or materials furnished in the performance of the Contract on account of which this Bond is given.

2. Nothing in this Bond contained shall be taken to make the Obligee liable to any subcontractor, materialman or laborer, or to any other person to any greater extent than it would have been liable prior to the enactment of The Public Construction Bond Act, approved June 20, 1931, as amended; provided further, that any person having a claim for labor and materials furnished in the performance of the Contract shall have no right of action unless he shall have filed a verified notice of such claim with the Obligee within 180 days after the date of the last item of work or the furnishing of the last item of materials, which claim shall have been verified and shall contain the name and address of the claimant, the business address of the claimant within the State of Illinois, if any, or if the claimant be a foreign corporation having no place of business within the State the principal place of business of the corporation, and in all cases of partnership the names and residences of each of the partners, the name of the Contractor for the Obligee, the name of the person, firm or corporation by whom the claimant was employed or to whom such claimant furnished materials, the amount of the claim and a brief description of the public improvement for the construction or installation of which the Contract is to be performed. No defect in the notice herein provided for shall deprive the claimant of its right of action under the terms and provisions of this Bond unless it shall affirmatively appear that such defect has prejudiced the rights of an interested party asserting the same.

3. No action shall be brought on this Bond until the expiration of 120 days after the date of the last item of work or of the furnishing of the last item of material except in cases where the final settlement between the Obligee and the Contractor shall have been made prior to the expiration of the 120 day period, in which case action may be taken immediately following such final settlement; nor shall any action of any kind be brought later than 6 months after the acceptance by the Obligee of the work. Such suit shall be brought only in the circuit court of this State in the judicial district in which the Contract is to be performed.

4. Surety hereby waives notice of any changes in the Contract, including extensions of time for the performance thereof.

5. The amount of this Bond shall be reduced by and to the extent of any payment or payments made in good faith hereunder.

6. The Principal and Surety shall be liable for any attorneys fees, engineering costs, or court costs incurred by the Obligee relative to claims made against this Bond.

Signed and Sealed this _____ day of _____, 20 _____.

CONTRACTOR

Contractor Firm Name:

_____

By: _____
Signature

_____
Title

ATTEST:

_____
Corporate Secretary (Corporations only)

SURETY

_____

By:_____
Attorney-in-Fact

_____
Resident Agent

CONTRACTOR'S AFFIDAVIT

STATE OF ILLINOIS)
) SS
COUNTY OF PEORIA)

TO WHOM IT MAY CONCERN:

THE undersigned, being duly sworn, deposes and says that he is _____
_____ of the _____
who is the contractor for the _____
building located at _____
owned by _____.

That the total amount of the contract including extras is $_____ on which he has received payment of $_____ prior to this payment. That all waivers are true, correct and genuine and delivered unconditionally and that there is no claim either legal or equitable to defeat the validity of said waivers. That the following are the names of all parties who have furnished material or labor, or both, for said work and all parties having contracts or sub-contracts for specific portions of said work or for material entering into the construction thereof and the amount due or to become due to each, and that the items mentioned include all labor and material required to complete said work according to plans and specifications:

NAMES	WHAT FOR	CONTRACT PRICE	AMOUNT PAID	THIS PMT.	BALANCE DUE

TOTAL ALL LABOR AND MATERIAL TO COMPLETE

There are no other contracts for said work outstanding, and that there is nothing due or to become due to any person for material, labor or other work of any kind done or to be done upon or in connection with said work other than above stated.

Signed this _____ day of _____, 20 _____.

Signature: _____

Subscribed and sworn to before me this _____ day of _____, 20 ___.

_____
Notary Public

FINAL WAIVER OF LIEN

STATE OF ILLINOIS)
) SS
COUNTY OF PEORIA)

TO WHOM IT MAY CONCERN:

WHEREAS, the undersigned _____ha_____ been employed by THE PEORIA PARK DISTRICT to furnish material and labor for the _____

at the premises commonly known as _____

located in the City of _____, County of Peoria, State of Illinois.

The undersigned, for and in consideration of _____ ($_____) Dollars, and other good and valuable considerations, the receipt whereof is hereby acknowledged, do_____ hereby waive and release any and all lien or claim or right of lien under the statutes of the State of Illinois relating to mechanics' liens, with respect to and on said above-described premises and improvements thereon and on the money, funds or other considerations due or become due from the owner on account of labor or services, material, fixtures, apparatus or machinery heretofore furnished or which may be furnished at any time hereafter by the undersigned for the above described premises.

Dated this _____ day of _____ 20 _____.

[Affix corporate seal here.]

_____
(Name of sole owner, corporation or partnership)

ATTEST:

_____
(Signature of secretary of corporation)

_____(SEAL)
(Signature of sole owner or authorized representative of corporation or partnership)

WAIVER OF LIEN

GENERAL CONTRACTOR'S PARTIAL
TO COVER ONLY CERTAIN PAYMENTS

STATE OF ILLINOIS)
) SS
COUNTY OF PEORIA)

TO ALL WHOM IT MAY CONCERN:

WHEREAS, the undersigned _____ has been employed by THE PEORIA PARK DISTRICT to furnish material and labor for the _____at the premises commonly known as _____

_____

located in the City of Peoria, County of Peoria, and State of Illinois.

NOW, THEREFORE, the undersigned, for and in consideration of the sum of _____ _____ Dollars, and other good and valuable considerations, the receipt whereof is hereby acknowledged by the undersigned, does hereby waive and release to the extent only of the aforesaid amount of _____ Dollars, paid simultaneously herewith, any and all lien or right or claim of lien under the statutes of the State of Illinois relating to mechanics' liens, with respect to and on said above-described premises, and the improvements thereon and on the money, funds, or other consideration due or to become due from the owner on account of labor, services, material, fixtures, apparatus or machinery, furnished by the undersigned, to or on account of the said owner, for the above-described premises, but only to the extent of the payment aforesaid.

Dated this _____ day of _____, 20 _____.

[Affix corporate seal here]

_____
(Name of sole owner, corporation or partnership)

ATTEST:

_____
(Signature of secretary of corporation)

_____(SEAL)
(Signature of sole owner or authorized representative of corporation or partnership)

SUB-CONTRACTOR'S FINAL WAIVER OF LIEN

STATE OF ILLINOIS)
) SS
COUNTY OF PEORIA)

TO WHOM IT MAY CONCERN:

WHEREAS, the undersigned _____
(sub-contractor)
ha____ been employed by _____
(general contractor)
to furnish material and labor for the _____ at the

premises commonly known as _____, in the City of _____,

County of Peoria, State of Illinois.

The undersigned, for and in consideration of _____

_____ ($_____) Dollars, and other good and valuable considerations, the receipt whereof is hereby acknowledged, do _____ hereby waive and release any and all lien or claim or right of lien under the statutes of the State of Illinois relating to Mechanics Liens, on the above described premises and improvements thereon and on the money, funds or other considerations due or become due from the owner on account of labor or services, material, fixtures, apparatus or machinery heretofore furnished or which may be furnished at any time hereafter by the undersigned for the above described premises.

Dated this _____ day of _____, 20 _____.

[Affix corporate seal here.]

ATTEST:_____

_____
(Name of sole owner, corporation or partnership)

_____ _____(SEAL)
(Signature of sole owner or authorized representative of corporation of partnership) (Signature of secretary of corporation)

WAIVER OF LIEN

SUB-CONTRACTOR'S PARTIAL
TO COVER ONLY CERTAIN PAYMENTS

STATE OF ILLINOIS)
) SS
COUNTY OF PEORIA)

TO WHOM IT MAY CONCERN:

THE undersigned, _____
(sub-contractor)
has been employed by _____
(general contractor)
to furnish material and labor for the _____

_____

at the premises commonly known as _____

_____
located in the City of Peoria, County of Peoria, and State of Illinois.

NOW, THEREFORE, the undersigned, for and in consideration of the sum of _____ _____ Dollars, and other good and valuable considerations, the receipt whereof is hereby acknowledged by the undersigned, does hereby waive and release to the extent only of the aforesaid amount of _____ Dollars, paid simultaneously herewith, any and all lien or right or claim of lien under the statutes of the State of Illinois relating to mechanics' liens, with respect to and on said above-described premises, and the improvements thereon and on the money, funds, or other consideration due or to become due from the owner on account of labor, services, material, fixtures, apparatus or machinery, furnished by the undersigned, but only to the extent of the payment aforesaid.

Dated this _____ day of _____, 20 _____.

[Affix corporate seal here.]

_____
(Name of sole owner, corporation or partnership)

ATTEST:

_____
(Signature of secretary of corporation)

_____(SEAL)
(Signature of sole owner or authorized representative of corporation or partnership)

PEORIA PARK DISTRICT
Weekly Workforce Report
Instructions

This weekly workforce report must be completed and returned to the Peoria Park District project manager for each week that you are working on Peoria Park District property. You are to report only those employees that are actually working on the Peoria Park District project identified on this report. Do not report employees that are not working on the project identified on this report.

If you have further questions regarding this report, please contact the Owner's Project Manager.

I. Trade and Hour Breakdown Table

- List the different trades (carpenter, laborer, plumber, etc.) and report the number of hours by race/gender for each trade;
- Total the hours for each trade on the right.

II. New Hires by Race and Gender

- If additional employees are hired for the job, please record the number of employees hired by race/gender.

III. Total Project Employee Breakdown

- Please track total hours by race/gender for the project if project lasts longer than a week.

Weekly Workforce Report (Peoria Park District Form) Date:_____ Week Ending: _____

Contractor/Subcontractor:_____ Project: _____

Trade & Hour Breakdown:

TRADE	FEMALE HOURS	CAUCASIAN HOURS	AFRICAN-AMERICAN HOURS	HISPANIC HOURS	NATIVE AMERICAN HOURS	ASIAN, PAC. ISLANDER HOURS	TOTAL HOURS

New Hires by Race & Gender

TRADE	CAUCASIAN	AFRICAN-AMERICAN	HISPANIC	NATIVE AMERICAN	ASIAN, PACIFIC ISLANDER	MALE	FEMALE

Total Project Employee Breakdown

	CAUCASIAN	AFRICAN-AMERICAN	HISPANIC	NATIVE AMERICAN	ASIAN, PACIFIC ISLANDER	MALE	FEMALE

CERTIFIED PAYROLL FORM
(Contractor May Use Own Form)

NAME OF CONTRACTOR ☐ OR SUBCONTRACTOR ☐ ADDRESS

PAYROLL NO. FOR WEEK ENDING PROJECT AND LOCATION PROJECT OR CONTRACT NO.

NAME, ADDRESS, TELEPHONE NUMBER AND SOCIAL SECURITY NUMBER OF EMPLOYEE	WORK CLASSIFICATION	DAY DATE	HOURS WORKED EACH DAY							TOTAL HOURS	RATE OF PAY	GROSS AMOUNT EARNED	DEDUCTIONS			TOTAL DEDUCTIONS	NET WAGES PAID PER WEEK
													FICA	WITHHOLDING TAX	OTHER		
		O.T.															
		ST.															
		O.T.															
		ST.															
		O.T.															
		ST.															
		O.T.															
		ST.															
		O.T.															
		ST.															
		O.T.															
		ST.															
		O.T.															
		ST.															
		O.T.															
		ST.															
		O.T.															
		ST.															
		O.T.															
		ST.															

DATE_____

I, _____ _____

(Name of Signatory Party) (Title)]

do hereby state:

(1) That I pay or supervise the payment of the persons employed by

_____ on the

(Contractor of Subcontractor)

_____; that during the payroll period commencing on the

_____ day of _____, _____, and ending the _____ day of _____, _____,

all persons employed on said project have been paid the full weekly wages earned, that no rebates have been or will be made either directly or indirectly to or on behalf of said

_____ from the full

(Contractor or Subcontractor)

weekly wages earned by any person and that no deductions have been made either directly or indirectly from the full wages earned by any person, other than permissible deductions authorized by law.

(2) That any payrolls otherwise under this contract required to be submitted for the above period are correct and complete; that the wage rates for laborers or mechanics contained therein are not less than the applicable wage rates mandated by the Illinois Prevailing Wage Act and that the classifications set forth therein for each laborer or mechanic conform with the work performed.

REMARKS:	
NAME AND TITLE	SIGNATURE

THE WILLFUL FALSIFICATION OF ANY OF THE ABOVE STATEMENTS MAY SUBJECT THE CONTRACTOR OR SUBCONTRACTOR TO CIVIL OR CRIMINAL PROSECUTION. SEE SECTION 5 (820 ILCS 130/5) OF THE PREVAILING WAGE ACT OF THE STATE OF ILLINOIS.

(3) _____ does remit/does not remit (circle correct statement) contributions to fringe benefit funds that are jointly
(Contractor or Subcontractor)
maintained and jointly governed by one or more employers and one or more labor organizations in accordance with the Federal Labor Management Relations Act (LMRA).

(4) If _____ does not remit contributions to a fringe benefit fund that is jointly maintained and jointly governed
(Contractor or Subcontractor)
by one or more employers and one or more labor organizations in accordance with the LMRA, but does remit contributions to a fringe benefit fund, the following information is required:

(a) The worker's hourly fringe benefit rates: _____

(b) The name and address of each fringe benefit fund: _____

(c) The plan sponsor of each fringe benefit fund, if applicable: _____

(d) The plan administrator of each fringe benefit fund, if applicable: _____

Form **W-9**
(Rev. August 2013)
Department of the Treasury
Internal Revenue Service

Request for Taxpayer Identification Number and Certification

Give Form to the requester. Do not send to the IRS.

Print or type
See **Specific Instructions** on page 2.

Name (as shown on your income tax return)

Business name/disregarded entity name, if different from above

Check appropriate box for federal tax classification:
☐ Individual/sole proprietor ☐ C Corporation ☐ S Corporation ☐ Partnership ☐ Trust/estate

☐ Limited liability company. Enter the tax classification (C=C corporation, S=S corporation, P=partnership) ▶ _____

☐ Other (see instructions) ▶

Exemptions (see instructions):
Exempt payee code (if any) _____
Exemption from FATCA reporting code (if any) _____

Address (number, street, and apt. or suite no.)

Requester's name and address (optional)

City, state, and ZIP code

List account number(s) here (optional)

Part I Taxpayer Identification Number (TIN)

Enter your TIN in the appropriate box. The TIN provided must match the name given on the "Name" line to avoid backup withholding. For individuals, this is your social security number (SSN). However, for a resident alien, sole proprietor, or disregarded entity, see the Part I instructions on page 3. For other entities, it is your employer identification number (EIN). If you do not have a number, see *How to get a TIN* on page 3.

Note. If the account is in more than one name, see the chart on page 4 for guidelines on whose number to enter.

Social security number
☐☐☐ – ☐☐ – ☐☐☐☐

Employer identification number
☐☐ – ☐☐☐☐☐☐☐

Part II Certification

Under penalties of perjury, I certify that:

1. The number shown on this form is my correct taxpayer identification number (or I am waiting for a number to be issued to me), and
2. I am not subject to backup withholding because: (a) I am exempt from backup withholding, or (b) I have not been notified by the Internal Revenue Service (IRS) that I am subject to backup withholding as a result of a failure to report all interest or dividends, or (c) the IRS has notified me that I am no longer subject to backup withholding, and
3. I am a U.S. citizen or other U.S. person (defined below), and
4. The FATCA code(s) entered on this form (if any) indicating that I am exempt from FATCA reporting is correct.

Certification instructions. You must cross out item 2 above if you have been notified by the IRS that you are currently subject to backup withholding because you have failed to report all interest and dividends on your tax return. For real estate transactions, item 2 does not apply. For mortgage interest paid, acquisition or abandonment of secured property, cancellation of debt, contributions to an individual retirement arrangement (IRA), and generally, payments other than interest and dividends, you are not required to sign the certification, but you must provide your correct TIN. See the instructions on page 3.

Sign Here **Signature of U.S. person ▶** **Date ▶**

General Instructions

Section references are to the Internal Revenue Code unless otherwise noted.

Future developments. The IRS has created a page on IRS.gov for information about Form W-9, at *www.irs.gov/w9*. Information about any future developments affecting Form W-9 (such as legislation enacted after we release it) will be posted on that page.

Purpose of Form

A person who is required to file an information return with the IRS must obtain your correct taxpayer identification number (TIN) to report, for example, income paid to you, payments made to you in settlement of payment card and third party network transactions, real estate transactions, mortgage interest you paid, acquisition or abandonment of secured property, cancellation of debt, or contributions you made to an IRA.

Use Form W-9 only if you are a U.S. person (including a resident alien), to provide your correct TIN to the person requesting it (the requester) and, when applicable, to:

1. Certify that the TIN you are giving is correct (or you are waiting for a number to be issued),

2. Certify that you are not subject to backup withholding, or

3. Claim exemption from backup withholding if you are a U.S. exempt payee. If applicable, you are also certifying that as a U.S. person, your allocable share of any partnership income from a U.S. trade or business is not subject to the withholding tax on foreign partners' share of effectively connected income, and

4. Certify that FATCA code(s) entered on this form (if any) indicating that you are exempt from the FATCA reporting, is correct.

Note. If you are a U.S. person and a requester gives you a form other than Form W-9 to request your TIN, you must use the requester's form if it is substantially similar to this Form W-9.

Definition of a U.S. person. For federal tax purposes, you are considered a U.S. person if you are:

- An individual who is a U.S. citizen or U.S. resident alien,
- A partnership, corporation, company, or association created or organized in the United States or under the laws of the United States,
- An estate (other than a foreign estate), or
- A domestic trust (as defined in Regulations section 301.7701-7).

Special rules for partnerships. Partnerships that conduct a trade or business in the United States are generally required to pay a withholding tax under section 1446 on any foreign partners' share of effectively connected taxable income from such business. Further, in certain cases where a Form W-9 has not been received, the rules under section 1446 require a partnership to presume that a partner is a foreign person, and pay the section 1446 withholding tax. Therefore, if you are a U.S. person that is a partner in a partnership conducting a trade or business in the United States, provide Form W-9 to the partnership to establish your U.S. status and avoid section 1446 withholding on your share of partnership income.

In the cases below, the following person must give Form W-9 to the partnership for purposes of establishing its U.S. status and avoiding withholding on its allocable share of net income from the partnership conducting a trade or business in the United States:

• In the case of a disregarded entity with a U.S. owner, the U.S. owner of the disregarded entity and not the entity,

• In the case of a grantor trust with a U.S. grantor or other U.S. owner, generally, the U.S. grantor or other U.S. owner of the grantor trust and not the trust, and

• In the case of a U.S. trust (other than a grantor trust), the U.S. trust (other than a grantor trust) and not the beneficiaries of the trust.

Foreign person. If you are a foreign person or the U.S. branch of a foreign bank that has elected to be treated as a U.S. person, do not use Form W-9. Instead, use the appropriate Form W-8 or Form 8233 (see Publication 515, Withholding of Tax on Nonresident Aliens and Foreign Entities).

Nonresident alien who becomes a resident alien. Generally, only a nonresident alien individual may use the terms of a tax treaty to reduce or eliminate U.S. tax on certain types of income. However, most tax treaties contain a provision known as a "saving clause." Exceptions specified in the saving clause may permit an exemption from tax to continue for certain types of income even after the payee has otherwise become a U.S. resident alien for tax purposes.

If you are a U.S. resident alien who is relying on an exception contained in the saving clause of a tax treaty to claim an exemption from U.S. tax on certain types of income, you must attach a statement to Form W-9 that specifies the following five items:

1. The treaty country. Generally, this must be the same treaty under which you claimed exemption from tax as a nonresident alien.

2. The treaty article addressing the income.

3. The article number (or location) in the tax treaty that contains the saving clause and its exceptions.

4. The type and amount of income that qualifies for the exemption from tax.

5. Sufficient facts to justify the exemption from tax under the terms of the treaty article.

Example. Article 20 of the U.S.-China income tax treaty allows an exemption from tax for scholarship income received by a Chinese student temporarily present in the United States. Under U.S. law, this student will become a resident alien for tax purposes if his or her stay in the United States exceeds 5 calendar years. However, paragraph 2 of the first Protocol to the U.S.-China treaty (dated April 30, 1984) allows the provisions of Article 20 to continue to apply even after the Chinese student becomes a resident alien of the United States. A Chinese student who qualifies for this exception (under paragraph 2 of the first protocol) and is relying on this exception to claim an exemption from tax on his or her scholarship or fellowship income would attach to Form W-9 a statement that includes the information described above to support that exemption.

If you are a nonresident alien or a foreign entity, give the requester the appropriate completed Form W-8 or Form 8233.

What is backup withholding? Persons making certain payments to you must under certain conditions withhold and pay to the IRS a percentage of such payments. This is called "backup withholding." Payments that may be subject to backup withholding include interest, tax-exempt interest, dividends, broker and barter exchange transactions, rents, royalties, nonemployee pay, payments made in settlement of payment card and third party network transactions, and certain payments from fishing boat operators. Real estate transactions are not subject to backup withholding.

You will not be subject to backup withholding on payments you receive if you give the requester your correct TIN, make the proper certifications, and report all your taxable interest and dividends on your tax return.

Payments you receive will be subject to backup withholding if:

1. You do not furnish your TIN to the requester,

2. You do not certify your TIN when required (see the Part II instructions on page 3 for details),

3. The IRS tells the requester that you furnished an incorrect TIN,

4. The IRS tells you that you are subject to backup withholding because you did not report all your interest and dividends on your tax return (for reportable interest and dividends only), or

5. You do not certify to the requester that you are not subject to backup withholding under 4 above (for reportable interest and dividend accounts opened after 1983 only).

Certain payees and payments are exempt from backup withholding. See *Exempt payee code* on page 3 and the separate Instructions for the Requester of Form W-9 for more information.

Also see *Special rules for partnerships* on page 1.

What is FATCA reporting? The Foreign Account Tax Compliance Act (FATCA) requires a participating foreign financial institution to report all United States account holders that are specified United States persons. Certain payees are exempt from FATCA reporting. See *Exemption from FATCA reporting code* on page 3 and the Instructions for the Requester of Form W-9 for more information.

Updating Your Information

You must provide updated information to any person to whom you claimed to be an exempt payee if you are no longer an exempt payee and anticipate receiving reportable payments in the future from this person. For example, you may need to provide updated information if you are a C corporation that elects to be an S corporation, or if you no longer are tax exempt. In addition, you must furnish a new Form W-9 if the name or TIN changes for the account, for example, if the grantor of a grantor trust dies.

Penalties

Failure to furnish TIN. If you fail to furnish your correct TIN to a requester, you are subject to a penalty of $50 for each such failure unless your failure is due to reasonable cause and not to willful neglect.

Civil penalty for false information with respect to withholding. If you make a false statement with no reasonable basis that results in no backup withholding, you are subject to a $500 penalty.

Criminal penalty for falsifying information. Willfully falsifying certifications or affirmations may subject you to criminal penalties including fines and/or imprisonment.

Misuse of TINs. If the requester discloses or uses TINs in violation of federal law, the requester may be subject to civil and criminal penalties.

Specific Instructions

Name

If you are an individual, you must generally enter the name shown on your income tax return. However, if you have changed your last name, for instance, due to marriage without informing the Social Security Administration of the name change, enter your first name, the last name shown on your social security card, and your new last name.

If the account is in joint names, list first, and then circle, the name of the person or entity whose number you entered in Part I of the form.

Sole proprietor. Enter your individual name as shown on your income tax return on the "Name" line. You may enter your business, trade, or "doing business as (DBA)" name on the "Business name/disregarded entity name" line.

Partnership, C Corporation, or S Corporation. Enter the entity's name on the "Name" line and any business, trade, or "doing business as (DBA) name" on the "Business name/disregarded entity name" line.

Disregarded entity. For U.S. federal tax purposes, an entity that is disregarded as an entity separate from its owner is treated as a "disregarded entity." See Regulation section 301.7701-2(c)(2)(iii). Enter the owner's name on the "Name" line. The name of the entity entered on the "Name" line should never be a disregarded entity. The name on the "Name" line must be the name shown on the income tax return on which the income should be reported. For example, if a foreign LLC that is treated as a disregarded entity for U.S. federal tax purposes has a single owner that is a U.S. person, the U.S. owner's name is required to be provided on the "Name" line. If the direct owner of the entity is also a disregarded entity, enter the first owner that is not disregarded for federal tax purposes. Enter the disregarded entity's name on the "Business name/disregarded entity name" line. If the owner of the disregarded entity is a foreign person, the owner must complete an appropriate Form W-8 instead of a Form W-9. This is the case even if the foreign person has a U.S. TIN.

Note. Check the appropriate box for the U.S. federal tax classification of the person whose name is entered on the "Name" line (Individual/sole proprietor, Partnership, C Corporation, S Corporation, Trust/estate).

Limited Liability Company (LLC). If the person identified on the "Name" line is an LLC, check the "Limited liability company" box only and enter the appropriate code for the U.S. federal tax classification in the space provided. If you are an LLC that is treated as a partnership for U.S. federal tax purposes, enter "P" for partnership. If you are an LLC that has filed a Form 8832 or a Form 2553 to be taxed as a corporation, enter "C" for C corporation or "S" for S corporation, as appropriate. If you are an LLC that is disregarded as an entity separate from its owner under Regulation section 301.7701-3 (except for employment and excise tax), do not check the LLC box unless the owner of the LLC (required to be identified on the "Name" line) is another LLC that is not disregarded for U.S. federal tax purposes. If the LLC is disregarded as an entity separate from its owner, enter the appropriate tax classification of the owner identified on the "Name" line.

Other entities. Enter your business name as shown on required U.S. federal tax documents on the "Name" line. This name should match the name shown on the charter or other legal document creating the entity. You may enter any business, trade, or DBA name on the "Business name/disregarded entity name" line.

Exemptions

If you are exempt from backup withholding and/or FATCA reporting, enter in the *Exemptions* box, any code(s) that may apply to you. See *Exempt payee code* and *Exemption from FATCA reporting code* on page 3.

Exempt payee code. Generally, individuals (including sole proprietors) are not exempt from backup withholding. Corporations are exempt from backup withholding for certain payments, such as interest and dividends. Corporations are not exempt from backup withholding for payments made in settlement of payment card or third party network transactions.

Note. If you are exempt from backup withholding, you should still complete this form to avoid possible erroneous backup withholding.

The following codes identify payees that are exempt from backup withholding:

1—An organization exempt from tax under section 501(a), any IRA, or a custodial account under section 403(b)(7) if the account satisfies the requirements of section 401(f)(2)

2—The United States or any of its agencies or instrumentalities

3—A state, the District of Columbia, a possession of the United States, or any of their political subdivisions or instrumentalities

4—A foreign government or any of its political subdivisions, agencies, or instrumentalities

5—A corporation

6—A dealer in securities or commodities required to register in the United States, the District of Columbia, or a possession of the United States

7—A futures commission merchant registered with the Commodity Futures Trading Commission

8—A real estate investment trust

9—An entity registered at all times during the tax year under the Investment Company Act of 1940

10—A common trust fund operated by a bank under section 584(a)

11—A financial institution

12—A middleman known in the investment community as a nominee or custodian

13—A trust exempt from tax under section 664 or described in section 4947

The following chart shows types of payments that may be exempt from backup withholding. The chart applies to the exempt payees listed above, 1 through 13.

IF the payment is for . . .	THEN the payment is exempt for . . .
Interest and dividend payments	All exempt payees except for 7
Broker transactions	Exempt payees 1 through 4 and 6 through 11 and all C corporations. S corporations must not enter an exempt payee code because they are exempt only for sales of noncovered securities acquired prior to 2012.
Barter exchange transactions and patronage dividends	Exempt payees 1 through 4
Payments over $600 required to be reported and direct sales over $5,000[1]	Generally, exempt payees 1 through 5[2]
Payments made in settlement of payment card or third party network transactions	Exempt payees 1 through 4

[1] See Form 1099-MISC, Miscellaneous Income, and its instructions.

[2] However, the following payments made to a corporation and reportable on Form 1099-MISC are not exempt from backup withholding: medical and health care payments, attorneys' fees, gross proceeds paid to an attorney, and payments for services paid by a federal executive agency.

Exemption from FATCA reporting code. The following codes identify payees that are exempt from reporting under FATCA. These codes apply to persons submitting this form for accounts maintained outside of the United States by certain foreign financial institutions. Therefore, if you are only submitting this form for an account you hold in the United States, you may leave this field blank. Consult with the person requesting this form if you are uncertain if the financial institution is subject to these requirements.

A—An organization exempt from tax under section 501(a) or any individual retirement plan as defined in section 7701(a)(37)

B—The United States or any of its agencies or instrumentalities

C—A state, the District of Columbia, a possession of the United States, or any of their political subdivisions or instrumentalities

D—A corporation the stock of which is regularly traded on one or more established securities markets, as described in Reg. section 1.1472-1(c)(1)(i)

E—A corporation that is a member of the same expanded affiliated group as a corporation described in Reg. section 1.1472-1(c)(1)(i)

F—A dealer in securities, commodities, or derivative financial instruments (including notional principal contracts, futures, forwards, and options) that is registered as such under the laws of the United States or any state

G—A real estate investment trust

H—A regulated investment company as defined in section 851 or an entity registered at all times during the tax year under the Investment Company Act of 1940

I—A common trust fund as defined in section 584(a)

J—A bank as defined in section 581

K—A broker

L—A trust exempt from tax under section 664 or described in section 4947(a)(1)

M—A tax exempt trust under a section 403(b) plan or section 457(g) plan

Part I. Taxpayer Identification Number (TIN)

Enter your TIN in the appropriate box. If you are a resident alien and you do not have and are not eligible to get an SSN, your TIN is your IRS individual taxpayer identification number (ITIN). Enter it in the social security number box. If you do not have an ITIN, see *How to get a TIN* below.

If you are a sole proprietor and you have an EIN, you may enter either your SSN or EIN. However, the IRS prefers that you use your SSN.

If you are a single-member LLC that is disregarded as an entity separate from its owner (see *Limited Liability Company (LLC)* on page 2), enter the owner's SSN (or EIN, if the owner has one). Do not enter the disregarded entity's EIN. If the LLC is classified as a corporation or partnership, enter the entity's EIN.

Note. See the chart on page 4 for further clarification of name and TIN combinations.

How to get a TIN. If you do not have a TIN, apply for one immediately. To apply for an SSN, get Form SS-5, Application for a Social Security Card, from your local Social Security Administration office or get this form online at *www.ssa.gov*. You may also get this form by calling 1-800-772-1213. Use Form W-7, Application for IRS Individual Taxpayer Identification Number, to apply for an ITIN, or Form SS-4, Application for Employer Identification Number, to apply for an EIN. You can apply for an EIN online by accessing the IRS website at *www.irs.gov/businesses* and clicking on Employer Identification Number (EIN) under Starting a Business. You can get Forms W-7 and SS-4 from the IRS by visiting IRS.gov or by calling 1-800-TAX-FORM (1-800-829-3676).

If you are asked to complete Form W-9 but do not have a TIN, apply for a TIN and write "Applied For" in the space for the TIN, sign and date the form, and give it to the requester. For interest and dividend payments, and certain payments made with respect to readily tradable instruments, generally you will have 60 days to get a TIN and give it to the requester before you are subject to backup withholding on payments. The 60-day rule does not apply to other types of payments. You will be subject to backup withholding on all such payments until you provide your TIN to the requester.

Note. Entering "Applied For" means that you have already applied for a TIN or that you intend to apply for one soon.

Caution: *A disregarded U.S. entity that has a foreign owner must use the appropriate Form W-8.*

Part II. Certification

To establish to the withholding agent that you are a U.S. person, or resident alien, sign Form W-9. You may be requested to sign by the withholding agent even if items 1, 4, or 5 below indicate otherwise.

For a joint account, only the person whose TIN is shown in Part I should sign (when required). In the case of a disregarded entity, the person identified on the "Name" line must sign. Exempt payees, see *Exempt payee code* earlier.

Signature requirements. Complete the certification as indicated in items 1 through 5 below.

1. Interest, dividend, and barter exchange accounts opened before 1984 and broker accounts considered active during 1983. You must give your correct TIN, but you do not have to sign the certification.

2. Interest, dividend, broker, and barter exchange accounts opened after 1983 and broker accounts considered inactive during 1983. You must sign the certification or backup withholding will apply. If you are subject to backup withholding and you are merely providing your correct TIN to the requester, you must cross out item 2 in the certification before signing the form.

3. Real estate transactions. You must sign the certification. You may cross out item 2 of the certification.

4. Other payments. You must give your correct TIN, but you do not have to sign the certification unless you have been notified that you have previously given an incorrect TIN. "Other payments" include payments made in the course of the requester's trade or business for rents, royalties, goods (other than bills for merchandise), medical and health care services (including payments to corporations), payments to a nonemployee for services, payments made in settlement of payment card and third party network transactions, payments to certain fishing boat crew members and fishermen, and gross proceeds paid to attorneys (including payments to corporations).

5. Mortgage interest paid by you, acquisition or abandonment of secured property, cancellation of debt, qualified tuition program payments (under section 529), IRA, Coverdell ESA, Archer MSA or HSA contributions or distributions, and pension distributions. You must give your correct TIN, but you do not have to sign the certification.

What Name and Number To Give the Requester

For this type of account:	Give name and SSN of:
1. Individual	The individual
2. Two or more individuals (joint account)	The actual owner of the account or, if combined funds, the first individual on the account [1]
3. Custodian account of a minor (Uniform Gift to Minors Act)	The minor [2]
4. a. The usual revocable savings trust (grantor is also trustee)	The grantor-trustee [1]
b. So-called trust account that is not a legal or valid trust under state law	The actual owner [1]
5. Sole proprietorship or disregarded entity owned by an individual	The owner [3]
6. Grantor trust filing under Optional Form 1099 Filing Method 1 (see Regulation section 1.671-4(b)(2)(i)(A))	The grantor*
For this type of account:	**Give name and EIN of:**
7. Disregarded entity not owned by an individual	The owner
8. A valid trust, estate, or pension trust	Legal entity [4]
9. Corporation or LLC electing corporate status on Form 8832 or Form 2553	The corporation
10. Association, club, religious, charitable, educational, or other tax-exempt organization	The organization
11. Partnership or multi-member LLC	The partnership
12. A broker or registered nominee	The broker or nominee
13. Account with the Department of Agriculture in the name of a public entity (such as a state or local government, school district, or prison) that receives agricultural program payments	The public entity
14. Grantor trust filing under the Form 1041 Filing Method or the Optional Form 1099 Filing Method 2 (see Regulation section 1.671-4(b)(2)(i)(B))	The trust

[1] List first and circle the name of the person whose number you furnish. If only one person on a joint account has an SSN, that person's number must be furnished.

[2] Circle the minor's name and furnish the minor's SSN.

[3] You must show your individual name and you may also enter your business or "DBA" name on the "Business name/disregarded entity" name line. You may use either your SSN or EIN (if you have one), but the IRS encourages you to use your SSN.

[4] List first and circle the name of the trust, estate, or pension trust. (Do not furnish the TIN of the personal representative or trustee unless the legal entity itself is not designated in the account title.) Also see *Special rules for partnerships* on page 1.

***Note.** Grantor also must provide a Form W-9 to trustee of trust.

Note. If no name is circled when more than one name is listed, the number will be considered to be that of the first name listed.

Secure Your Tax Records from Identity Theft

Identity theft occurs when someone uses your personal information such as your name, social security number (SSN), or other identifying information, without your permission, to commit fraud or other crimes. An identity thief may use your SSN to get a job or may file a tax return using your SSN to receive a refund.

To reduce your risk:

- Protect your SSN,
- Ensure your employer is protecting your SSN, and
- Be careful when choosing a tax preparer.

If your tax records are affected by identity theft and you receive a notice from the IRS, respond right away to the name and phone number printed on the IRS notice or letter.

If your tax records are not currently affected by identity theft but you think you are at risk due to a lost or stolen purse or wallet, questionable credit card activity or credit report, contact the IRS Identity Theft Hotline at 1-800-908-4490 or submit Form 14039.

For more information, see Publication 4535, Identity Theft Prevention and Victim Assistance.

Victims of identity theft who are experiencing economic harm or a system problem, or are seeking help in resolving tax problems that have not been resolved through normal channels, may be eligible for Taxpayer Advocate Service (TAS) assistance. You can reach TAS by calling the TAS toll-free case intake line at 1-877-777-4778 or TTY/TDD 1-800-829-4059.

Protect yourself from suspicious emails or phishing schemes. Phishing is the creation and use of email and websites designed to mimic legitimate business emails and websites. The most common act is sending an email to a user falsely claiming to be an established legitimate enterprise in an attempt to scam the user into surrendering private information that will be used for identity theft.

The IRS does not initiate contacts with taxpayers via emails. Also, the IRS does not request personal detailed information through email or ask taxpayers for the PIN numbers, passwords, or similar secret access information for their credit card, bank, or other financial accounts.

If you receive an unsolicited email claiming to be from the IRS, forward this message to *phishing@irs.gov*. You may also report misuse of the IRS name, logo, or other IRS property to the Treasury Inspector General for Tax Administration at 1-800-366-4484. You can forward suspicious emails to the Federal Trade Commission at: *spam@uce.gov* or contact them at *www.ftc.gov/idtheft* or 1-877-IDTHEFT (1-877-438-4338).

Visit IRS.gov to learn more about identity theft and how to reduce your risk.

Privacy Act Notice

Section 6109 of the Internal Revenue Code requires you to provide your correct TIN to persons (including federal agencies) who are required to file information returns with the IRS to report interest, dividends, or certain other income paid to you; mortgage interest you paid; the acquisition or abandonment of secured property; the cancellation of debt; or contributions you made to an IRA, Archer MSA, or HSA. The person collecting this form uses the information on the form to file information returns with the IRS, reporting the above information. Routine uses of this information include giving it to the Department of Justice for civil and criminal litigation and to cities, states, the District of Columbia, and U.S. commonwealths and possessions for use in administering their laws. The information also may be disclosed to other countries under a treaty, to federal and state agencies to enforce civil and criminal laws, or to federal law enforcement and intelligence agencies to combat terrorism. You must provide your TIN whether or not you are required to file a tax return. Under section 3406, payers must generally withhold a percentage of taxable interest, dividend, and certain other payments to a payee who does not give a TIN to the payer. Certain penalties may also apply for providing false or fraudulent information.

A complete copy of AIA Document A201, 1997 Edition, with Supplementary General Conditions incorporated, is available for review in the Peoria Park District's Planning, Design and Construction Office.

SUPPLEMENTARY GENERAL CONDITIONS

1. A. "GENERAL CONDITIONS OF THE CONTRACT FOR CONSTRUCTION", AIA Document A201, 1997 Edition, published by the American Institute of Architects, including revisions adopted before the date of the Project Manual, is hereby made part of these Specifications with same force and effect as though set forth in full.

B. The following modifies, changes, deletes from or adds to the General Conditions of the Contract for Construction (AIA Document A201, Fourteenth Edition, 1997). Where any Article of the General Conditions is modified or any Paragraph, Subparagraph or Clause thereof is modified or deleted by these Supplementary Conditions, the unaltered provisions of that Article, Paragraph, Subparagraph or Clause shall remain in effect.

C. Parenthesis ( ) indicates the appropriate section and Subparagraph of the General Conditions which each paragraph of the Supplementary General Conditions modifies or refers to.

2. INSERT THE FOLLOWING PHRASE TO PARAGRAPH (1.1.1) AFTER THE WORDS "The Contract Documents consist of the Agreement Between Owner and Contractor (hereinafter the Agreement)":

"the Contractor's Bid, the Advertisement for Bids, the Instructions to Bidders, sample forms and addenda relating to these,"

DELETE THE LAST SENTENCE OF PARAGRAPH (1.1.1).

3. ADD THE FOLLOWING SENTENCES TO END OF PARAGRAPH (1.2.1):

The Contractor shall notify the Owner's Representative immediately if discrepancies are discovered. Full-size or large-scale details or drawings shall govern small-scale drawings that the former are intended to amplify. Dimensions from drawings shall not be determined by scale or rule. Where the Drawings and Specifications conflict with each other or with themselves, the Owner's Representative (in consultation with the Architect, if any) will decide which conflicting requirement governs. Should discrepancies or doubt occur, Contractor shall not proceed with the Work without clarification from the Owner. Contractor shall request clarification in a reasonable time to avoid delays and increases in the Contract Sum.

ADD THE FOLLOWING PARAGRAPHS TO SECTION (1.2):

1.2.4 If any item or material shown on the Drawings is omitted from the Specifications, or vice-versa (except when the Drawings and Specifications clearly exclude such omitted item), and when such item or material is clearly required to complete the detail shown or specified, the Contractor shall furnish and install such item or material of the type and quality established by the balance of the detail shown and specified at no increase to the Contract Sum.

1.2.5 Where a typical or representative detail is shown on the Drawings, this detail shall constitute the standard for workmanship and materials throughout those parts of the Work.

1.2.6 Any Summary of Work as outlined in the Specifications shall not be deemed to limit the work required by the Contract Documents. The Contractor and each Subcontractor shall be responsible for carefully examining all Drawings, including all details, plans, elevations, sections, schedules and diagrams for each particular type of work, and for coordinating the Work described in the Drawings, with the related Specifications. The Contractor shall also be responsible for determining the exact scope of work for each type of work per the Contract Documents and Contractor shall endeavor to check cross-references of work excluded from any division. The Contract Sum is deemed to be based on a complete installation. When additional details or instructions are clearly required to complete the work, the Contractor is deemed to have made an allowance in the Contract Sum for completion of such Work consistent with the local standard of care.

1.2.7 The Drawings are intended to show the arrangement, design and extent of the Work and are schematic in nature. They are not to be scaled for roughing-in measurements or used as shop drawings.

4. ADD THE FOLLOWING PARAGRAPH TO SECTION (1.5):

1.5.3 Neither any oral representation by or oral agreement with any officer, agent, or employee of Owner or Architect before execution of this Contract shall affect or modify any of the Contractor's rights or obligations hereunder. Contractor is not aware of any facts that make misleading or inaccurate in any material respect any information Owner or Architect has furnished to Contractor which would have a material adverse affect on the Contract Time or Contract Sum which Contractor has not advised Owner or Architect of, and if, during the course of the performance of the Work, Contractor learns of any such facts it will so advise Owner. Contractor shall not be entitled to any adjustments in the Contract Time or the Contract Sum as a consequence of Contractor's breach of the terms of this Subparagraph.

5. IN PARAGRAPH (1.6.1) DELETE THE WORD "Architect" **IN THE FOURTH SENTENCE AND REPLACE IT WITH THE WORD "**Owner**".**

DELETE SENTENCES #7, #8, #9 STARTING WITH "The Contractor, Subcontractors, Sub-subcontractors and material or equipment suppliers are …."

6. DELETE PARAGRAPH (2.2.3) IN ITS ENTIRETY.

7. ADD THE FOLLOWING SENTENCE AT THE END OF PARAGRAPH (2.3.1):

"The Owner shall not be liable for any extra cost incurred by the Contractor by such an order."

8. IN PARAGRAPH (2.4.1) DELETE THE SECOND TO LAST SENTENCE.

9. IN PARAGRAPH (3.2.1, 3.2.2 AND 3.2.3) AFTER THE WORD "Architect**" ADD THE WORDS "**and Owner**".**

10. ADD THE FOLLOWING PARAGRAPHS TO SECTION (3.2):

3.2.4 Before starting any work, the Contractor shall examine work performed by others to which his work adjoins or is applied to and report to the Owner's Representative any conditions that will prevent the

satisfactory accomplishment of his work. Failure to notify the Owner's Representative of

deficiencies or faults in preceding work prior to commencing work shall constitute acceptance thereof and waiver of any claim of its unsuitability.

11. ADD THE FOLLOWING PARAGRAPHS TO SECTION (3.4):

3.4.4 Before ordering any material or doing any Work, the Contractor shall verify all measurements at the Project site and he shall be responsible for the correctness of same. No extra charge or compensation will be allowed to the Contractor on account of any difference between actual dimensions and the measurements shown on the Project Drawings.

3.4.5 The Contractor shall carefully inspect all materials delivered on and to the Project site and reject defective materials without waiting for the Owner's Representative or other representative of Owner to observe the materials.

12. ADD THE FOLLOWING PARAGRAPHS TO SECTION (3.5):

3.5.2 The Contractor agrees to assign to the Owner any and all manufacturer's warranties relating to materials and equipment furnished as part of the Work and further agrees to perform the Work in such manner so as to preserve any and all such manufacturer's warranties subject to installation directives and other terms of the Contract Documents. The Contractor agrees to deliver to the Owner, upon final payment, such assignments along with or as part of a reference manual, in form and detail reasonably acceptable to Owner, showing all such warranties and guarantees provided by the Contractor and Subcontractors. Such warranties and guarantees shall commence no sooner than the date of purchase from the supplier.

3.5.3 The warranty of Contractor provided in Paragraph 3.5 shall in no way limit or abridge the warranties of the suppliers of equipment and systems which are to comprise a portion of the Work, if they are broader, and all of such warranties shall be in form and substance as required by the Contract Documents. Contractor shall take no action or fail to act in any way which results in the termination or expiration of such third party warranties or which otherwise results in prejudice to the rights of the Owner under such warranties subject to installation directives and other terms of the Contract Documents. Contractor agrees to provide all notices required for the effectiveness of such warranties and shall include provisions in the contracts with the providers and manufacturers of such systems and equipment whereby Owner shall have a direct right of enforcement of such warranty obligations.

13. IN PARAGRAPH (3.6.1), DELETE THE WORD "Sales".

ADD THE FOLLOWING AT THE END OF PARAGRAPH (3.6.1):

The Peoria Park District is exempt from Federal, State and Local taxes. A certificate of exemption will be furnished upon request.

14. IN PARAGRAPH (3.10.2) BEFORE THE WORD "Architect's" **ADD THE WORDS** "Owner's and".

IN PARAGRAPH (3.10.2) AFTER THE WORD "Architect" **ADD THE WORDS** "and Owner's Representative".

ADD THE FOLLOWING PARAGRAPHS TO SECTION (3.10):

3.10.4 The construction schedule shall provide for the most expeditious and practicable execution of the Work. The Contractor shall also work closely with the Owner to confirm that the construction schedule accurately reflects the status of the Project. The Contractor's construction schedule shall be updated every month by the Contractor and submitted to the Owner.

.1 Whenever it becomes apparent from the updated construction schedule that any substantial completion previously established by the construction schedule cannot be met, the Contractor shall, at the Owner's request, take any or all of the following actions with no increase to the Contract Sum or Contract Time (unless the delay is caused by an event set forth in paragraph 8.3 of these General Conditions thereby permitting adjustment of the Contract Sum and/or Contract Time under Paragraph 4.3.5 of these General Conditions):

.1.1 Increase construction manpower to substantially return the Project to schedule;

.1.2 Increase the number of working hours per shift, shifts per day or the amount of construction equipment or any combination of the foregoing which will substantially return the Project to schedule;

.1.3 Reschedule activities to concurrently accomplish activities, to the maximum degree practicable, in the time required by the Contract Documents.

If the Contractor fails to take any of these actions Owner shall have the notice and other rights set forth in Paragraph 2.4.

15. IN PARAGRAPH (4.1.1) DELETE THE FIRST SENTENCE AND SUBSTITUTE THE FOLLOWING:

"The Architect, Owner's Representative, and Owner's Project Manager are defined in Paragraph C of "Section 01000 - General" of "Division 01000 - General Requirements".

16. IN PARAGRAPH (4.2.1) DELETE THE WORDS "and will be an Owner's Representative**".**

17. IN PARAGRAPH (4.2.2) DELETE THE WORDS "as a representative of the Owner".

18. IN PARAGRAPH (4.2.4) IN THE FIRST SENTENCE SUBSTITUTE THE WORD "Architect" **FOR THE WORD** "Owner" **AND SUBSTITUTE THE WORD** "Owner" **FOR THE WORD** "Architect"**.**

19. IN PARAGRAPH (4.2.5) DELETE THE WORD "Architect's" **AND** "Architect"**AND SUBSTITUTE THE WORDS** "Owner Representative's" **AND** "Owner Representative"**.**

20. IN PARAGRAPH (4.2.6) IN THE SECOND SENTENCE AFTER THE WORDS "will have authority" **INSERT THE WORDS** "upon written authorization from the Owner".

21. IN PARAGRAPH (4.2.8) DELETE THE WORD "prepare" **AND SUBSTITUTE THE WORDS** "assist the Owner's Representative in preparing".

22. IN PARAGRAPH (4.2.9) DELETE THE WORD "Architect" **AND SUBSTITUTE WORDS** "Owner's Representative, assisted by the Architect".

23. IN PARAGRAPH (4.2.11) IN THE FIRST SENTENCE DELETE THE WORDS "and decide".

24. IN PARAGRAPH (4.2.12) IN THE FIRST SENTENCE DELETE THE WORD "and decisions".

IN PARAGRAPH (4.2.12) IN THE SECOND SENTENCE DELETE THE WORDS "and initial decisions" **AND** "or decisions".

25. ADD PARAGRAPH TO SECTION (4.2):

4.2.14 Notwithstanding any other provision of this Agreement to the contrary, the Architect shall have no authority to order or approve any material deviation from the Contract Documents, whether or not such deviation affects the Contract Sum or other Substantial Completion Date (as defined herein). In the event any such deviation is sought, prior written approval from the Owner's Representative and the Owner must be obtained. The Architect may decide quality issues and may approve non-material deviations from the Contract Documents.

26. IN PARAGRAPH (4.3.4) IN THE FOURTH SENTENCE DELETE THE WORD "decision" **AND SUBSTITUTE THE WORD** "recommendation".

IN PARAGRAPH (4.3.4) IN THE LAST SENTENCE DELETE THE WORD "determination" **AND SUBSTITUTE THE WORD** "recommendation".

27. DELETE PARAGRAPH (4.3.10) IN ITS ENTIRETY.

28. DELETE PARAGRAPH (4.4.1) AND SUBSTITUTE THE FOLLOWING:

"Claims, disputes and other matters in question between the Contractor and the Owner relating to the execution or progress of the Work or the interpretation of the Contract Documents shall be initially referred in writing to the Architect for a recommendation."

29. IN PARAGRAPH (4.4.2) AFTER "(2)" ADD THE WORD "recommend" **AND CHANGE THE WORD** "reject" **TO** "rejecting".

IN PARAGRAPH (4.4.2) AFTER "(3)" ADD THE WORD "recommend" **AND CHANGE THE WORD** "approve" **TO** "approving".

IN PARAGRAPH (4.4.2) AT THE END OF THE SENTENCE DELETE THE WORD "resolve" **AND ADD THE WORDS** "make recommendation on".

30. IN PARAGRAPH (4.4.3) DELETE THE WORD "decision" **AND SUBSTITUTE THE WORD** "recommendation".

31. IN PARAGRAPH (4.4.4) IN THE LAST SENTENCE DELETE THE WORDS "either reject or approve the Claim" **AND SUBSTITUTE THE WORDS** "provide a recommendation regarding the Claim in accordance with Paragraph 4.2.2".

IN PARAGRAPH (4.4.4) AT THE END OF THE LAST SENTENCE DELETE THE WORDS "in whole or in part."

32. DELETE PARAGRAPHS (4.4.5) AND (4.4.6) IN THEIR ENTIRETY.

33. IN PARAGRAPH (4.4.8) DELETE THE WORD "resolution" **AND SUBSTITUTE THE WORDS** "final recommendation".

IN PARAGRAPH (4.4.8) AFTER THE WORD "Architect," **ADD THE WORD** "or".

IN PARAGRAPH (4.4.8) AT THE END OF THE SENTENCE DELETE THE WORDS "or by arbitration".

34. IN PARAGRAPH (4.5.1) DELETE THE WORD "decision" **AND SUBSTITUTE THE WORD** "recommendation".

IN PARAGRAPH (4.5.1) DELETE THE WORDS "arbitration or".

35. IN PARAGRAPH (4.5.2) IN THE SECOND SENTENCE DELETE THE WORDS "a demand for arbitration" **AND SUBSTITUTE THE WORDS** "legal or equitable proceedings".

IN PARAGRAPH (4.5.2) AFTER THE WORDS "proceed in advance of " **DELETE THE WORDS** "arbitration or".

36. IN PARAGRAPH (4.5.3) DELETE THE FIRST SENTENCE.

37. DELETE SECTION (4.6) IN ITS ENTIRETY.

38. IN PARAGRAPH (5.2.1) DELETE THE FIRST SENTENCE AND SUBSTITUTE:

> "The subcontractors/suppliers listed by the Contractor on the Major Subcontractor/Supplier List (submitted with the Bid) shall not be changed without the written consent of the Owner."

IN PARAGRAPH (5.2.1) IN THE SECOND SENTENCE DELETE THE WORDS "Architect will" **AND SUBSTITUTE THE WORDS** "Owner's Representative will".

IN PARAGRAPH (5.2.1) IN THE SECOND SENTENCE AFTER THE WORDS "promptly reply to" **ADD THE WORDS** "any request made by".

IN PARAGRAPH (5.2.1) IN THE SECOND SENTENCE AFTER THE WORDS "any such proposed" **ADD THE WORDS** "change in".

IN PARAGRAPH (5.2.1) IN THE LAST SENTENCE DELETE THE WORDS "Owner or Architect" **AND SUBSTITUTE THE WORDS** "Owner's Representative".

IN PARAGRAPH (5.2.1) IN THE LAST SENTENCE DELETE THE WORD "promptly" **AND ADD THE WORDS** "within 10 calendar days (of receipt of written request for such change from the Contractor)".

39. IN PARAGRAPH (6.2.2) BEFORE THE WORD "Architect" **ADD THE WORDS** "Owner and".

40. IN PARAGRAPH (6.3.1) DELETE THE WORD "Architect" **AND SUBSTITUTE THE WORD** "Owner".

41. IN PARAGRAPH (7.2.1) DELETE THE WORDS "the Architect" **AND SUBSTITUTE THE WORDS** "the Owner's Representative".

ADD THE FOLLOWING PARAGRAPHS TO SECTION (7.2):

> **7.2.3** A Change Order shall include all of the Contractor's costs associated therewith.

7.2.4 The Contractor shall not accept any request for a Change Order from any person other than the Owner and may not perform any work asserted to constitute a change in the Work until the Owner has approved the Change Order in writing, unless the Owner authorizes the Contractor, in writing, to proceed with a change prior to the Owner's final approval. Notwithstanding anything to the contrary herein, the Contractor shall not charge for overtime services in the performance of any Change Order Work, unless the Owner has specifically authorized overtime in writing. Owner may competitively bid changes in the Work and Contractor, Subcontractor and suppliers shall provide Owner with all documents Owner requests to facilitate such competitive bidding of changes in the Work.

7.2.5 There shall be no change in the Work, whether an alteration or addition to the Contract Sum or to any amounts due under the Contract Documents or to a change in the Contract Time, unless and until such alteration or addition has been authorized by a written Change Order executed and issued in accordance and compliance with the requirements with this Article 7 or by written authorization to proceed with such change in the Work signed by the Owner or as otherwise provided pursuant to the Contract Documents. The requirements set forth in this Paragraph 7.2.5 are of the essence. No claim that the Owner has been unjustly enriched by any alteration or addition to the Work, whether or not any such unjust enrichment to the Work or to the Owner in fact exists, shall form the basis of any claim for an increase in any amount due under the Contract Documents or a change in the Contract Time, and the terms of a fully-executed Change Order shall be conclusive.

42. IN PARAGRAPH (7.3.1) DELETE THE WORDS "the Architect" **AND SUBSTITUTE THE WORDS** "the Owner's Representative".

43. IN PARAGRAPH (7.3.4) DELETE THE WORDS "the Architect" **AND SUBSTITUTE THE WORDS** "the Owner's Representative".

44. IN PARAGRAPH (7.3.6) IN THE FIRST SENTENCE DELETE THE WORD "determined" **AND SUBSTITUTE THE WORD** "recommended".

45. IN PARAGRAPH (7.3.7) IN THE FIRST SENTENCE AFTER THE WORD "Architect" **ADD THE WORDS** "and the Owner's Representative".

46. IN PARAGRAPH (7.3.8) DELETE THE WORDS "the Architect" **AND SUBSTITUTE THE WORDS** "the Owner's Representative".

47. IN PARAGRAPH (7.3.9) DELETE THE WORD "determination" **AND SUBSTITUTE THE WORD** "recommendation".

48. IN PARAGRAPH (8.1.3) DELETE THE WORD "Architect" **AND SUBSTITUTE THE WORDS** "Owner's Representative".

49. ADD THE FOLLOWING PARAGRAPHS TO SECTION (8.2) .

8.2.4 All work shall be "Substantially Complete" as required by the **Instructions to Bidders** and the **Agreement Between Owner and Contractor.**

8.2.5 It is further agreed that said completion schedule is reasonable, and the Contractor shall prosecute said work regularly, diligently and continuously at such rate of progress as will insure full completion thereof within the time specified.

8.2.6 Provided, however, the following exceptions:

.1 Any preference, priority or allocation order duly issued by the United States Government.

.2 Any unforeseeable cause beyond the control and without the fault or negligence of the Contractor, including acts of God, or of a public enemy, acts of the Owner, acts of another Contractor in performance of a separate contract with the Owner, fire, floods, epidemics, quarantine restrictions, strikes, freight embargoes and unusually severe weather. The criteria on which the unusually severe weather shall be based is the average precipitation/temperatures received in the project area, as recorded over a period of the last five (5) years at the local area United States Weather Station. Any extension of time due to unusually severe weather must be requested by the Contractor on the basis of documented records of the actual precipitation/temperatures during the contract time period, compared with the normal/average for the area. Also, the criteria shall include the number of excessive precipitation or extreme cold days (i.e., days in which the temperature would adversely affect the type of work being constructed) over the same period and whether or not the Contractor's force worked on said days or stage of construction was affected.

.3 Any delays of subcontractors occasioned by any of the causes specified in this paragraph.

8.2.7 Provided further that the Contractor shall, within seven (7) days from the beginning of any such delay during the performance of the Contract, notify the Owner's Representative in writing of the alleged cause of such delay.

50. IN PARAGRAPH (8.3.1) DELETE THE WORDS “and arbitration”.

IN PARAGRAPH (8.3.1) DELETE THE WORD “determine” **AND SUBSTITUTE THE WORD** “recommend”.

51. DELETE PARAGRAPH (9.2.1) AND SUBSTITUTE THE FOLLOWING:

“Before the first Application for Payment, the Contractor shall submit to the Owner’s Representative a schedule of values allocated to various portions of the Work, prepared in such form and supported by such data to substantiate its accuracy as the Architect and Owner’s Representative may require. This schedule, unless objected to by the Architect and Owner’s Representative, shall be used as a basis for reviewing the Contractor’s Applications for Payment.”

52. IN THE FIRST SENTENCE OF (9.3.1), CHANGE "ten" **TO** "forty five”.

IN PARAGRAPH (9.3.1) IN THE FIRST SENTENCE DELETE THE WORD “Architect” **AND SUBSTITUTE THE WORDS** “Owner’s Representative”.

ADD THE FOLLOWING TO THE END OF PARAGRAPH (9.3.1):

Payment requests shall consist of AIA Documents #702 "Application and Certificate for Payment"; AIA #703 "Continuation Sheet"; Contractors Affidavit of Payment to Subcontractors and Suppliers; Weekly

Workforce Reports; Certified Payroll Form; and Waivers of Lien. (Waivers of Lien are required from the general contractor in the full amount of the current payment application, and from all subcontractors, suppliers, or workers who provide more than $10,000 of project material/labor of the Work. The waiver shall be in the amount(s) listed in the Contractor's Affidavit.) For final payment, the general contractor shall also provide a Waiver of Lien in the full amount of the contract price.

The Waiver of Lien and Contractor Affidavit forms used shall be the Peoria Park District's standard form(s): 1) "Final Waiver of Lien" (for general contractors), 2) "Waiver of Lien - General Contractor's Partial To Cover Only Certain Payments", 3) "Sub-Contractor's Final Waiver of Lien", 4) "Waiver of Lien - Sub-Contractor's Partial To Cover Only Certain Payments, and 5) "Contractor's Affidavit". (These forms are included in the Project Manual, and are the required Waiver of Lien forms for the project.)

(If the Contractor is unable to provide the required sub-contractor waiver at the time the application for payment is submitted (preferred method) alternatively, it may be provided at the time that payment is delivered by the District. If the sub-contractor waiver(s) still cannot be provided at that time, the District will provide "two-party" checks in which the Contractor and the sub-contractor are named jointly as payees.)

Format of AIA #703 shall follow that of "Schedule of Values". (See Division 01000 Article IV.) All payment requests shall reflect retainage in the amount of 10% of completed work.

53. IN PARAGRAPH (9.3.1.1) DELETE THE WORDS “or by interim determination of the Architect, but not yet included in Change Orders”.

54. ADD THE FOLLOWING SUB-PARAGRAPHS TO PARAGRAPH (9.3.1):

9.3.1.3 Upon Substantial Completion, the Owner will pay 95% percent of the amount due to the Contractor on account.

9.3.1.4 Monthly progress payments will be made by the Owner on projects lasting more than sixty days (from award of the bid to the Substantial Completion date given in the Supplementary Instructions to Bidders).

55. ADD THE FOLLOWING SUB-PARAGRAPHS TO PARAGRAPH (9.3.2):

9.3.2.1 Material stored on site will be considered for payment only when a Schedule of Stored Materials with appropriate values accompany the payment request as an attachment.

9.3.2.2 All material and work covered by partial payments made shall thereupon become the sole property of the Owner, but this provision shall not be construed as relieving the Contractor from the sole responsibility for the care and protection of material and work upon which payments have been made or the restoration of any damaged work, or as a waiver of the contract.

56. IN PARAGRAPH (9.4.1) DELETE THE WORDS “Architect” **AND** “Architect’s” **AND SUBSTITUTE THE WORDS “**Owner’s Representative” **AND** “Owner’s Representative’s”.

IN PARAGRAPH (9.4.1) DELETE THE PHRASE "with a copy to the Contractor".

57. IN THE FIRST SENTENCE OF PARAGRAPH (9.4.2) DELETE THE WORD “Architect”.

IN THE FIRST SENTENCE OF PARAGRAPH (9.4.2) AFTER THE WORDS "Architect's" **ADD THE WORDS** "and Owner's Representative's".

IN THE FOURTH SENTENCE OF PARAGRAPH (9.4.2) DELETE THE WORDS "Architect has" **AND SUBSTITUTE THE WORDS** "Owner's Representative and Architect have".

58. IN PARAGRAPH (9.5.1) DELETE THE WORDS "Architect" **AND** "Architect's" **AND SUBSTITUTE THE WORDS** "Owner's Representative **AND** "Owner's Representative's".

59. IN PARAGRAPHS (9.6.1, 9.6.3, AND 9.6.4) DELETE THE WORDS "Architect" **AND SUBSTITUTE THE WORDS** "Owner's Representative".

60. IN PARAGRAPH (9.7.1) DELETE THE WORD "Architect" **AND SUBSTITUTE THE WORDS** "Owner's Representative".

IN PARAGRAPH (9.7.1) DELETE THE WORDS "or awarded by arbitration".

61. IN PARAGRAPH (9.8.2) DELETE THE WORD "Architect" **AND SUBSTITUTE THE WORDS "**Owner's Representative".

62. IN THE FIRST SENTENCE OF PARAGRAPH (9.8.3) DELETE THE WORD "Architect" **AND SUBSTITUTE THE WORDS** "Owner's Representative assisted by the Architect".

IN THE SECOND AND THIRD SENTENCES OF PARAGRAPH (9.8.3) DELETE THE WORDS "Architect's" and "Architect" **AND SUBSTITUTE THE WORDS** "Owner's Representative's" and "Owner's Representative".

63. IN PARAGRAPH (9.8.4) DELETE THE WORD "Architect" **AND SUBSTITUTE THE WORDS** "Owner's Representative".

64. IN PARAGRAPH (9.9.1) DELETE THE WORD "Architect" **AND SUBSTITUTE THE WORDS** "Owner's Representative".

65. IN PARAGRAPH (9.10.1) IN THE FIRST SENTENCE AFTER THE FIRST TWO APPEARANCES OF THE WORD 'Architect" **ADD THE WORDS** "and Owner's Representative".

IN PARAGRAPH (9.10.1) DELETE THE THIRD AND FOURTH APPEARANCES OF THE WORD "Architect" and "Architect's" **AND SUBSTITUTE THE WORDS** "Owner's Representative" and "Owner's Representative's".

IN PARAGRAPH (9.10.1) AFTER THE FIFTH APPEARANCE OF THE WORD "Architect's" **ADD THE WORDS** "and Owner's Representative's".

IN THE LAST SENTENCE OF PARAGRAPH (9.10.1) DELETE THE WORD "Architect's" **AND SUBSTITUTE THE WORDS** "Owner's Representative's".

66. IN PARAGRAPH (9.10.2) DELETE THE WORD "Architect" **AND SUBSTITUTE THE WORD** "Owner's Representative".

67. ADD THE FOLLOWING SUB-PARAGRAPH TO PARAGRAPH (9.10.2):

9.10.2.1 When all items including items noted within Division 1000 General Requirements are found to be complete and in conformance with the Contract Documents, a final payment will be issued.

68. IN PARAGRAPH (9.10.3) DELETE THE WORD "Architect" **AND SUBSTITUTE THE WORDS** "Owner's Representative".

69. IN PARAGRAPH (11.1.1) IN THE FIRST SENTENCE AFTER THE PHRASE "as will protect the Contractor" **ADD THE WORDS** "Architect and Owner".

70. IN PARAGRAPH (11.1.2), IN THE FIRST SENTENCE DELETE THE WORDS "limits of liability specified in the Contract Documents" **AND SUBSTITUTE THE WORDS** "limits required in 'Attachment A – Project Specific Insurance Requirements' (which is included as the last section of the Project Manual and the requirements therein shall be made part of the Contract Documents),".

IN PARAGRAPH (11.1.2) AFTER THE FIRST SENTENCE ADD:

"In addition, if any of the work occurs within fifty feet of an active railroad line and the Contractor's general liability coverages provide for exclusions of coverage when working on or near a railroad, the Contractor shall provide a separate Railroad Protective Liability Insurance Policy naming the railroad as the insured party, with the coverage limits required by that railroad."

71. IN PARAGRAPH (11.1.3), AFTER THE WORDS "Certificates of insurance" **ADD THE WORDS** "and endorsements to the insurance policy(s) which are".

IN PARAGRAPH (11.1.3) AFTER THE WORDS "acceptable to the Owner" **ADD THE WORDS** "and naming the Owner, their agents and consultants as additional insured".

ADD THE FOLLOWING SUB-PARAGRAPHS TO PARAGRAPH (11.1)

11.1.4 The Contractor may, at his option, furnish Owner's Protective Liability Insurance in lieu of naming the Owner Additional Insured on the Contractor's policy, as required above. This insurance shall protect the Owner from claims as set forth in Paragraph 11.1.1 of the General Conditions, and to the limits required herein, as shown in "Attachment A".

11.1.5 The Contractor shall furnish two copies of each of the required Certificates or Endorsements for each copy of the Agreement which shall specifically set forth evidence of all coverage required by the Contract Documents. The form of the Certificate(s) or Endorsement(s) shall be those as required in "Attachment A". The Contractor shall also furnish to the Owner copies of any endorsements which limit coverage, or are subsequently issued amending coverage or limits of coverage.

72. DELETE PARAGRAPHS (11.3.1, 11.3.2, AND 11.3.3) IN THEIR ENTIRETY.

73. DELETE PARAGRAPH (11.4.1) AND SUBSTITUTE:

"If the work of the project is being completed by one general or prime contractor rather than multiple prime contractors, the Contractor shall purchase and maintain property insurance upon the entire Work at

the site to the full replacement value thereof. Such insurance shall be in a company or companies against which the Owner has no reasonable objection. This insurance shall include the interests of the Owner, the Contractor, Subcontractors and Sub-subcontractors in the Work.

74. AT THE END OF PARAGRAPH (11.4.1.1) ADD THE FOLLOWING SENTENCE: "The form of policy for this coverage shall be "Completed Value".

75. DELETE PARAGRAPH (11.4.1.2) IN ITS ENTIRETY.

76. DELETE PARAGRAPH (11.4.1.3) IN ITS ENTIRETY AND SUBSTITUTE:

"If by the terms of this insurance any mandatory deductibles are required, or if the Contractor should elect, with the concurrence of the Owner, to increase the mandatory deductible amounts or purchase this insurance with voluntary deductible amounts, the Contractor shall be responsible for payment of the amount of all deductibles in the event of a paid claim. If separate contractors are added as insureds to be covered by this policy, the separate contractors shall be responsible for payment of appropriate part of any deductibles in the event claims are paid on their part of the Project."

77. DELETE PARAGRAPHS (11.4.3, 11.4.4, AND 11.4.5) IN THEIR ENTIRETY.

78. DELETE PARAGRAPH (11.4.6) AND SUBSTITUTE:

"The Contractor shall file two certified copies of all policies with the Owner before exposure to loss can occur. If the Owner is damaged by the failure of the Contractor to maintain such insurance and to so notify the Owner, then the Contractor shall bear all reasonable costs properly attributable thereto.

79. DELETE PARAGRAPHS (11.4.7, 11.4.8, 11.4.9, AND 11.4.10) IN THEIR ENTIRETY.

80. DELETE PARAGRAPH (11.5.1) AND SUBSTITUTE:

"The Contractor shall furnish a Performance Bond and a separate Labor and Material Payment Bond, each for one hundred percent (100%) of the Contract Sum. Form of these bonds shall be as provided by the Owner in the Project Manual and no other form will be accepted. The Surety shall be authorized to do business in the State of Illinois and be acceptable to the Owner.

81. IN PARAGRAPH (12.1.1) DELETE THE WORD "Architect's" **AND SUBSTITUTE WORDS** "Owner's Representative's and Architect's". **DELETE THE WORD** "Architect" **AND SUBSTITUTE THE WORDS** "Owner's Representative".

82. IN PARAGRAPH (12.1.2) AFTER THE WORD "Architect" **ADD THE WORDS** "and Owner's Representative".

83. IN PARAGRAPH (12.2.1.1) AFTER THE WORD "Architect" **ADD THE WORDS** "and Owner's Representative".

84. IN PARAGRAPH (13.5.4) AFTER THE WORD "Architect" **ADD THE WORDS** "and Owner's Representative".

85. IN PARAGRAPH (14.1.1.3) DELETE THE WORD "Architect" **AND SUBSTITUTE THE WORDS** "Owner's Representative".

86. IN PARAGRAPH (14.2.2) DELETE THE PHRASE ", upon certification by the Architect that sufficient cause exists to justify such action,".

87. IN PARAGRAPH (14.2.4) DELETE THE WORD "Architect" **AND SUBSTITUTE THE WORDS** "Owner's Representative".

88. DELETE PARAGRAPH (14.4.3) IN ITS ENTIRETY AND SUBSTITUTE:

In case of such termination for the Owner's convenience, the Contractor shall be entitled to receive payment for Work executed, and costs incurred by reason of such termination. In no event, however, will such amounts exceed the Contract Sum reduced by the amount of prior payments except for increases pursuant to the claims procedure in the Contract Documents. Subcontracts, subsubcontracts, and purchase orders will contain appropriate provisions for termination for convenience under this Paragraph 14.4.

89. ADD THE FOLLOWING ARTICLE 15: LABOR, SAFETY AND WAGE STANDARDS TO THE GENERAL CONDITIONS OF THE CONTRACT:

ARTICLE 15
LABOR, WAGE, SAFETY, AND OTHER STANDARDS

15.1 LABOR STANDARDS. All employers shall comply with the Employment of Illinois Workers on Public Works Act [30 ILCS 570/1 to 570/7].

15.2 WAGE STANDARDS.

15.2.1 PREVAILING WAGE ACT: Wages and benefits to employees shall comply with all Federal and State of Illinois statutes pertaining to public works projects and specifically: Wages of Employees on Public Works [820 ILCS 130/1 - 12].

15.2.2 Not less than the prevailing rate of wages as determined by the Park District or the Department of Labor shall be paid to all laborers, workers and mechanics performing work under this contract. All contractor's bonds shall include a provision as will guarantee the faithful performance of such prevailing wage clause as provided by this bid specification or contract.

15.2.3 The terms "general prevailing rate of hourly wages", "general prevailing rate of wages" or "prevailing rate of wages" when used in this Act mean the hourly cash wages plus fringe benefits for training and apprenticeship programs approved by the U.S. Department of Labor, Bureau of Apprenticeship and Training, health and welfare, insurance, vacations and pensions paid generally, in the locality in which the work is being performed, to employees engaged in work of a similar character on public works.

15.2.4 PREVAILING WAGE ACT/FOIA
Contractors and subcontractors shall submit certified payroll on a monthly basis to the Park District in compliance with requirements of 820 ILCS 130/5. These records will be kept by the Park District for three years and may be reviewed by others through the Freedom of Information Act (FOIA). The Park District will exclude employee's address, telephone number, and social security number from public inspection.

15.3 SAFETY STANDARDS.

15.3.1 PROTECTION OF PERSONS AND PROPERTY: The Contractor and his subcontractors shall, at all times, comply with applicable provisions of Federal, State and Local laws.

15.3.1.1 The Contractor and his sub-contractors shall have written programs complying with Occupational Safety and Health Administration standards and/or Illinois Department of Labor requirements including, but not limited to the following: hazardous communications, hearing conservation, respirator use, confined space entry, scaffolding, ladders, ventilation, flammable and combustible liquids, and lockout/tagout. The Contractor shall submit documentation of their programs at the request of the Owner's Representative, or Occupational Safety and Health Administration and/or Illinois Department of Labor officials.

15.4 EQUAL EMPLOYMENT OPPORTUNITY/AFFIRMATIVE ACTION/SEXUAL HARASSMENT

15.4.1 During the performance of the contract, the contractor agrees to the following:

15.4.1.1 That it will not discriminate against any employee or applicant for employment because of race, color, religion, sex, marital status, national origin or ancestry, age, physical or mental handicap unrelated to ability, or an unfavorable discharge from military service; and further that it will examine all job classifications to determine if minority persons or women are under-utilized and will take appropriate affirmative action to rectify any such under-utilization.

15.4.1.2 That, if it hires additional employees in order to perform his contract or any portion thereof, it will determine the availability (in accordance with the Rules and Regulations of the Illinois Department of Human Rights) of minorities and women in the area(s) from which it may reasonably recruit and it will hire for each job classification for which employees are hired in such a way that minorities and women are not under-utilized.

15.4.1.3 That, in all solicitations or advertisements for employees placed by it or on its behalf, it will state that all applicants will be afforded equal opportunity without discrimination because of race, color, religion, sex, marital status, national origin or ancestry, age, physical or mental handicap unrelated to ability or an unfavorable discharge from military service.

15.4.1.4 That it will have a written sexual harassment policy to include at the minimum, the following:

15.4.1.4.1 a definition of sexual harassment under the law;

15.4.1.4.2 a description of sexual harassment utilizing examples;

15.4.1.4.3 a formalized complaint procedure;

15.4.1.4.4 a statement of victim's rights;

15.4.1.4.5 directions on how to contact the Illinois Department of Human Rights. Out-of-state companies must provide directions for filing with the enforcement

agency within their state. Companies that issue a standard policy for all business locations must prepare an addendum providing directions on how to contact the appropriate enforcement agency; and

15.4.1.4.6 A recitation that there cannot be any retaliation against employees who elect to file charges.

15.4.1.4.7 In addition, it is recommended that the employer post a copy of the sexual harassment policy in a prominent and accessible location and distribute it in a manner to assure notice to all employees on an annual basis.

15.4.1.4.8 The Illinois Human Rights Act specifically provides that all documents may meet, but cannot exceed, the sixth grade literacy level. Therefore, the employers sexual harassment policy must be stated in plain language and in "laymen's terms".

15.4.1.5 That it will send to each labor organization or representative of workers with which it has or is bound by a collective bargaining or other agreement or understanding, a notice advising such labor organization or representative of the contractor's obligations under the Illinois Human Rights Act and the Department's Rules and Regulations. If any such labor organization or representative fails or refuses to cooperate with the contractor in its efforts to comply with such Act and Rules and Regulations, the contractor will promptly so notify the Department and the contracting agency and will recruit employees from other sources when necessary to fulfill its obligations thereunder.

15.4.1.6. That it will submit reports as required by the Department's Rules and Regulations, furnish all relevant information as may from time to time be requested by the Department or the contracting agency, and in all respects comply with the Illinois Human Rights Act and the Department's Rules and Regulations.

15.4.1.7. That it will permit access to all relevant books, records, accounts and work sites by personnel of the contracting agency and the Department for purposes of investigation to ascertain compliance with the Illinois Human Rights Act and the Department's Rules and Regulations.

15.4.1.8. That it will include verbatim or by reference the provisions of this clause in every subcontract it awards under which any portion of the contract obligations are undertaken or assumed, so that such provisions will be binding upon such subcontractor. In the same manner as with other provisions of this contract, the contractor will be liable for compliance with applicable provisions of this clause by such subcontractors; and further it will promptly notify the contracting agency and the Department in the event any subcontractor fails or refuses to comply therewith. In addition, the contractor will not utilize any subcontractor declared by the Illinois Human Rights Commission to be ineligible for contracts or subcontracts with the State of Illinois or any of its political subdivisions or municipal corporations.

15.4.2 In the event of the contractor's non-compliance with the provisions of the Illinois Human Rights Act, the contractor may be declared ineligible for future contracts or subcontracts with the State of Illinois or any of its political subdivisions or municipal corporation, and the contract may be cancelled or voided in whole or in part, and such other sanctions or penalties may be imposed or remedies invoked as provided by statute or regulations.

END OF SUPPLEMENTARY GENERAL CONDITIONS

SECTION 010000 - GENERAL

A. SUMMARY OF THE WORK
1. The Work covered under this Contract consists of that work described by the Invitation to Bid, the Instructions/Supplemental Instructions to Bidders, the Bid/Proposal Form, the General/Supplemental Conditions of the Contract, these General Requirements, the Plans, and the Technical Specifications.
2. The Contractor shall be responsible for all items incidental to the scope of the Work intended by the bidding documents as per A.1 above, including but not limited to, expenses incurred by the requirements of various Sections of Division 010000, unless specifically stated otherwise herein.
3. Changes to the Work as required by approved Change Orders shall be at the expense of the Owner, however, requests for additional payments made after the fact will not be considered.

B. OCCUPANCY BY OWNER.
1. The Owner reserves the right to occupy any portion of the project before it has been entirely completed, with the understanding that such occupancy shall in no way constitute acceptance of the work, in whole or in part, or of any work performed under the Contract, provided that such occupancy does not substantially interfere with completion of the work by the Contractor.

SECTION 012100 – ALLOWANCES

A. GENERAL
1. This section includes administrative and procedural requirements governing allowances
   a) Selected material and equipment are specified in the Contract Documents by allowances. In some cases, these allowances include installation. Allowances have been established in lieu of additional requirements and to defer selection of actual materials and equipment to a later date when additional information is available for evaluation. If necessary, additional requirements will be issued by Change Order.
   b) Types of allowances may include the following:
      1) Lump-sum allowances.
      2) Unit–cost allowances.
      3) Inspection and testing allowances.

B. SELECTION AND PURCHASE
1. At the earliest practical date after award of the Contract, advise the Owner’s Representative of the date when the final selection and purchase of each product or system described by an allowance must be completed to avoid delaying the Work.
2. At the Owner’s Representative’s request, obtain proposals for each allowance for use in making final selections. Include recommendations that are relevant to performing the Work.
3. Purchase products and systems selected by the Architect from the designated supplier.
4. Coordinate material and their installation for each allowance with related materials and installations to ensure that each allowance item is completely integrated and interfaced with related work.

C. SUBMITTALS
1. Submit proposals for purchase of products or systems included in allowances, in the form specified for Change Orders.
2. Submit invoices or delivery slips to show the actual quantities of materials delivered to the site for use in fulfillment of each allowance.

D. UNUSED MATERIALS
1. Return unused materials to the manufacturer or supplier for credit to the Owner, after installation has been completed and accepted.
   a) When requested by the owner’s Representative, prepare unused material for storage by Owner where it is not economically practical to return the material for credit. When directed by the Owner’s Representative, deliver unused material to the Owner’s storage space. Otherwise, disposal of the unused material is the Contractor’s responsibility.

E. SCHEDULE OF ALLOWANCES
1. ALLOWANCE #1: None, unless so stated herein
2. ALLOWANCE #2: None, unless so stated herein

SECTION 012300 – ALTERNATES

A. Alternates to the Bid are set forth in the Supplementary Instructions to Bidders and are listed in the Bid Form.
1. Accepted Alternates have been incorporated into the Agreement.

B. Bid Alternate pricing, as set forth in the Supplementary Instructions to Bidders and the Bid Form, shall be good for a minimum of 90 calendar days after the date of the Bid opening, and the Owner reserves the right to accept Alternates up to that time.

SECTION 012600 - CHANGE ORDERS

A. OWNER'S REPRESENTATIVE'S FIELD ORDERS
1. From time to time during progress of the Work the Owner's Representative may issue an "Owner's Representative's Field Order" which interprets the Contract Documents or orders minor changes in the Work without change in Contract Sum or Contract Time.

2. Should the Contractor consider that a change in Contract Sum or Contract Time is required he shall submit an itemized proposal to the Owner's Representative **immediately and before proceeding with the Work**. If the proposal is found to be satisfactory and in proper order, the Field Order will be superseded by a Change Order.

B. PROPOSAL REQUESTS

1. From time to time during the progress of work the Owner's Representative may issue a "Proposal Request" for an itemized quotation for changes to the Work which may result in a change to the Contract Sum or Contract Time. This document **is not a Change Order** and is not a direction to proceed with the changes described therein.

C. CHANGE ORDERS

1. Change Orders are written documents describing changes in the Work, in the Contract Sum, in the Contract Time of Completion, or any combination thereof. Change Orders must be signed by both the Owner and the Architect/Owner's Representative prior to proceeding with the Work subject to the Change Order. **REQUESTS FOR "EXTRA'S" OR OTHER ADDITIONAL PAYMENTS OVER AND ABOVE THE CURRENT CONTRACT SUM WILL NOT BE CONSIDERED WITHOUT THE PRIOR, WRITTEN APPROVAL OF BOTH THE OWNER AND THE OWNER'S REPRESENTATIVE.**
   a) INITIATION. Change Orders may be initiated by a "Field Order" or "Proposal Request" per paragraphs "A" and "B" above. In addition, either the Contractor or Owner (or Owner's Representative) may initiate a Change Order through:
      1) Discovery of a discrepancy in the Contract Documents,
      2) Discovery of concealed conditions or,
      3) Discovery, during the course of the Work, of methods of accomplishing the Work in a better or more economical manner.
   b) PROCESSING CHANGE ORDERS.
      1) Change Orders will be dated and will be numbered in sequence.
      2) The Change Order will describe the change or changes, or will refer to the Proposal Requests or Field Orders involved.
      3) The Owner's Representative will issue three copies of each Change Order to the Contractor.
      4) The Contractor promptly shall sign all three copies and return them to the Owner's Representative.
      5) The Owner and Owner's Representative will retain two signed copies in their files, and will forward one signed copy to the Contractor.
      6) Should the Contractor disagree with the stipulated change in Contract Sum or change in Contract Time of Completion, or both:
         i) The Contractor promptly shall return all three of the Change Orders, unsigned by him, to the Owner's Representative with a letter signed by the Contractor stating the reason or reasons for the Contractor's disagreement.
         ii) The Contractor's disagreement with the Change Order shall not in any way relieve the Contractor of his responsibility to proceed with the change as ordered and to seek settlement of the dispute under pertinent provisions of the Contract Documents.

SECTION 012900 – PAYMENT PROCEDURES

A. SCHEDULE OF VALUES

1. Prior to the start of construction, submit a proposed Schedule of Values to the Owner's Representative which shows a detailed breakdown of the agreed Contract Sum showing values allocated to each of the various parts of the Work, as specified herein and in other provisions of the Contract Documents.
   a) The Schedule of Values is required to be compatible (in the same format) with the Application for Payment "Continuation Sheet", AIA G703.
2. If not requested to submit additional data or to modify the submitted Schedule of Values within ten (10) days of submittal, the initially submitted Schedule shall be deemed approved.

B. APPLICATIONS FOR PAYMENT

1. Progress payments will be made only if specifically called for in the Agreement. In all other cases, the Contractor may submit an Application for Payment (3 copies) upon Substantial Completion (95% of the Contract Sum), with the balance of the Contract Sum to be paid at Final Completion.
   a) **Paragraph #52 of the Supplementary General Conditions defines the documentation required for each payment request.**
   b) Applications for payment shall be delivered to the Owner's Project Manager at:

Department of Planning, Design, and Construction
Peoria Park District
Bradley Park Equipment Service
1314 N. Park Road
Peoria, Illinois 61604

SECTION 013100 - PROJECT MEETINGS

A. PRECONSTRUCTION CONFERENCE

1. Conduct a preconstruction conference prior to the start of the Work, at the location of the Work. Provide attendance by the designated personnel of the Contractor, including Sub-contractor's and/or suppliers of major components of the Work, if requested by the Owner's Representative.
   a) AGENDA. Discuss items of significance that could affect progress including such topics as:
      1) Tentative construction schedule.
      2) Critical Work sequencing.
      3) Designation of responsible personnel.
      4) Procedures for processing field decisions and Change Orders.
      5) Procedures for processing Applications for Payment.
      6) Distribution of Contract Documents.
      7) Submittal of Shop Drawings, Product Data and Samples.
      8) Preparation of record documents.
      9) Use of the premises.

10) Office, Work and storage areas.
11) Equipment deliveries and priorities.
12) Safety procedures.
13) First aid.
14) Security.
15) Housekeeping.
16) Working hours.
17) Permits and Permitting Agency Requirements

B. PROJECT MEETINGS
1. Project Meetings will be held per the schedule determined at the Preconstruction Conference, or as needed for proper coordination and administration of the project.
a) AGENDA
1) Review and correct or approve minutes of the previous progress meeting.
2) Review progress of the Work since last meeting, including status of submittals for approval.
3) Identify problems which impede planned progress.
4) Develop corrective measures and procedures to regain planned schedule.
5) Complete other current business.

C. REPORTING
1. Distribute copies of the minutes of each meeting to each party present, and to other parties who should have been present, no later than three business days after each meeting.

SECTION 013300 - SUBMITTALS

A. Requirements for shop drawings, samples, mock-ups, product data, etc., relative to specific elements or components of the work are called out in the various sections of the Technical Specifications.
1. Submit items to allow for Owner's Representative's review and approval, potential re-submission if full approval is not given, ordering, delivery, fabrication time, etc., so as to allow the Work to proceed in a timely manner and in conformance with the project schedule.

B. OTHER CONTRACTOR SUBMITTALS
1. Unless otherwise modified the Contractor shall also submit:
a) A "bar chart" type proposed construction schedule, within ten days after award of the Bid.
b) Other submittals as required by other section of Division 010000.

C. Submission of the required Bonds and Certificate of Insurance are to be made prior to the Owner's issuance of a Notice to Proceed.

SECTION 014000 – QUALITY/REGULATORY REQUIREMENTS

A. GENERAL: Contractors shall comply with all laws, rules and regulations governing the work.
1. When Contractor observes that contract documents are at variance with specified codes, notify Owner's Representative in writing immediately. Owner's Representative will issue all changes in accord with General Conditions.
2. When Contractor performs any work knowing or having reason to know that the work is contrary to such laws, rules and regulations and fails to so notify the Owner's Representative, Contractor shall pay all costs arising therefrom. However, it will not be the Contractor's primary responsibility to make certain that the contract documents are in accord with such laws, rules and regulations.

B. SAFETY:
1. Comply with all federal, state, and local laws, rules and regulations governing the installation/construction of the work.
2. Develop and utilize safety program and training for workmen and sub-contractor employees.

C. TESTING
1. TESTS AND INSPECTIONS REQUIRED
a) Provide all tests and inspections required by governmental agencies having jurisdiction, as required by provisions of the Contract Documents and/or as specifically required by sections of the Technical Specifications.
2. PAYMENT FOR TESTING
a) Include within the Contract Sum an amount sufficient to cover all testing, re-testing, and inspections required by the Contract documents and/or the Technical Specifications. Additionally pay for all testing and inspections required by all governmental agencies having jurisdiction.
1) The Owner will pay for any testing and inspecting specifically requested by the Owner's Representative which are over and above those described in Paragraph 1.a) above.
2) When initial tests (over and above those defined by 1.a) above) requested by the Owner's Representative indicate non-compliance with the Contract Documents, costs of initial tests associated with that non-compliance will be deducted by the Owner from the Contract Sum, and subsequent retesting occasioned by the non-compliance shall be performed by the same testing laboratory and the costs thereof shall be paid by the Contractor.
3. WAIVER OF INSPECTION AND/OR TESTS
a) Specified inspections and/or tests may be waived only by the specific written approval of the Owner's Representative, and **such waivers will be expected to result in credit to the Owner equal to normal cost of such inspection and/or test.**

SECTION 014200 - REFERENCE STANDARDS AND DEFINITIONS

A. Copies of Standards: Each entity engaged in construction on the Project is required to be familiar with industry standards applicable to that entity's construction activity. Copies of applicable standards are not bound with the Contract Documents.

1. Where copies of standards are needed for performance of a required construction activity the Contractor shall obtain copies directly from the publication source.
2. Although copies of standards needed for enforcement of requirements may be included as part of required submittals the Architect reserves the right to require the Contractor to submit additional copies as necessary for enforcement of requirements.

B. Abbreviations and Names: Trade association names and titles of general standards are frequently abbreviated. Where such acronyms or abbreviations are used in the Specifications or other Contract Documents they mean the recognized name of the trade association standards generating organization authority having jurisdiction or other entity applicable to the context of the text provision. Refer to the Encyclopedia of Associations, published by Gale Research Co. available in most libraries.

C. Definitions: Architect, Owner's Representative, and Owner's Project Manager
1. ARCHITECT: The Architect shall be the person or entity designated by the Owner as the Owner's Representative and shall be identified as such in the Agreement Between Owner and Contractor, and is referred to throughout the Contract Documents as if singular in number and masculine in gender.
2. OWNER'S REPRESENTATIVE: The duties of the Owner's Representative as listed in the Project Manual, include but are not limited to, construction phase observation and technical administration services.
   a) LIMITS OF AUTHORITY: The Owner's Representative shall be authorized to provide approvals and interpretations concerning the plans, specifications and progress of the Work as bid, but is not authorized to change the scope of the Work on behalf of the Owner.
3. OWNER'S PROJECT MANAGER: The Owner's Project Manager will represent, act on behalf of, and provide interface between the Owner and the Contractor in respect to contract administration and/or other matters which affect the scope of the Work.
   a) Unless defined otherwise in the Project Manual, the Owner's Project Manager shall be a designated member of the Planning, Design, and Construction Division of the Peoria Park District.
   b) The Owner's Project Manager will also be the Owner's Representative and will provide construction phase observation and technical administration services, if a consultant Architect has not been engaged to do so, by the Owner.

SECTION 015000 – TEMPORARY FACILITIES & CONTROLS

A. MOBILIZATION
1. Furnish all labor, tools, materials, equipment, and incidentals necessary for preparatory work.
2. Provide and establish personnel, equipment, supplies, materials, offices or buildings, and other facilities necessary to work on the project.
3. Demobilize all of the above and remove temporary facilities at the completion of the project.

B. BARRIERS, PROTECTION OF SITE AND PROPERTY
1. GENERAL
   a) Owner's improvements to remain, existing utilities, as well as adjacent site improvements shall be protected from damage by barriers, guards and coverings. Damaged work shall be replaced or repaired to condition prevailing at time of signing of contract, at no additional cost to Owner.
   b) Provide 6' high, continuous chain link or orange plastic (used materials acceptable) construction fence to prohibit unauthorized personnel or public entry from the site of the Work. (Substitutions may be considered; submit request in writing to the Owner's Representative.)
   c) Contractor shall provide, erect and maintain additional planking, fences, protective canopies, railings, shoring, lights, warning signs, etc., as needed for the protection of adjacent property and the public.
2. LANDSCAPE PROTECTION
   a) All live, healthy trees, shrubs, etc. on the site or on the street fronts of the site, not specified to be removed and not interfering with installation of new work required hereunder, shall be protected against injury from construction operations.
   b) All shade trees which are to remain and which are liable to damage during the building operations, shall be properly boxed and protected from damage during the course of construction work as directed by the Park District. **No site-related work shall occur until the required tree protection (fencing, boxing, etc.) has been installed and approved by the Owner or his representative.**
      1) LIQUIDATED DAMAGES: The Owner reserves the right to charge the Contractor for damage to existing trees, and to deduct the charges from the amounts due the Contractor, based on the following schedule:

aa)	Broken limbs 1" or over in diameter:	$50 per caliper inch of limb
bb)	Trenching or grading within the tree dripline or 20' from the trunk, whichever is less, of trees 4" or over in caliper diameter:	$100 per tree/per foot within dripline, or within 20' minimum if applicable
cc)	Damage to tree trunks, including "barking", nicking, gouging, etc.	$150 per caliper inch of tree, per each injury

3. BARRIERS/CONSTRUCTION FENCE MATERIALS
   a) 2" open mesh chain link fence, 72" high minimum, galvanized, with appropriately sized posts; gates where indicated.
   b) Alternate barrier fencing materials may be acceptable, however, no additional payments will be made on account of approval of alternate barrier/safety fencing materials.
   c) Materials may be new or used, if in serviceable condition.
4. WATCHMAN SERVICE
   a) The Owner will not be responsible for loss due to theft or other damage which is not covered under Property Insurance. The Contractor shall make such arrangements for watchman service as he considers necessary and he shall be responsible for all loss or damage of his property, equipment, material, etc., at the site, and he shall make good such damage or loss without any additional cost to the Owner.

5. EXISTING IMPROVEMENTS - PROTECTION
   a) The Contractor shall be entirely responsible for all injuries to water pipes, electric conduits or cables, drains, sewers, gas mains, poles, telephones and telegraph lines, streets, pavements, sidewalks, curbs, culverts, retaining walls, building walls, foundation walls, or other structures of any kind met with during the progress of the Work, and shall be liable for damages to public or private property resulting therefrom.

C. CONSTRUCTION ACCESS, ROADS, AND PARKING AREAS
1. CONTRACTOR'S USE OF PREMISES
   a) The Contractor shall require that all personnel who will enter upon the Owner's property certify their awareness of and familiarity with the requirements of this Section.
2. CONSTRUCTION ACCESS
   a) To avoid traffic conflict with vehicles of the Owner's employees and customers, and to avoid over-loading of streets and driveways elsewhere on the Owner's property, limit the access of trucks and equipment to the route shown (IF SHOWN) on the Drawings as "Access Route". If access route is not shown on the Drawings, coordinate construction access and routes with the Owner's Project Manager.
   b) Do not permit such vehicles to park on any street or other area of the Owner's property except in the area shown on the Drawings as "Contractor's Parking Area". If not shown on the drawings, the Contractor's Parking Area shall be as designated by the Owner's Project Manager.
   c) Provide adequate protection for curbs and sidewalks over which trucks and equipment pass to reach the job site.
3. SECURITY
   a) Restrict the access of all persons entering upon the Owner's property in connection with the Work to the Access Route and to the actual site of the Work.

D. TEMPORARY ENVIRONMENTAL CONTROLS
1. GENERAL
   a) Provide temporary environmental controls at the site of the Work to ensure that construction operations have no harmful effects on adjacent properties and on members of the public who may come in proximity to the Work, and/or the employees of the Owner who are engaged in regular daily tasks and operations and are unable to be relocated to another work site during construction operations.
   b) Owner reserves the right to stop the Work, at the Contractor's expense, until the Contractor provides necessary control measures for the conditions listed below; additionally, the Owner reserves the right to perform or have performed necessary control measures, should the Contractor refuse to do so at the time requested and to deduct the cost of those expenses from the amount due the Contractor.
2. DUST CONTROL
   a) Provide dust control materials to minimize dust from construction operations. Prevent air-borne dust from dispersing into the atmosphere.
3. WATER CONTROL
   a). Control surface water to prevent damage to the project, the site and adjoining properties.
      1) Control fill, grading, and ditching to direct surface drainage away from excavations, pits, tunnels, and other construction areas; direct drainage to proper runoff channels or storm drainage utilities.
   b) Provide, operate and maintain hydraulic equipment of adequate capacity to control surface water.
   c) Dispose of drainage water in a manner to prevent flooding, erosion silting, or runoff of silt or sediment or other damage to all portions of the site or to adjoining properties.
4. RODENT CONTROL
   a) Provide rodent control to prevent infestation of construction or storage areas.
      1) Use methods and materials which will not adversely affect conditions at the site or on adjoining properties.
5. DEBRIS CONTROL
   a) Maintain all areas free of extraneous debris, waste, and rubbish.
6. POLLUTION CONTROL
   a) Prevent contamination of soil, water or atmosphere by the discharge of noxious substances from construction operations.
   b) Provide equipment and personnel, perform emergency measures to contain all spillages, and to remove contaminated soils or liquids.
      1) Excavate and dispose of all contaminated earth off-site. Replace with suitable compacted fill and topsoil.
   c) Take special measures, as necessary, to prevent harmful substances from entering public waters, including lakes, streams, intermittent drainage channels, and storm or sanitary sewers.
7. EROSION CONTROL
   a) Plan and execute construction and earthwork in a manner to control surface drainage from cuts and fills, and from borrow and waste disposal areas, to prevent erosion and sedimentation.
      1) Schedule the Work to minimize the areas of bare soil exposed at one time, if possible.
      2) Provide temporary control measures such as berms, dikes, and drains to prevent runoff of silt or sediment from the site.
      3) Comply with Section 015713.

E. PROJECT IDENTIFICATION AND SIGNAGE
1. GENERAL
   a) Provide and install project identification sign, if located and/or called out on the Drawings.
2. SUBMITTALS
   a) Provide shop drawing(s) of proposed sign/sign installation to Owner's Representative for approval, prior to installation
3. INSTALLATION
   a) Provide project sign as detailed on Drawings
   b) If not detailed on Drawings provide project identification sign per the following minimum requirement:
      1) Content
         aa) Name of project
         bb) Name of Owner
         cc) Name of Architect(s) and major consultants
         dd) Names of Contractor and major subcontractors

ee) Allow additional 200 characters of text explaining the project

2) Construction

aa) Size: 4' x 8'

bb) Materials: Min. 5/8" AC DFPA Exterior Plywood, with (2) 4" x 4" x 12' long pressure treated post supports

cc) Paint: paint front and back, seal edges, provide content as approved by Owner's Representative. Conform to recognized sign painting standards in selection of paint materials. Use only professional sign painter with three years minimum experience to apply sign graphics and lettering.

3) Install sign in a manner consistent with length of time of construction operations. Remove sign and fill post holes at project completion.

F. FIELD OFFICES

1. TEMPORARY FACILITIES

Provide and pay for temporary (new, or used if in serviceable condition) facilities and controls needed for the Work, if called out on the Drawings, which may include, but are not necessarily limited to:

a) Temporary utilities such as heat, water, electricity, and telephone;

b) Field office for the Contractor's personnel (required if shown on the Drawings; otherwise at the Contractor's option and expense).

1) Conform with requirements for Engineer's Field Office Type B, as defined in Article 646.04 of the Standard Specifications for Road and Bridge Construction - Illinois Department of Transportation.

c) Sanitary facilities;

d) Enclosures such as tarpaulins, barricades, and canopies;

e) Temporary fencing of the construction site;

f) Project sign.

2. Comply with Federal, State, and local codes and regulations.

a) Maintain temporary facilities and controls in proper and safe condition throughout the progress of the work. The Contractor is responsible for conformance with all safety codes and regulations for all Work under his jurisdiction, including that of Sub-Contractors.

3. Locate temporary facilities as shown on the Drawings, or as approved by the Owner's Representative if not shown on the Drawings.

SECTION 015713 – EROSION & SEDIMENT CONTROL

A. RELATED DOCUMENTS

1. Drawings and general provisions of the Contract, including General and Supplementary Conditions and Division 1 Specification Sections, apply to this Section.

B. SUMMARY

1. This Section includes the following:

a) Site erosion and sediment control

b) Silt fencing

c) Ditch checks

d) Erosion control blankets

e) Culvert and inlet protection

f) Stabilized entrance

2. Related Sections include the following:

a) Division 31 – Earthwork.

b) Division 32 – Exterior Improvements.

3. Erosion and Sediment Control Statement: The Peoria Park District takes the issue of construction related erosion and sediment control extremely seriously. The Peoria Park District is a community leader in the conservation and protection of our area's natural resources. This project will be watched closely by both staff and citizens for compliance with erosion and sediment control regulations and specifications.

C. QUALITY ASSURANCE

1. Materials and methods of construction shall comply with the following standards:

a) Illinois Department of Transportation

b) City of Peoria

D. PRODUCTS

1. Silt Fencing

a) Fabric for silt fencing shall consist of woven or nonwoven filaments of polypropylene, polyester, or polyethylene. Fabric shall be resistant to degradation by ultraviolet light and heat exposure. Fabric shall be rot, insect, and mildew proof, and have a high resistance to tearing.

1) Fabric shall comply with the following physical properties:

aa)	Grab tensile strength (lb) – ASTM D4632	200 (min)
bb)	Grab elongation @ break (%) – ASTM D4632	12
cc)	Burst strength (psi) – ASTM D751	250 (min)
dd)	Trapezoidal tear strength (lb) – ASTM D4533	75
ee)	Width (ft)	3.5 (min)
ff)	Weight (oz/sq. yd) – ASTM D3776	4.0
gg)	Equivalent opening size	30 (nonwoven)
hh)	(EOS) sieve no. – Corps of Engrs. CS-02215	50 (woven)

2. Ditch Checks
   a) Ditch checks will consist of silt fencing with the addition of wire reinforcement.
   b) Wire shall be 9 gauge.
   c) Alternate: Straw bales may be used in lieu of silt fencing
3. Posts
   a) Posts shall be standard "T" or "U" steel posts or wood with a minimum cross section of 3 square inches. Posts shall be a minimum of 60" in length. Posts shall be driven a minimum of 24" into the ground.
4. Erosion Control Blankets
   a) Excelsior Blanket: Excelsior blanket shall consist of a machine produced mat of wood excelsior of 80% 6" or longer fiber length. The wood from which the excelsior blanket is cut shall be properly cured to achieve adequately curled and barbed fibers.
      1) The blanket shall be of consistent thickness, with the fiber evenly distributed over the entire area of the blanket. The excelsior blanket shall be covered on the top side with a 90 day biodegradable extruded plastic mesh netting having an approximate minimum opening of 16 x 16 mm (5/8 x 5/8 in.) to an approximate maximum opening of 50 x 25 mm (2 x 1 in.). The netting shall be substantially adhered to the excelsior blanket by a knitting process using biodegradable thread or by an applied degradable adhesive. The netting shall be substantially adhered to the excelsior by a knitting process using biodegradable thread. The netting shall be entwined with the excelsior blanket for maximum strength and ease of handling.
      2) The excelsior blanket shall comply with the following:

aa)	Minimum width, ± 25 mm (1 in.)	600 mm (24 in.)
bb)	Minimum mass ± 10%	0.34 kg/sm (0.63 lb/sq yd)
cc)	Minimum length of roll, approximately	45 m (150 ft)

      3) The excelsior blanket shall be smolder resistant.
5. Culvert And Inlet Protection
   a) Culvert protection shall consist of a ditch check immediately upstream of every culvert entrance. Ditch check shall be installed to protect culvert interior from sedimentation.
   b) Inlet protection shall consist of purpose made devices by:

      Dandy Products, Inc.
      P. O. Box 1980
      Westerville, Ohio 43086-1980
      Phone: 1-800-591-2284
      Fax: 740-881-2791
      www.dandyproducts.com
      dlc@dandyproducts.com

      or

      NILEX, Inc.
      15171 E. Fremont Drive
      Centennial, CO 80112
      Phone: 1-800-537-4241
      Fax: 303-766-1110
      www.nilex.com
      denver@nilex.com

   c) "Or Equal" substitutions may be made with prior approval of Owner's Representative.
6. Stabilized Entrance
   a) Stabilized entrance shall consist of coarse aggregate laid over geotextile fabric.
   b) Dimensions: 70' long by 14' wide.
   c) Geotextile Fabric: as per requirements of "silt fencing".
   d) Aggregate: IDOT Class CA-1, CA-2, cA-3, or CA-4.

E. EXECUTION
1. Site Erosion And Sediment Control
   a) Contractor is responsible for fulfilling terms of City of Peoria Erosion Control Permit and all applicable portions of the "Erosion, Sediment, and Stormwater Control Ordinance of the City of Peoria".
   b) Install control devices as shown on erosion control plan.
   c) Install additional measures as needed to control erosion and sedimentation on the site.
2. Silt Fencing Installation
   a) Install silt fencing according to details in plans. The silt fence shall be entrenched to a minimum depth of 8".
   b) The silt fence shall be installed on the contour, with the ends extending up-slope.
   c) Install silt fencing before commencing site clearing work.
3. Ditch Check Installation
   a) Install ditch checks according to details in plans.
   b) Install ditch checks at locations shown on plans.
   c) Install additional ditch checks as needed to control erosion within drainage swales as site conditions and weather dictate.
   d) Install ditch checks immediately after swales are graded.
4. Erosion Control Blankets Installation
   a) Install erosion control blankets as needed to control erosion in drainage swales and at the direction of the Owner's Representative.
   b) Anchor stakes shall be driven at a spacing of 2 feet on center.
5. Culvert And Inlet Protection Installation
   a) Install culvert protection at upstream entrances to all culverts.
   b) Install culvert protection to intercept waterborne silt and sediment and prevent it from entering culvert pipes.
   c) Install immediately after culvert installation.
   d) Install inlet protection according to manufacturer's written instructions at each inlet immediately after inlet construction.

6. Stabilized Construction Entrance Installation
   a) Install stabilized construction entrance and other approved measures as necessary to limit tracking of soil on to all paved surfaces.
   b) Comply with all City of Peoria codes limiting tracking of soil on to City streets.
7. Maintenance
   a) Inspect silt fences after each rainfall. Repair fencing, failures, end runs, and erosion cuts immediately.
   b) Remove soil from silt fencing after each rainfall.
   c) Erosion control maintenance and repair shall be considered incidental to the contract.
   d) Tracked soil and sediment shall be removed from all paved surfaces on a daily basis.
   e) Replace or provide new erosion and sediment control measures as needed during construction to provide protection to site and surrounding property for the entire time of construction, or until project is complete.
8. Close-Out
   a) Remove silt fencing and other erosion and sediment control devices after lawn or seeding has been established.
   b) Soil deposits remaining in place after silt fence is no longer required shall be dressed to conform to existing grade, and seeded with appropriate seed material.

SECTION 016000 – PRODUCT REQUIREMENTS

A. MATERIALS AND EQUIPMENT
1. STANDARD SPECIFICATIONS
   a) Reference herein to known standard specifications of governmental agencies or technical societies shall refer to the latest edition of such specifications, adopted and published at date of these Specifications.
2. MANUFACTURED ARTICLES
   a) All manufactured articles, materials and equipment to be incorporated in the work shall be new (unless otherwise specified) and of the quality specified and shall be used, erected, installed, connected, cleaned and conditioned as directed by and in conformity with job conditions to produce the best results obtainable.
      1) Field measurements for all special products and materials which requires close tolerances or fitting into other items or components of the Work shall be taken on the job by the party furnishing the materials.
3. QUALITY ASSURANCE
   a) Per the Supplementary Instructions to Bidders, the Bidder by submission of a signed bid form, agrees to install products and equipment by brand and model name or names specified in the Technical Specifications, Divisions 02-35. Substitutions are allowed only in conformance to the following:
      1) Proprietary Specification Requirement: Where only a single product or manufacturer is named, provide the product indicated. No substitutions will be permitted.
      2) Semiproprietary Specification Requirement: Where two or more products or manufacturers are named, provide one of the products indicated. No substitutions will be permitted
         aa) Where either of the two cases above prevail, and the named product is accompanied by "or approved equal" substitutions will be allowed only upon written approval of the Owner's Representative prior to submission of bids.
      3) Non-Proprietary Specification Requirement: When the Specifications lists products or manufacturers that are available and are accompanied by "or equal", the Contractor may propose any available product that complies with the Specifications' requirements; however, the Owner's Representative shall determine if the produced item complies with those requirements.
      4) Descriptive Specification Requirement: Where Specifications describe a product or assembly listing exact characteristics required, with or without use of a brand, trade, or model name, provide a product or assembly that provides the characteristics and otherwise complies with the Contract Documents.
      5) Performance Specification Requirement: Where Specifications require compliance with performance requirements, provide products or assembly that comply with these requirements and are recommended by the manufacturer for the application indicated.
      6) Compliance with Standards, Codes, and Regulations: Where the Specifications only require compliance with an imposed code, standard, or regulation, select a product that complies with the standard, code, or regulation specified.
   b) VISUAL MATCHING AND SELECTION. Where the Specifications require matching an established sample or call for "as selected", the Owner's Representative's decision will be final on whether a proposed product matches satisfactorily.

B. STORAGE AND PROTECTION
1. GENERAL
   a) Contractor shall provide and maintain:
      1) Storage for materials and equipment to be installed in Project.
      2) Protection and security for stored materials and equipment, on and off site.
      3) Protection of existing on-site elements to remain.
      4) Protection of adjacent properties improvements
2. METHODS
   a) Store off grade and cover with impervious material all moisture or water vulnerable materials.
   b) Store finished products and equipment in an enclosed building, on or off site.
   c) Maintain integrity of shipping cartons until ready for installation.
   d) Provide separate storage for combustible and non-combustible products.
   e) Follow storage recommendations of product and equipment manufacturers.
   f) Other methods shall be subject to Owner's prior written approval.

3. The Contractor shall maintain an emergency phone number where a contact person can be notified at any time, Sundays and holidays included, of an emergency condition due to the work which requires immediate repair or protection.

C. SUBSTITUTIONS

1. See "SECTION 016000 – A. MATERIALS AND EQUIPMENT" for requirements pertaining to substitution of specified materials, products, equipment, etc.
2. Contractor may propose substitute materials, products, equipment, etc., after award of the Bid; however, such proposals are expected to result in a cost savings to the Owner and/or higher quality Work at no additional cost to the Owner.

D. WARRANTIES AND BONDS

1. GENERAL
   a) This Section specifies general administrative and procedural requirements for warranties and bonds required by the Contract Documents, including manufacturer's standard warranties on products and special warranties.
   b) Warranties for the Work and products and installations of each Contractor shall be one (1) year unless specified otherwise in the individual Sections of Divisions 02 through 35.
   c) Disclaimers and Limitations:
      1) Manufacturer's disclaimers and limitations on product warranties do not relieve the Contractor of the warranty on the Work that incorporates the products, nor does it relieve suppliers, manufacturers, and Contractors required to countersign special warranties with the Contractor.
      2) The responsibility of the Contractor in respect to the required warranties shall not be relieved or limited in any way by the failure of installed components, equipment, materials, etc., due to naturally occurring and/or re-occurring conditions at the site or area of the Work including, but not limited to:
         aa) ground and soil conditions, especially as related to frost heave;
         bb) high wind velocities (except those exceeding velocities normally used for calculating wind loading at the site of the Work);
         cc) rain and water damage (unless caused by winds exceeding normal design limits);
         dd) ice/snow loading on structures
         ee) and other naturally occurring or re-occurring site conditions
      3) The Contractor shall notify the Owner's Representative, prior to the award of the contract, of any part or component of the Work that is, in his opinion, not designed to accommodate the existing, naturally occurring, or re-occurring conditions of the site, and whether or not a change in the proposed methods of construction, types of equipment, etc., will affect the bid price.
         aa) Should the proposed change in construction methods, equipment type, etc., result in additional expense, the Owner reserves the right to request proposals from the other bidders and to make award the contract based on the bid amount which includes the proposed change.
2. WARRANTY REQUIREMENTS
   a) Related Damages and Losses: When correcting warranted Work that has failed, remove and replace other Work that has been damaged as a result of such failure or that must be removed and replaced to provide access for correction of warranted Work.
   b) Reinstatement of Warranty: When Work covered by a warranty has failed and been corrected by replacement or rebuilding, reinstate the warranty by written endorsement. The reinstated warranty shall be equal to the original warranty with an equitable adjustment for depreciation.

   c) Replacement cost: Upon determination that Work covered by a warranty has failed, replace or rebuild the Work to an acceptable condition complying with requirements of the Contract Documents. The Contractor is responsible for the cost of replacing or rebuilding defective Work regardless of whether the Owner has benefited from use of the Work through a portion of its anticipated useful service life.
   d) Owner's Recourse: Written warranties made to the Owner are in addition to implied warranties, and shall not limit the duties, obligations, rights and remedies otherwise available under the law, nor shall warranty periods be interpreted as limitations on time in which the Owner can enforce such other duties, obligations, rights or remedies.
      aa) Rejection of Warranties: The Owner reserves the rights to reject warranties and to limit selections to products with warranties not in conflict with requirements of the Contract Documents.
   e) The Owner reserves the right to refuse to accept Work for the Project where a special warranty, certification, or similar commitment is required on such Work or part of the Work, until evidence is presented that entities required to countersign such commitments are willing to do so.
   f) For specific warranty requirements related to landscape materials, refer to the applicable Section.
3. SUBMITTALS
   a) Submit written warranties to the Owner's Representative prior to the date certified for Substantial Completion. If the Owner's Representative's Certificate of Substantial Completion designates a commencement date for warranties other that the date of Substantial Completion for the Work, or a designated portion of the Work, submit written warranties upon request of the Owner's Representative.
      1) When a designated portion of the Work is completed and occupied or used by the Owner, by separate agreement with the Contractor during the construction period, submit properly executed warranties to the Owner's Representative within fifteen days of completion of that designated portion of the Work.
   b) Form of Submittal: At Final Completion, compile two copies of each required warranty and bond properly executed by the Contractor, or by the Contractor, Subcontractor, supplier, or manufacturer. Organize the warranty documents into an orderly sequence based on the table of contents of the Project Manual.
   c) Bind warranties and bonds in heavy-duty, commercial quality, durable 3-ring vinyl covered loose-leaf binders, thickness as necessary to accommodate contents, and sized to receive 8-1/2" by 11" paper.
   d) Provide heavy paper dividers with celluloid covered tabs for each separate warranty. Mark the tab to identify the product or installation. Provide a typed description of the product or installation, including the name of the product, and the name, address and telephone number of the installer.
   e) Identify each binder on the front and the spine with the typed or printed title "WARRANTIES AND BONDS", the project title or name, and the name of the Contractor.
   f) When operating and maintenance manuals are required for warranted construction, provide additional copies of each required warranty, as necessary, for inclusion in each required manual.

SECTION 017300 – EXECUTION

A. GEOTECHNICAL DATA

1. If the Owner has caused borings or other subsurface investigations to be made, the data or report pursuant to these investigations will be included in the Project Manual, as an Appendix, and labeled as such.
2. The Owner and Owner's Representative do not guarantee the accuracy or validity of the data, nor do they assume any responsibility for the Contractor's interpretation of the data.
3. The Contractor's may, at his option, perform additional subsurface investigation, however, it shall be at the Contractor's sole expense.

B. FIELD ENGINEERING

Provide such field engineering services as are required for proper completion of the Work including, but not limited to:

1. Establishing and maintaining lines and levels
2. Structural design of shores, forms, and similar items provided by the Contractor as part of his means and methods of construction.
3. Verify layout information shown on the Drawings, in relation to the property survey and existing benchmarks and control points. Preserve permanent reference points during construction.

C. COORDINATION OF TRADES AND SUB-CONTRACTORS

1. The Contractor shall be responsible for the proper fitting of all work and for the coordination of the operation of all trades, sub-contractors, or materials and men engaged upon the work. He shall be prepared to guarantee to each of his subcontractors the dimensions which may be required for fitting of their work to all surrounding work and shall do, or cause his agents to do, all cutting, fitting, adjusting and patching necessary to make the several parts of the work come together properly and fit the work to receive, or be received by that of other contractors.
2. When two or more prime contracts are being executed at one time in such manner that the work on one contract may interfere with the work of another, the Owner's Representative shall decide which contractor shall cease work and which shall continue, or whether the work on both contracts may progress at the same time and in what manner.
   a) The Contractor shall not cause any unnecessary hindrance or delay to any other contractors on the premises, and shall be responsible for all damages done to the work of other contractors caused by him or by his employees.

D. REFERENCE AND CONTROL POINTS PROVIDED BY OWNER

In addition to layout procedures provided by the Contractor for proper performance of the Contractor's responsibilities:

1. Locate and protect existing control points before starting work on the site.
2. Preserve permanent reference points during progress of the Work.
3. Do not change or relocate reference points or items of the Work without specific approval from the Owner's Representative.
4. Promptly advise the Owner's Representative when a reference point is lost or destroyed, or requires relocation because of other changes in the Work.
5. Upon direction of the Owner's Representative, require the field engineer to replace reference stakes or markers.
6. Locate such replacement according to the original survey control.

E. REFERENCE AND CONTROL POINTS PROVIDED BY THE CONTRACTOR

1. If not provided by the Owner (and defined as the responsibility of the Owner in the Contract Documents) establish sufficient general reference points in the form of permanent bench marks, grade stakes or other markers as will enable the Contractor to proceed with the Work.
2. The Contractor may lay out his own work, or cause the Work to be laid out by a qualified party such as a Registered Land Surveyor or a Professional Engineer, as necessary.
3. The Contractor shall establish and be responsible for all lines, elevations and measurements of the structure utilities, installations, and other Work executed by him under the contract.
   a) Exercise proper precautions to verify the figures and dimensions shown on the drawings before laying out the work; be responsible for any error resulting from failure to exercise such precaution.

SECTION 017329 - CUTTING AND PATCHING

A. CHASES AND OPENINGS

1. The Contractor is responsible for the provision and/or coordination of all chases, openings and recesses required by work of his own forces, subcontractors or separate contractors.
   a) Each subcontractor or separate contractor shall be responsible for furnishing advance information to the General Contractor as to exact dimensions and locations of such chases and openings, and shall provide and set in place all necessary sleeves, inserts and forms.
   b) Openings shall be accurately located, neatly cut, and no larger than necessary. Provide all rebuilding, patching, refinishing and painting required to restore the construction to original condition.
2. Provide shoring, bracing, and support as required to maintain structural integrity of the project.
3. Provide protection from cutting and patching operations as required for other portions of the project; protect the Work and existing improvements in proximity to the cutting and patching operations from the elements.

SECTION 017419 – CONSTRUCTION WASTE MANAGEMENT & DISPOSAL

A. PERIODIC CLEANING

1. Each Contractor shall clean up after his own work as needed and/or ensure that sub-contractors clean up after their work and remove accumulations of waste, debris, and rubbish caused by construction operations.
   a) Remove all waste, rubbish and debris on a daily basis (if needed), as they accumulate, and after completion of the Work.

B. PROJECT COMPLETION

1. On completion of the project, the entire job shall be cleaned up and left in perfect condition, including adjacent areas.
   a) Marred surfaces shall be patched or repaired and touched up to match adjoining surfaces.
   b) All rubbish shall be removed from the site before acceptance.
   c) New surfaces and/or exposed elements of the Work shall be protected from stain and marring. These surfaces shall be cleaned to the satisfaction of the Owner's Representative or replaced if said stains or mars are unable to be completely removed

C. GOVERNMENTAL REGULATIONS

1. Conduct cleaning and disposal operations in compliance with Federal, State and local ordinances and anti-pollution laws and regulations.

SECTION 017700 - PROJECT CLOSEOUT

A. GENERAL

Work includes:

1. Substantial Completion.
2. Final Completion
3. Closeout submittals.
4. Instruction

B. SUBSTANTIAL COMPLETION

1. Prepare and submit the list ("punch-list") required by the first sentence of Paragraph 9.8.2 of the General Conditions.
   a) Within a reasonable time after receipt of the list the Owner's Representative will inspect to determine status of completion. Should the Owner's Representative determine that the Work is not Substantially Complete:
      1) The Owner's Representative will so notify the Contractor, in writing, giving the reasons therefore.
      2) Remedy the deficiencies and notify the Owner's Representative when ready for reinspection.
      3) The Owner's Representative will reinspect the Work.
   b) When the Owner's Representative concurs that the Work is Substantially Complete:
      1) The Owner's Representative will prepare a "Certificate of Substantial Completion" on AIA form G704, accompanied by the Contractor's list of items to be completed or corrected, as verified and approved by the Owner's Representative.
      2) The Owner's Representative will submit the Certificate to the Owner and to the Contractor for their written acceptance of the responsibilities assigned to them in the Certificate.

C. FINAL COMPLETION

1. Prepare and submit the notice required by the first sentence of Paragraph 9.10.1 of the General Conditions.
   a) Verify that the Work is complete including, but not necessarily limited to, the items mentioned in Paragraph 9.8.2 of the General Conditions. Certify that:
      1) the Contract Documents have been reviewed;
      2) the Work has been inspected for compliance with the Contract Documents;
      3) the Work has been completed in accordance with the Contract Documents;
      4) equipment and systems have been tested as required, and are operational;
      5) the Work is completed and ready for final inspection.
   b) The Owner's Representative will make a final inspection to verify status of completion and if all "punch-list" items have been completed, and upon receipt of the Contractor's Final Application for Payment, issue a Certificate of Final Completion. Should the Owner's Representative determine that the Work is incomplete or defective:
      1) The Owner's Representative will so notify the Contractor, in writing, listing the incomplete or defective work.
      2) Remedy the deficiencies promptly, and notify the Owner's Representative when ready for reinspection.
   c) FINAL APPLICATION FOR PAYMENT
      1) Submit a final Application for Payment to the Owner's Representative, showing all adjustments to the Contract Sum.
      2) If needed, the Owner's Representative will prepare a final Change Order showing adjustments to the Contract Sum which were not made previously by Change Orders.
      3) Include final waivers of lien from the Contractor, sub-contractors, and major suppliers.
      4) Final payment will not be released until all close-out submittals have been made, final cleaning has been performed, and required instruction(s) to Owner's personnel have been accomplished.

D. CLOSEOUT SUBMITTALS

1. When the Owner's Representative determines that the Work is acceptable under the Contract Documents, he will request the Contractor to make closeout submittals. Closeout submittals include, but are not necessarily limited to:
   a) Project record documents described in "Section 017839".
   b) Operation and maintenance manuals/data as described in "Section 017823".
   c) Warranties and bonds as described in "Section 016000".
   d) Keys and keying schedule;
   e) Spare parts and materials extra stock;
   f) Evidence of compliance with requirements of governmental agencies having jurisdiction including, but not necessarily limited to:
      1) Certificates of Inspection, as required
      2) Certificate(s) of Occupancy
   g) Certificates of Insurance for products and completed operations;
   h) Evidence of payment and release of liens.
      1) Consent of Surety to Final Payment
      2) Contractor's Final Waiver of Lien
      3) Separate releases or Waivers of Lien for sub-contractors, suppliers and others with lien rights against the Owner, together with a list of those parties.
   i) List of subcontractors, service organizations, and principal vendors, including names, addresses, and telephone numbers where they can be reached for emergency service at all times including nights, weekends, and holidays.

SECTION 017823 - OPERATING/MAINTENANCE MANUALS & INSTRUCTION

A. GENERAL

1. Compile operating/product data and related information appropriate for Owner's maintenance and operation of products and equipment provided under the Contract.
2. Instruct Owner's personnel in operation and maintenance of products, equipment and systems.
3. OPERATIONS AND MAINTENANCE DATA REQUIRED:
    a) Operating and maintenance manuals are required for each area of Work which is listed below, if that area of Work is included within the scope of Work of the project:
        1) HVAC
        2) Plumbing – including water supply, sewage and waste disposal
        3) Electrical
        4) Landscape irrigation system
        5) Fire sprinkler system
        6) Communications equipment and systems
        7) Materials and finishes (see _____ below)
        8) _____
        9) _____

B. OPERATIONS/MAINTENANCE MANUALS - FORM OF SUBMITTAL
1. Prepare operating and maintenance manuals in the form of an instructional manual, utilizing heavy-duty, durable 3-ring vinyl covered loose-leaf binders, for use by the Owner's operating personnel. Organize into suitable sets of manageable size. Where possible, assemble instructions for similar equipment into a single binder. Provide when drawings or diagrams are required as part of the manual.
2. Provide sturdy manila or kraft envelope, accordion type file folder, or cardboard file boxes, properly labeled, of sufficient size to contain all submittals.
3. Submit one copy of data in final form at least fifteen days before final inspection. This copy will be returned within fifteen days after final inspection, with comments. After final inspection make corrections or modifications to comply with the Owner's Representative's comments and submit three copies of each approved manual to the Owner's Representative
4. WARRANTIES, BONDS AND SERVICE CONTRACTS
    a) Provide a copy of each warranty, bond or service contract in the appropriate manual for the information of the Owner's operating personnel. Provide written data outlining procedures to be followed in the event of product failure. List circumstances and conditions that would affect validity of the warranty or bond. Provide list for each product containing name, address, and phone number of:
        1) Contractor.
        2) Subcontractor.
        3) Maintenance contractor, as appropriate.
        4) Local supply source for parts and replacement.
    b) Identify area of responsibility of each contractor.

C. MANUAL FOR MATERIALS AND FINISHES
1. Submit two (2) copies of complete manual in final form.
2. Refer to individual Specification Sections for additional requirements on care and maintenance of materials and finishes.
3. Content for products, applied materials and finishes:
    a) Manufacturer's data, giving full information on products.
        1) Catalog number, size, composition.
        2) Color and texture designations.
        3) Information for re-ordering special-manufactured products.
4. Instructions for care and maintenance.
    a) Manufacturer's recommendations for types of cleaning agents and methods.
    b) Cautions against cleaning agents and methods detrimental to product.
    c) Recommended cleaning and maintenance schedule.
5. Moisture-Protection and Weather-Exposed Products: Provide complete manufacturer's data with instructions on inspection, maintenance and repair of products exposed to the weather or designed for moisture-protection purposes.
6. Manufacturer's Data: Provide manufacturer's data giving detailed information, including the following, as applicable:
    a) Applicable standards.
    b) Chemical composition.
    c) Installation details.
    d) Inspection procedures.
    e) Maintenance information.
    f) Repair procedures.

D. INSTRUCTION
1. Instruct the Owner's personnel in proper operation and maintenance of systems, equipment, and similar items which were provided as part of the Work including, but not limited to;
    a) Mechanical
    b) Water supply
    c) Electrical service/distribution and lighting
    d) Other items or systems as required in individual sections of the Technical Specifications
2. Instructions for the Owner's Personnel: For instruction of the Owner's operating and maintenance personnel, use experienced instructors thoroughly trained and experienced in the operation and maintenance of the equipment or system involved.

SECTION 017839 - PROJECT RECORD DOCUMENTS (AS-BUILTS)

A. DOCUMENTS REQUIRED AT SITE

1. The Contractor shall maintain at the job site one copy of all Drawings, Specifications, Addenda, approved Shop Drawings, Change Orders, and other Contract modifications.
   a) Each of these project record documents shall be clearly marked "**Project Record Copy**"
   b) Shall be maintained in good condition
   c) shall be available at all times for inspection by the Park District, and shall not be used for construction purposes.

B. Project-record drawings shall be marked up to show significant changes made during construction progress, referenced to visible and accessible features of the structures. Project-record drawings shall be kept current and no work shall be concealed until required information has been recorded.

C. Record-documents shall be submitted in satisfactory condition to the Park District at the completion of the project. **FINAL COMPLETION OF THE PROJECT WILL NOT BE ATTAINED, AND FINAL PAYMENT WILL BE WITHHELD, UNTIL PROJECT "AS-BUILTS" ARE SUBMITTED TO AND APPROVED BY THE OWNER'S REPRESENTATIVE.**

END OF GENERAL REQUIREMENTS

DOCUMENT 000107 - SEALS PAGE

1.1 DESIGN PROFESSIONALS OF RECORD

A. Architect:
   1. Benjamin L. Kauffman, apaceDesign.
   2. 001.020403.
   3. Responsible for Divisions 02-49 Sections except where indicated as prepared by other design professionals of record.

B. Asbestos Designer:
   1. Brad McKee, McKee Environmental Inc.
   2. #CP 7664 (CIH); #00194 (LIH); IDPH #100-1758
   3. Responsible for all Asbestos Abatement drawings and sections.

C. Structural Engineer:
   1. Tom DeJarld, Hanson Inc.
   2. 81.4730.
   3. Responsible for “S” Sheets and Sections: 033000,042200,051200,053100, 054000, 055000, 061600.

D. Fire-Protection Engineer:
   1. Mark Cordes, apaceDesign.
   2. 062.039301.
   3. Responsible for “FP” Sheets and Division: 21

E. Plumbing Engineer:
   1. Mark Cordes, apaceDesign.
   2. 062.039301.
   3. Responsible for “P” Sheets and Division: 22

F. HVAC Engineer:
   1. Mark Cordes, apaceDesign.
   2. 062.039301.
   3. Responsible for “H” Sheets and Division: 23

G. Electrical Engineer:
   1. Brian Keith, Keith Engineering Design Inc.
   2. 062.050306.
   3. Responsible for “E” Sheets and Divisions: 26, 27, and 28

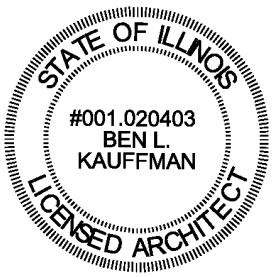

EXPIRES 11.30.14

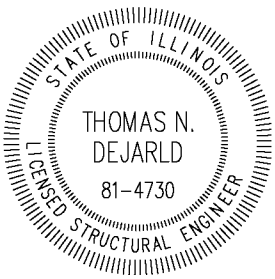

EXPIRES 11.30.14

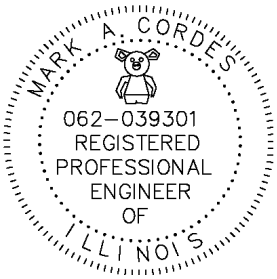

EXPIRES 11.30.15

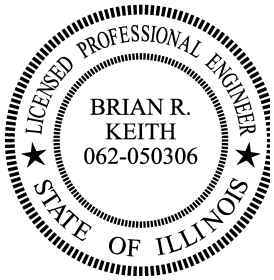

EXPIRES 11.30.15

END OF DOCUMENT 000107

DOCUMENT 002513 - PREBID MEETINGS

1.1 PREBID MEETING

A. Owner and Architect will conduct a Prebid meeting as indicated below:
   1. Meeting Date: April 15, 2014.
   2. Meeting Time: 10:00 a.m., local time.
   3. Location: Glen Oak Park Pavilion, 2218 N. Prospect Road, Peoria, IL 61603.

B. Attendance:
   1. Prime Bidders: Attendance at Prebid meeting is recommended.
   2. Subcontractors: Attendance at Prebid meeting is recommended.
   3. Notice: Bids will only be accepted from prime bidders represented on Prebid Meeting sign-in sheet.

C. Bidder Questions: Submit written questions to be addressed at Prebid meeting minimum of two business days prior to meeting.

D. Agenda: Prebid meeting agenda will include review of topics that may affect proper preparation and submittal of bids, including the following:
   1. Procurement and Contracting Requirements:
      a. Advertisement for Bids.
      b. Instructions to Bidders.
      c. Bidder Qualifications.
      d. Bonding.
      e. Insurance.
      f. Bid Security.
      g. Bid Form and Attachments.
      h. Bid Submittal Requirements.
      i. Bid Submittal Checklist.
      j. Notice of Award.
   2. Communication during Bidding Period:
      a. Obtaining documents.
      b. Access to Project Web site.
      c. Bidder's Requests for Information.
      d. Bidder's Substitution Request/Prior Approval Request.
      e. Addenda.
   3. Contracting Requirements:
      a. Agreement.
      b. The General Conditions.
      c. The Supplementary Conditions.
      d. Other Owner requirements.
   4. Construction Documents:
      a. Scopes of Work.
      b. Temporary Facilities.
      c. Use of Site.
      d. Work Restrictions.
      e. Alternates, Allowances, and Unit Prices.
      f. Substitutions following award.
   5. Separate Contracts:
      a. Work by Owner.
      b. Work of Other Contracts.
   6. Schedule:

a. Project Schedule.
b. Contract Time.
c. Liquidated Damages.
d. Other Bidder Questions.

7. Site/facility visit or walkthrough.
8. Post-Meeting Addendum.

END OF DOCUMENT 002513

SECTION 011000 - SUMMARY

PART 1 - GENERAL

1.1 SUMMARY

A. Section Includes:
1. Project information.
2. Work covered by Contract Documents.
3. Phased construction.
4. Work under separate contracts.
5. Access to site.
6. Coordination with occupants.
7. Work restrictions.
8. Specification and drawing conventions.
9. Miscellaneous provisions.

B. Related Requirements:
1. Section 015000 "Temporary Facilities and Controls" for limitations and procedures governing temporary use of Owner's facilities.

1.2 PROJECT INFORMATION

A. Project Identification: Peoria Playhouse Childrens Museum, 24905.02.
1. Project Location: Glen Oak Park, 2218 N. Prospect Road, Peoria, IL 61603.

B. Owner: Peoria Park District, 1125 W. Lake Ave., Peoria, IL 61614.
1. Owner's Representative: Becky Fredrickson, 309-686-3386.

C. Architect: apaceDesign Architects + Engineers, 2112 E. War Memorial Drive, Peoria, IL 61614, 309-685-4722.

1.3 WORK COVERED BY CONTRACT DOCUMENTS

A. The Work of Project is defined by the Contract Documents and consists of the following:
1. Project consists of a complete interior/partial exterior renovation of the Glen Oak Park Pavilion into a Childrens Museum. Work scope will include asbestos abatement, general trades, mechanical, fire protection, plumbing, electrical, etc.

B. Type of Contract.
1. Project will be constructed under a single prime contract.

1.4 WORK UNDER SEPARATE CONTRACTS

A. General: Cooperate fully with separate contractors so work on those contracts may be carried out smoothly, without interfering with or delaying work under this Contract or other contracts. Coordinate the Work of this Contract with work performed under separate contracts.

B. Concurrent Work: Owner has awarded or will award separate contract(s) for the following construction operations at Project site. Those operations will be conducted simultaneously with work under this Contract.
   1. Exhibit construction coordination
   2. Information Technology contract
   3. Security alarm contract
   4. Noise attenuation contract

C. Subsequent Work: Owner has awarded or will award separate contract(s) for the following additional work to be performed at site following Substantial Completion. Completion of that work will depend on successful completion of preparatory work under this Contract.
   1. Exhibit installation
   2. Information Technology contract
   3. Security alarm contract
   4. Noise attenuation contract

1.5 ACCESS TO SITE

A. General: Contractor shall have full use of Project site for construction operations during construction period. Contractor's use of Project site is limited only by Owner's right to perform work or to retain other contractors on portions of Project.

B. Use of Site: Limit use of Project site to work in areas indicated. Do not disturb portions of Project site beyond areas in which the Work is indicated.
   1. Limits: Confine construction operations to immediate building site and adjacent parking lot.
   2. Limits: Limit site disturbance, including earthwork and clearing of vegetation, to 40 feet beyond building perimeter; 10 feet beyond surface walkways, patios, surface parking, and utilities less than 12 inches in diameter; 15 feet beyond primary roadway curbs and main utility branch trenches; and 25 feet beyond constructed areas with permeable surfaces (such as pervious paving areas, stormwater detention facilities, and playing fields) that require additional staging areas in order to limit compaction in the constructed area.
   3. Driveways, Walkways and Entrances: Keep driveways and entrances serving premises clear and available to Owner, Owner's employees, and emergency vehicles at all times. Do not use these areas for parking or storage of materials, unless Owner’s approves areas in writing.
      a. Schedule deliveries to minimize use of driveways and entrances by construction operations.
      b. Schedule deliveries to minimize space and time requirements for storage of materials and equipment on-site.

C. Condition of Existing Building: Maintain portions of existing building affected by construction operations in a weathertight condition throughout construction period. Repair damage caused by construction operations.

1.6 COORDINATION WITH OCCUPANTS

A. Full Owner Occupancy: Owner will occupy site and existing, adjacent building(s) during entire construction period. Cooperate with Owner during construction operations to minimize conflicts and facilitate Owner usage. Perform the Work so as not to interfere with Owner's day-to-day operations. Maintain existing exits unless otherwise indicated.
   1. Maintain access to existing walkways, corridors, and other adjacent occupied or used facilities. Do not close or obstruct walkways, corridors, or other occupied or used facilities without written permission from Owner and approval of authorities having jurisdiction.
   2. Notify Owner not less than 72 hours in advance of activities that will affect Owner's operations.

B. Owner Limited Occupancy of Completed Areas of Construction: Owner reserves the right to occupy and to place and install equipment in completed portions of the Work, prior to Substantial Completion of the Work, provided such occupancy does not interfere with completion of the Work. Such placement of equipment and limited occupancy shall not constitute acceptance of the total Work.
   1. Architect will prepare a Certificate of Substantial Completion for each specific portion of the Work to be occupied prior to Owner acceptance of the completed Work.
   2. Obtain a Certificate of Occupancy from authorities having jurisdiction before limited Owner occupancy.
   3. Before limited Owner occupancy, mechanical and electrical systems shall be fully operational, and required tests and inspections shall be successfully completed. On occupancy, Owner will operate and maintain mechanical and electrical systems serving occupied portions of Work.
   4. On occupancy, Owner will assume responsibility for maintenance and custodial service for occupied portions of Work.

1.7 WORK RESTRICTIONS

A. Work Restrictions, General: Comply with restrictions on construction operations.
   1. Comply with limitations on use of public streets and with other requirements of authorities having jurisdiction.

B. On-Site Work Hours: Limit work in the existing building to normal business working hours of 7:00 a.m. to 5:00 p.m., Monday through Friday, unless otherwise indicated.

C. Existing Utility Interruptions: Do not interrupt utilities serving facilities occupied by Owner or others unless permitted under the following conditions and then only after providing temporary utility services according to requirements indicated:
   1. Notify Owner not less than two days in advance of proposed utility interruptions.
   2. Obtain Architect's written permission before proceeding with utility interruptions.

D. Noise, Vibration, and Odors: Coordinate operations that may result in high levels of noise and vibration, odors, or other disruption to Owner occupancy with Owner.
   1. Notify Owner not less than two days in advance of proposed disruptive operations.
   2. Obtain Owner's written permission before proceeding with disruptive operations.

E. Nonsmoking Building: Smoking is not permitted within the building or within 25 feet of entrances, operable windows, or outdoor-air intakes.

F. Controlled Substances: Use of tobacco products and other controlled substances on Project site is not permitted.

1.8 SPECIFICATION AND DRAWING CONVENTIONS

A. Specification Content: The Specifications use certain conventions for the style of language and the intended meaning of certain terms, words, and phrases when used in particular situations. These conventions are as follows:
   1. Imperative mood and streamlined language are generally used in the Specifications. The words "shall," "shall be," or "shall comply with," depending on the context, are implied where a colon (:) is used within a sentence or phrase.
   2. Specification requirements are to be performed by Contractor unless specifically stated otherwise.

B. Division 01 General Requirements: Requirements of Sections in Division 01 apply to the Work of all Sections in the Specifications.

C. Drawing Coordination: Requirements for materials and products identified on Drawings are described in detail in the Specifications. One or more of the following are used on Drawings to identify materials and products:
   1. Terminology: Materials and products are identified by the typical generic terms used in the individual Specifications Sections.
   2. Abbreviations: Materials and products are identified by abbreviations published as part of the U.S. National CAD Standard and scheduled on Drawings.
   3. Keynoting: Materials and products are identified by reference keynotes referencing Specification Section numbers found in this Project Manual.

PART 2 - PRODUCTS (Not Used)

PART 3 - EXECUTION (Not Used)

END OF SECTION 011000

SECTION 012200 - UNIT PRICES

PART 1 - GENERAL

1.1 SUMMARY

A. Section includes administrative and procedural requirements for unit prices.

B. Related Requirements:

1. Section 012600 "Contract Modification Procedures" for procedures for submitting and handling Change Orders.

1.2 DEFINITIONS

A. Unit price is [an amount incorporated in the Agreement, applicable during the duration of the Work as] a price per unit of measurement for materials, equipment, or services, or a portion of the Work, added to or deducted from the Contract Sum by appropriate modification, if the scope of Work or estimated quantities of Work required by the Contract Documents are increased or decreased.

1.3 PROCEDURES

A. Unit prices include all necessary material, plus cost for delivery, installation, insurance, overhead, and profit.

B. Measurement and Payment: See individual Specification Sections for work that requires establishment of unit prices. Methods of measurement and payment for unit prices are specified in those Sections.

C. Owner reserves the right to reject Contractor's measurement of work-in-place that involves use of established unit prices and to have this work measured, at Owner's expense, by an independent surveyor acceptable to Contractor.

D. List of Unit Prices: A schedule of unit prices is included in Part 3. Specification Sections referenced in the schedule contain requirements for materials described under each unit price.

PART 2 - PRODUCTS (Not Used)

PART 3 - EXECUTION

3.1 SCHEDULE OF UNIT PRICES

A. Unit Price No. 1

1. Description: Install Plywood 4’x8’ panel for blocking at stud wall.
2. Unit of Measurement: 4’x8’ panel.

B. Unit Price No. 2
   1. Description: Install 2x4 wood blocking at stud wall.
   2. Unit of Measurement: Each 16″L. 2x4

C. Unit Price No. 3
   1. Description: Demo Plaster and Lath wall/ceiling construction
   2. Unit of Measurement: per s.f.

D. Unit Price No. 4
   1. Description: Repair plaster and lath wall construction
   2. Unit of Measurement: per s.f.

E. Unit Price No. 5
   1. Description: Repair plaster and lath ceiling construction
   2. Unit of Measurement: per s.f.

F. Unit Price No. 6
   1. Description: Sister a 2x8 Wood joist ~20′ long to an existing porch ceiling joist/rafter. See detail 3/S401.
   2. Unit of Measurement: per each 2x8 installation

G. Unit Price No. 7
   1. Description: Sister a 1¾″x14″ LVL ~20′long to an existing floor joist. See detail 3/S401.
   2. Unit of Measurement: per each LVL installation

H. Unit Price No. 8
   1. Description: Sister a 2x10 wood joist ~20′ long to an existing floor/ceiling joist. See Detail 3/S401.
   2. Unit of Measurement: per each 2x10 installation

I. Unit Price No. 9
   1. Description: Sister a 2x12 wood joist ~20′ long to an existing floor/ceiling joist. See Detail 3/S401.
   2. Unit of Measurement: per each 2x12 installation

J. Unit Price No. 10
   1. Description: Sister a 1 ¾″x9 ½″ LVL ~20′ long to an existing floor/ceiling joist. See Detail 3/S401.
   2. Unit of Measurement: per each LVL installation

END OF SECTION 012200

SECTION 012300 - ALTERNATES

PART 1 - GENERAL

1.1 SUMMARY

A. Section includes administrative and procedural requirements for alternates.

1.2 DEFINITIONS

A. Alternate: An amount proposed by bidders and stated on the Bid Form for certain work defined in the bidding requirements that may be added to or deducted from the base bid amount if Owner decides to accept a corresponding change either in the amount of construction to be completed or in the products, materials, equipment, systems, or installation methods described in the Contract Documents.

1. Alternates described in this Section are part of the Work only if enumerated in the Agreement.
2. The cost or credit for each alternate is the net addition to or deduction from the Contract Sum to incorporate alternate into the Work. No other adjustments are made to the Contract Sum.

1.3 PROCEDURES

A. Coordination: Revise or adjust affected adjacent work as necessary to completely integrate work of the alternate into Project.

1. Include as part of each alternate, miscellaneous devices, accessory objects, and similar items incidental to or required for a complete installation whether or not indicated as part of alternate.

B. Notification: Immediately following award of the Contract, notify each party involved, in writing, of the status of each alternate. Indicate if alternates have been accepted, rejected, or deferred for later consideration. Include a complete description of negotiated revisions to alternates.

C. Execute accepted alternates under the same conditions as other work of the Contract.

D. Schedule: A schedule of alternates is included at the end of this Section. Specification Sections referenced in schedule contain requirements for materials necessary to achieve the work described under each alternate.

PART 2 - PRODUCTS (Not Used)

PART 3 - EXECUTION

3.1 SCHEDULE OF ALTERNATES

A. Add Alternate No. 1: Sand Porch Exhibit.

1. Alternate: The addition of the sand porch exhibit which includes floor structure and framing, aluminum storefront framing and glazing and entrances, floor/wall/ceiling finishes, HVAC systems, plumbing systems, fire protection systems, and all electrical systems regarding this area. See drawings and specifications for further detail.

B. Add Alternate No. 2: Additional Insulation
1. Alternate: The addition of insulation in the porch ceiling and existing exterior wall construction. See Sheet A107 for locations.

C. Alternate Bid No. 3: Exhibit Lighting (informational bid item)
1. Alternate: This cost shall be incurred in the base bid, but listed under this alternate as an informational item only. The exhibit lighting would include all fixtures and suspension/hanging apparatus. These costs shall include labor and material. See electrical drawings and exhibit lighting drawings.

D. Add Alternate Bid No. 4: Exterior Accessible Ramp
1. Alternate: The addition of the exterior concrete ramp, railings and sidewalk as noted in the drawings. This includes demolition of the existing wood ramp in its entirety.

E. Alternate Bid No. 5: Ductwork Alternate
1. Alternate: Insulated rectangular supply and return duct located in attic spaces shall be constructed of insulation board as specified in lieu of sheet metal and fiberglass blanket specified.

F. Alternate Bid No. 6: Asbestos Abatement (Informational Bid Item)
1. Alternate: The cost for all asbestos abatement as called out in the drawings and specifications.

END OF SECTION 012300

SECTION 012500 - SUBSTITUTION PROCEDURES

PART 1 - GENERAL

1.1 SUMMARY

A. Section includes administrative and procedural requirements for substitutions.

B. Related Requirements:
   1. Section 016000 "Product Requirements" for requirements for submitting comparable product submittals for products by listed manufacturers.

1.2 DEFINITIONS

A. Substitutions: Changes in products, materials, equipment, and methods of construction from those required by the Contract Documents and proposed by Contractor.

1.3 ACTION SUBMITTALS

A. Substitution Requests: Submit three copies of each request for consideration. Identify product or fabrication or installation method to be replaced. Include Specification Section number and title and Drawing numbers and titles.
   1. Substitution Request Form: Use CSI Form 13.1A.
   2. Documentation: Show compliance with requirements for substitutions and the following, as applicable:
      a. Statement indicating why specified product or fabrication or installation cannot be provided, if applicable.
      b. Coordination information, including a list of changes or revisions needed to other parts of the Work and to construction performed by Owner and separate contractors, that will be necessary to accommodate proposed substitution.
      c. Detailed comparison of significant qualities of proposed substitution with those of the Work specified. Include annotated copy of applicable Specification Section. Significant qualities may include attributes such as performance, weight, size, durability, visual effect, sustainable design characteristics, warranties, and specific features and requirements indicated. Indicate deviations, if any, from the Work specified.
      d. Product Data, including drawings and descriptions of products and fabrication and installation procedures.
      e. Samples, where applicable or requested.
      f. Certificates and qualification data, where applicable or requested.
      g. List of similar installations for completed projects with project names and addresses and names and addresses of architects and owners.
      h. Material test reports from a qualified testing agency indicating and interpreting test results for compliance with requirements indicated.

i. Research reports evidencing compliance with building code in effect for Project, from ICC-ES.
j. Detailed comparison of Contractor's construction schedule using proposed substitution with products specified for the Work, including effect on the overall Contract Time. If specified product or method of construction cannot be provided within the Contract Time, include letter from manufacturer, on manufacturer's letterhead, stating date of receipt of purchase order, lack of availability, or delays in delivery.
k. Cost information, including a proposal of change, if any, in the Contract Sum.
l. Contractor's certification that proposed substitution complies with requirements in the Contract Documents except as indicated in substitution request, is compatible with related materials, and is appropriate for applications indicated.
m. Contractor's waiver of rights to additional payment or time that may subsequently become necessary because of failure of proposed substitution to produce indicated results.

3. Architect's Action: If necessary, Architect will request additional information or documentation for evaluation within seven days of receipt of a request for substitution. Architect will notify Contractor of acceptance or rejection of proposed substitution within 15 days of receipt of request, or seven days of receipt of additional information or documentation, whichever is later.
   a. Forms of Acceptance: Change Order, Construction Change Directive, or Architect's Supplemental Instructions for minor changes in the Work.
   b. Use product specified if Architect does not issue a decision on use of a proposed substitution within time allocated.

1.4 QUALITY ASSURANCE

A. Compatibility of Substitutions: Investigate and document compatibility of proposed substitution with related products and materials. Engage a qualified testing agency to perform compatibility tests recommended by manufacturers.

PART 2 - PRODUCTS

2.1 SUBSTITUTIONS

A. Substitutions for Cause: Submit requests for substitution immediately on discovery of need for change, but not later than 15 days prior to time required for preparation and review of related submittals.
   1. Conditions: Architect will consider Contractor's request for substitution when the following conditions are satisfied:
      a. Requested substitution is consistent with the Contract Documents and will produce indicated results.
      b. Requested substitution will not adversely affect Contractor's construction schedule.
      c. Requested substitution has received necessary approvals of authorities having jurisdiction.

d. Requested substitution is compatible with other portions of the Work.
e. Requested substitution has been coordinated with other portions of the Work.
f. Requested substitution provides specified warranty.
g. If requested substitution involves more than one contractor, requested substitution has been coordinated with other portions of the Work, is uniform and consistent, is compatible with other products, and is acceptable to all contractors involved.

B. Substitutions for Convenience: Not allowed.

PART 3 - EXECUTION (Not Used)

END OF SECTION 012500

SECTION 012600 - CONTRACT MODIFICATION PROCEDURES

PART 1 - GENERAL

1.1 SUMMARY

A. Section includes administrative and procedural requirements for handling and processing Contract modifications.

1.2 MINOR CHANGES IN THE WORK

A. Architect will issue supplemental instructions authorizing minor changes in the Work, not involving adjustment to the Contract Sum or the Contract Time, on AIA Document G710, "Architect's Supplemental Instructions".

1.3 PROPOSAL REQUESTS

A. Owner-Initiated Proposal Requests: Architect will issue a detailed description of proposed changes in the Work that may require adjustment to the Contract Sum or the Contract Time. If necessary, the description will include supplemental or revised Drawings and Specifications.
   1. Work Change Proposal Requests issued by Architect are not instructions either to stop work in progress or to execute the proposed change.
   2. Within time specified in Proposal Request or 20 days, when not otherwise specified, after receipt of Proposal Request, submit a quotation estimating cost adjustments to the Contract Sum and the Contract Time necessary to execute the change.
      a. Include a list of quantities of products required or eliminated and unit costs, with total amount of purchases and credits to be made. If requested, furnish survey data to substantiate quantities.
      b. Indicate applicable taxes, delivery charges, equipment rental, and amounts of trade discounts.
      c. Include costs of labor and supervision directly attributable to the change.
      d. Include an updated Contractor's construction schedule that indicates the effect of the change, including, but not limited to, changes in activity duration, start and finish times, and activity relationship. Use available total float before requesting an extension of the Contract Time.
      e. Quotation Form: Use CSI Form 13.6D, "Proposal Worksheet Summary," and Form 13.6C, "Proposal Worksheet Detail".

B. Contractor-Initiated Work Change Proposals: If latent or changed conditions require modifications to the Contract, Contractor may initiate a claim by submitting a request for a change to Architect.
   1. Include a statement outlining reasons for the change and the effect of the change on the Work. Provide a complete description of the proposed change. Indicate the effect of the proposed change on the Contract Sum and the Contract Time.
   2. Include a list of quantities of products required or eliminated and unit costs, with total amount of purchases and credits to be

made. If requested, furnish survey data to substantiate quantities.

3. Indicate applicable taxes, delivery charges, equipment rental, and amounts of trade discounts.
4. Include costs of labor and supervision directly attributable to the change.
5. Include an updated Contractor's construction schedule that indicates the effect of the change, including, but not limited to, changes in activity duration, start and finish times, and activity relationship. Use available total float before requesting an extension of the Contract Time.
6. Comply with requirements in Section 012500 "Substitution Procedures" if the proposed change requires substitution of one product or system for product or system specified.
7. Work Change Proposal Request Form: Use CSI Form 13.6A, "Change Order Request (Proposal)," with attachments CSI Form 13.6D, "Proposal Worksheet Summary," and Form 13.6C, "Proposal Worksheet Detail".

1.4 ADMINISTRATIVE CHANGE ORDERS

A. Allowance Adjustment: See Section 012100 "Allowances" for administrative procedures for preparation of Change Order Proposal for adjusting the Contract Sum to reflect actual costs of allowances.

B. Unit-Price Adjustment: See Section 012200 "Unit Prices" for administrative procedures for preparation of Change Order Proposal for adjusting the Contract Sum to reflect measured scope of unit-price work.

1.5 CHANGE ORDER PROCEDURES

A. On Owner's approval of a Work Changes Proposal Request, Architect will issue a Change Order for signatures of Owner and Contractor on AIA Document G701.
   1. Change Orders are written documents describing changes in the Work, in the Contract Sum, in the Contract Time of Completion, or any combination thereof. Change Orders must be signed by both the Owner and the Architect/Owner's Representative <u>prior</u> to proceeding with the Work subject to the Change Order. **REQUESTS FOR "EXTRA'S" OR OTHER ADDITIONAL PAYMENTS OVER AND ABOVE THE CURRENT CONTRACT SUM WILL NOT BE CONSIDERED WITHOUT THE PRIOR, WRITTEN APPROVAL OF BOTH THE OWNER AND THE OWNER'S REPRESENTATIVE.**

      a. PROCESSING CHANGE ORDERS.
         1. Orders will be dated and will be numbered in sequence.
         2. The Change Order will describe the change or changes, or will refer to the Proposal Requests or Field Orders involved.
         3. The Owner's Representative will issue three copies of each Change Order to the Contractor.
         4. The Contractor promptly shall sign all three copies and return them to the Owner's Representative.

5. The Owner and Owner's Representative will retain two signed copies in their files, and will forward one signed copy to the Contractor.
6. Should the Contractor disagree with the stipulated change in Contract Sum or change in Contract Time of Completion, or both:
   i. The Contractor promptly shall return all three of the Change Orders, unsigned by him, to the Owner's Representative with a letter signed by the Contractor stating the reason or reasons for the Contractor's disagreement.
   ii. The Contractor's disagreement with the Change Order shall not in any way relieve the Contractor of his responsibility to proceed with the change as ordered and to seek settlement of the dispute under pertinent provisions of the Contract Documents.

1.6 CONSTRUCTION CHANGE DIRECTIVE

A. Construction Change Directive: Architect may issue a Construction Change Directive on AIA Document G714. Construction Change Directive instructs Contractor to proceed with a change in the Work, for subsequent inclusion in a Change Order.
   1. Construction Change Directive contains a complete description of change in the Work. It also designates method to be followed to determine change in the Contract Sum or the Contract Time.

B. Documentation: Maintain detailed records on a time and material basis of work required by the Construction Change Directive.
   1. After completion of change, submit an itemized account and supporting data necessary to substantiate cost and time adjustments to the Contract.

PART 2 - PRODUCTS (Not Used)

PART 3 - EXECUTION (Not Used)

END OF SECTION 012600

SECTION 012900 - PAYMENT PROCEDURES

PART 1 - GENERAL

1.1 SUMMARY

A. Section includes administrative and procedural requirements necessary to prepare and process Applications for Payment.

B. Related Requirements:
1. Section 012100 "Allowances" for procedural requirements governing the handling and processing of allowances.
2. Section 012200 "Unit Prices" for administrative requirements governing the use of unit prices.
3. Section 012600 "Contract Modification Procedures" for administrative procedures for handling changes to the Contract.
4. Section 013200 "Construction Progress Documentation" for administrative requirements governing the preparation and submittal of the Contractor's construction schedule.

1.2 SCHEDULE OF VALUES

A. Coordination: Coordinate preparation of the schedule of values with preparation of Contractor's construction schedule.
1. Coordinate line items in the schedule of values with other required administrative forms and schedules, including the following:
   a. Application for Payment forms with continuation sheets.
   b. Submittal schedule.
   c. Items required to be indicated as separate activities in Contractor's construction schedule.
2. Submit the schedule of values to Architect at earliest possible date but no later than seven days before the date scheduled for submittal of initial Applications for Payment.
3. Subschedules for Phased Work: Where the Work is separated into phases requiring separately phased payments, provide subschedules showing values coordinated with each phase of payment.

B. Format and Content: Use Project Manual table of contents as a guide to establish line items for the schedule of values. Provide at least one line item for each Specification Section.
1. Identification: Include the following Project identification on the schedule of values:
   a. Project name and location.
   b. Name of Architect.
   c. Architect's project number.
   d. Contractor's name and address.
   e. Date of submittal.
2. Arrange schedule of values consistent with format of AIA Document G703.
3. Provide a breakdown of the Contract Sum in enough detail to facilitate continued evaluation of Applications for Payment and progress reports. Coordinate with Project Manual table of contents. Provide multiple line items for principal subcontract amounts in excess of five percent of the Contract Sum.

a. Include separate line items under Contractor and principal subcontracts for Project closeout requirements in an amount totaling five percent of the Contract Sum and subcontract amount.

4. Round amounts to nearest whole dollar; total shall equal the Contract Sum.
5. Provide a separate line item in the schedule of values for each part of the Work where Applications for Payment may include materials or equipment purchased or fabricated and stored, but not yet installed.
6. Provide separate line items in the schedule of values for initial cost of materials, for each subsequent stage of completion, and for total installed value of that part of the Work.
7. Allowances: Provide a separate line item in the schedule of values for each allowance. Show line-item value of unit-cost allowances, as a product of the unit cost, multiplied by measured quantity. Use information indicated in the Contract Documents to determine quantities.
8. Each item in the schedule of values and Applications for Payment shall be complete. Include total cost and proportionate share of general overhead and profit for each item.
   a. Temporary facilities and other major cost items that are not direct cost of actual work-in-place may be shown either as separate line items in the schedule of values or distributed as general overhead expense, at Contractor's option.
9. Schedule Updating: Update and resubmit the schedule of values before the next Applications for Payment when Change Orders or Construction Change Directives result in a change in the Contract Sum.

1.3 APPLICATIONS FOR PAYMENT

A. Applications for Payment
   1. Progress payments will be made only if specifically called for in the Agreement. In all other cases, the Contractor may submit an Application for Payment (3 copies) upon Substantial Completion (95% of the Contract Sum), with the balance of the Contract Sum to be paid at Final Completion.
      a. Paragraph #52 of the Supplementary Conditions defines the documentation required for each payment request.
      b. Applications for payment shall be delivered to the Owner’s Project Manager at: Department of Planning, Design, and Construction, Peoria Park District, Bradley Park Equipment Services, 1314 N. Park Road, Peoria, IL 61604

B. Payment Application Times: The date for each progress payment is indicated in the Agreement between Owner and Contractor. The period of construction work covered by each Application for Payment is the period indicated in the Agreement.

C. Application for Payment Forms: Use AIA Document G702 and AIA Document G703 as form for Applications for Payment.

D. Application Preparation: Complete every entry on form. Notarize and execute by a person authorized to sign legal documents on behalf of

Contractor. Architect will return incomplete applications without action.

1. Entries shall match data on the schedule of values and Contractor's construction schedule. Use updated schedules if revisions were made.
2. Include amounts of Change Orders and Construction Change Directives issued before last day of construction period covered by application.

E. Transmittal: Submit three signed and notarized original copies of each Application for Payment to Architect by a method ensuring receipt within 24 hours. One copy shall include waivers of lien and similar attachments if required.

1. Transmit each copy with a transmittal form listing attachments and recording appropriate information about application.

F. Waivers of Mechanic's Lien: With each Application for Payment, submit waivers of mechanic's lien from entities lawfully entitled to file a mechanic's lien arising out of the Contract and related to the Work covered by the payment.

1. Submit partial waivers on each item for amount requested in previous application, after deduction for retainage, on each item.
2. When an application shows completion of an item, submit conditional final or full waivers.
3. Owner reserves the right to designate which entities involved in the Work must submit waivers.
4. Waiver Forms: Submit executed waivers of lien on forms acceptable to Owner.

G. Initial Application for Payment: Administrative actions and submittals that must precede or coincide with submittal of first Application for Payment include the following:

1. List of subcontractors.
2. Schedule of values.
3. Contractor's construction schedule (preliminary if not final).
4. Schedule of unit prices.
5. Submittal schedule (preliminary if not final).
6. List of Contractor's staff assignments.
7. List of Contractor's principal consultants.
8. Copies of building permits.
9. Copies of authorizations and licenses from authorities having jurisdiction for performance of the Work.
10. Initial progress report.
11. Report of preconstruction conference.
12. Certificates of insurance and insurance policies.

H. Application for Payment at Substantial Completion: After Architect issues the Certificate of Substantial Completion, submit an Application for Payment showing 100 percent completion for portion of the Work claimed as substantially complete.

1. Include documentation supporting claim that the Work is substantially complete and a statement showing an accounting of changes to the Contract Sum.

2. This application shall reflect Certificates of Partial Substantial Completion issued previously for Owner occupancy of designated portions of the Work.

I. Final Payment Application: After completing Project closeout requirements, submit final Application for Payment with releases and supporting documentation not previously submitted and accepted, including, but not limited, to the following:
   1. Evidence of completion of Project closeout requirements.
   2. Insurance certificates for products and completed operations where required and proof that taxes, fees, and similar obligations were paid.
   3. Updated final statement, accounting for final changes to the Contract Sum.
   4. AIA Document G706-1994, "Contractor's Affidavit of Payment of Debts and Claims."
   5. AIA Document G706A-1994, "Contractor's Affidavit of Release of Liens."
   6. AIA Document G707-1994, "Consent of Surety to Final Payment."
   7. Evidence that claims have been settled.
   8. Final meter readings for utilities, a measured record of stored fuel, and similar data as of date of Substantial Completion or when Owner took possession of and assumed responsibility for corresponding elements of the Work.
   9. Final liquidated damages settlement statement.

PART 2 - PRODUCTS (Not Used)

PART 3 - EXECUTION (Not Used)

END OF SECTION 012900

SECTION 013100 - PROJECT MANAGEMENT AND COORDINATION

PART 1 - GENERAL

1.1 SUMMARY

A. Section includes administrative provisions for coordinating construction operations on Project including, but not limited to, the following:
   1. Coordination drawings.
   2. Requests for Information (RFIs).
   3. Project Web site.
   4. Project meetings.

B. Related Requirements:
   1. Section 011200 "Multiple Contract Summary" for a description of the division of work among separate contracts and responsibility for coordination activities not in this Section.
   2. Section 017300 "Execution" for procedures for coordinating general installation and field-engineering services, including establishment of benchmarks and control points.

1.2 DEFINITIONS

A. RFI: Request from Owner, Architect, or Contractor seeking information required by or clarifications of the Contract Documents.

1.3 INFORMATIONAL SUBMITTALS

A. Subcontract List: Prepare a written summary identifying individuals or firms proposed for each portion of the Work, including those who are to furnish products or equipment fabricated to a special design. Use CSI Form 1.5A. Include the following information in tabular form:
   1. Name, address, and telephone number of entity performing subcontract or supplying products.
   2. Number and title of related Specification Section(s) covered by subcontract.
   3. Drawing number and detail references, as appropriate, covered by subcontract.

1.4 GENERAL COORDINATION PROCEDURES

A. Coordination: Coordinate construction operations included in different Sections of the Specifications to ensure efficient and orderly installation of each part of the Work. Coordinate construction operations, included in different Sections, that depend on each other for proper installation, connection, and operation.
   1. Schedule construction operations in sequence required to obtain the best results where installation of one part of the Work depends on installation of other components, before or after its own installation.
   2. Coordinate installation of different components to ensure maximum performance and accessibility for required maintenance, service, and repair.

3. Make adequate provisions to accommodate items scheduled for later installation.

B. Prepare memoranda for distribution to each party involved, outlining special procedures required for coordination. Include such items as required notices, reports, and list of attendees at meetings.
   1. Prepare similar memoranda for Owner and separate contractors if coordination of their Work is required.

C. Administrative Procedures: Coordinate scheduling and timing of required administrative procedures with other construction activities and activities of other contractors to avoid conflicts and to ensure orderly progress of the Work. Such administrative activities include, but are not limited to, the following:
   1. Preparation of Contractor's construction schedule.
   2. Preparation of the schedule of values.
   3. Installation and removal of temporary facilities and controls.
   4. Delivery and processing of submittals.
   5. Progress meetings.
   6. Preinstallation conferences.
   7. Project closeout activities.
   8. Startup and adjustment of systems.

1.5 COORDINATION DRAWINGS

A. Coordination Drawings, General: Prepare coordination drawings according to requirements in individual Sections, where installation is not completely shown on Shop Drawings, where limited space availability necessitates coordination, or if coordination is required to facilitate integration of products and materials fabricated or installed by more than one entity.
   1. Content: Project-specific information, drawn accurately to a scale large enough to indicate and resolve conflicts. Do not base coordination drawings on standard printed data. Include the following information, as applicable:
      a. Indicate functional and spatial relationships of components of architectural, structural, civil, mechanical, and electrical systems.
      b. Indicate dimensions shown on the Drawings. Specifically note dimensions that appear to be in conflict with submitted equipment and minimum clearance requirements. Provide alternate sketches to Architect indicating proposed resolution of such conflicts. Minor dimension changes and difficult installations will not be considered changes to the Contract.

B. Coordination Drawing Organization: Organize coordination drawings as follows:
   1. Floor Plans and Reflected Ceiling Plans: Show architectural and structural elements, and mechanical, plumbing, fire-protection, fire-alarm, and electrical Work. Show locations of visible ceiling-mounted devices relative to acoustical ceiling grid.
   2. Plenum Space: Indicate subframing for support of ceiling and wall systems, mechanical and electrical equipment, and related Work. Locate components within ceiling plenum to accommodate layout of light fixtures indicated on Drawings.

3. Mechanical Rooms: Provide coordination drawings for mechanical rooms showing plans and elevations of mechanical, plumbing, fire-protection, fire-alarm, and electrical equipment.
4. Structural Penetrations: Indicate penetrations and openings required for all disciplines.
5. Slab Edge and Embedded Items: Indicate slab edge locations and sizes and locations of embedded items for metal fabrications, sleeves, anchor bolts, bearing plates, angles, door floor closers, slab depressions for floor finishes, curbs and housekeeping pads, and similar items.
6. Review: Architect will review coordination drawings to confirm that the Work is being coordinated, but not for the details of the coordination, which are Contractor's responsibility.

1.6 REQUESTS FOR INFORMATION (RFIs)

A. General: Immediately on discovery of the need for additional information or interpretation of the Contract Documents, Contractor shall prepare and submit an RFI in the form specified.
1. Architect will return RFIs submitted to Architect by other entities controlled by Contractor with no response.
2. Coordinate and submit RFIs in a prompt manner so as to avoid delays in Contractor's work or work of subcontractors.

B. Content of the RFI: Include a detailed, legible description of item needing information or interpretation and the following:
1. Project name.
2. Project number.
3. Date.
4. Name of Contractor.
5. Name of Architect.
6. RFI number, numbered sequentially.
7. RFI subject.
8. Specification Section number and title and related paragraphs, as appropriate.
9. Drawing number and detail references, as appropriate.
10. Field dimensions and conditions, as appropriate.
11. Contractor's suggested resolution. If Contractor's solution(s) impacts the Contract Time or the Contract Sum, Contractor shall state impact in the RFI.
12. Contractor's signature.
13. Attachments: Include sketches, descriptions, measurements, photos, Product Data, Shop Drawings, coordination drawings, and other information necessary to fully describe items needing interpretation.

C. RFI Forms: AIA Document G716.

D. Architect's Action: Architect will review each RFI, determine action required, and respond. Allow seven working days for Architect's response for each RFI. RFIs received by Architect after 1:00 p.m. will be considered as received the following working day.
1. The following RFIs will be returned without action:
a. Requests for approval of submittals.
b. Requests for approval of substitutions.

c. Requests for coordination information already indicated in the Contract Documents.
d. Requests for adjustments in the Contract Time or the Contract Sum.
e. Requests for interpretation of Architect's actions on submittals.
f. Incomplete RFIs or inaccurately prepared RFIs.

2. Architect's action may include a request for additional information, in which case Architect's time for response will date from time of receipt of additional information.
3. Architect's action on RFIs that may result in a change to the Contract Time or the Contract Sum may be eligible for Contractor to submit Change Proposal according to Section 012600 "Contract Modification Procedures."
   a. If Contractor believes the RFI response warrants change in the Contract Time or the Contract Sum, notify Architect in writing within 10 days of receipt of the RFI response.

E. RFI Log: Prepare, maintain, and submit a tabular log of RFIs organized by the RFI number. Submit log weekly. Use CSI Log Form 13.2B.
1. Project name.
2. Name and address of Contractor.
3. Name and address of Architect.
4. RFI number including RFIs that were dropped and not submitted.
5. RFI description.
6. Date the RFI was submitted.
7. Date Architect's response was received.

F. On receipt of Architect's action, update the RFI log and immediately distribute the RFI response to affected parties. Review response and notify Architect within seven days if Contractor disagrees with response.
1. Identification of related Minor Change in the Work, Construction Change Directive, and Proposal Request, as appropriate.
2. Identification of related Field Order, Work Change Directive, and Proposal Request, as appropriate.

1.7 PROJECT MEETINGS

A. General: Schedule and conduct meetings and conferences at Project site unless otherwise indicated.
1. Attendees: Inform participants and others involved, and individuals whose presence is required, of date and time of each meeting. Notify Owner and Architect of scheduled meeting dates and times.
2. Agenda: Prepare the meeting agenda. Distribute the agenda to all invited attendees.
3. Minutes: Entity responsible for conducting meeting will record significant discussions and agreements achieved. Distribute the meeting minutes to everyone concerned, including Owner and Architect, within three days of the meeting.

B. Preconstruction Conference: Schedule and conduct a preconstruction conference before starting construction, at a time convenient to Owner and Architect, but no later than 15 days after execution of the Agreement.

1. Attendees: Authorized representatives of Owner, Architect, and their consultants; Contractor and its superintendent; major subcontractors; suppliers; and other concerned parties shall attend the conference. Participants at the conference shall be familiar with Project and authorized to conclude matters relating to the Work.
2. Agenda: Discuss items of significance that could affect progress, including the following:
   a. Tentative construction schedule.
   b. Phasing.
   c. Critical work sequencing and long-lead items.
   d. Designation of key personnel and their duties.
   e. Procedures for processing field decisions and Change Orders.
   f. Procedures for RFIs.
   g. Procedures for testing and inspecting.
   h. Procedures for processing Applications for Payment.
   i. Distribution of the Contract Documents.
   j. Submittal procedures.
   k. Preparation of record documents.
   l. Use of the premises and existing building.
   m. Work restrictions.
   n. Working hours.
   o. Owner's occupancy requirements.
   p. Responsibility for temporary facilities and controls.
   q. Procedures for moisture and mold control.
   r. Procedures for disruptions and shutdowns.
   s. Construction waste management and recycling.
   t. Parking availability.
   u. Office, work, and storage areas.
   v. Equipment deliveries and priorities.
   w. First aid.
   x. Security.
   y. Progress cleaning.
3. Minutes: Entity responsible for conducting meeting will record and distribute meeting minutes.

C. Preinstallation Conferences: Conduct a preinstallation conference at Project site before each construction activity that requires coordination with other construction.
1. Attendees: Installer and representatives of manufacturers and fabricators involved in or affected by the installation and its coordination or integration with other materials and installations that have preceded or will follow, shall attend the meeting. Advise Architect of scheduled meeting dates.
2. Agenda: Review progress of other construction activities and preparations for the particular activity under consideration, including requirements for the following:
   a. Contract Documents.
   b. Options.
   c. Related RFIs.
   d. Related Change Orders.
   e. Purchases.
   f. Deliveries.
   g. Submittals.
   h. Review of mockups.
   i. Possible conflicts.
   j. Compatibility problems.

k. Time schedules.
l. Weather limitations.
m. Manufacturer's written instructions.
n. Warranty requirements.
o. Compatibility of materials.
p. Acceptability of substrates.
q. Temporary facilities and controls.
r. Space and access limitations.
s. Regulations of authorities having jurisdiction.
t. Testing and inspecting requirements.
u. Installation procedures.
v. Coordination with other work.
w. Required performance results.
x. Protection of adjacent work.
y. Protection of construction and personnel.

3. Record significant conference discussions, agreements, and disagreements, including required corrective measures and actions.
4. Reporting: Distribute minutes of the meeting to each party present and to other parties requiring information.
5. Do not proceed with installation if the conference cannot be successfully concluded. Initiate whatever actions are necessary to resolve impediments to performance of the Work and reconvene the conference at earliest feasible date.

D. Progress Meetings: Conduct progress meetings at biweekly intervals.
1. Attendees: In addition to representatives of Owner and Architect, each contractor, subcontractor, supplier, and other entity concerned with current progress or involved in planning, coordination, or performance of future activities shall be represented at these meetings. All participants at the meeting shall be familiar with Project and authorized to conclude matters relating to the Work.
2. Agenda: Review and correct or approve minutes of previous progress meeting. Review other items of significance that could affect progress. Include topics for discussion as appropriate to status of Project.
a. Contractor's Construction Schedule: Review progress since the last meeting. Determine whether each activity is on time, ahead of schedule, or behind schedule, in relation to Contractor's construction schedule. Determine how construction behind schedule will be expedited; secure commitments from parties involved to do so. Discuss whether schedule revisions are required to ensure that current and subsequent activities will be completed within the Contract Time.
1) Review schedule for next period.
b. Review present and future needs of each entity present, including the following:
1) Interface requirements.
2) Sequence of operations.
3) Status of submittals.
4) Deliveries.
5) Off-site fabrication.
6) Access.
7) Site utilization.
8) Temporary facilities and controls.

9) Progress cleaning.
10) Quality and work standards.
11) Status of correction of deficient items.
12) Field observations.
13) Status of RFIs.
14) Status of proposal requests.
15) Pending changes.
16) Status of Change Orders.
17) Pending claims and disputes.
18) Documentation of information for payment requests.

3. Minutes: Entity responsible for conducting the meeting will record and distribute the meeting minutes to each party present and to parties requiring information.
   a. Schedule Updating: Revise Contractor's construction schedule after each progress meeting where revisions to the schedule have been made or recognized. Issue revised schedule concurrently with the report of each meeting.

PART 2 - PRODUCTS (Not Used)

PART 3 - EXECUTION (Not Used)

END OF SECTION 013100

SECTION 013200 - CONSTRUCTION PROGRESS DOCUMENTATION

PART 1 - GENERAL

1.1 SUMMARY

A. Section includes administrative and procedural requirements for documenting the progress of construction during performance of the Work, including the following:
   1. Contractor's construction schedule.
   2. Construction schedule updating reports.
   3. Daily construction reports.
   4. Site condition reports.

1.2 DEFINITIONS

A. Activity: A discrete part of a project that can be identified for planning, scheduling, monitoring, and controlling the construction project. Activities included in a construction schedule consume time and resources.
   1. Critical Activity: An activity on the critical path that must start and finish on the planned early start and finish times.
   2. Predecessor Activity: An activity that precedes another activity in the network.
   3. Successor Activity: An activity that follows another activity in the network.

B. CPM: Critical path method, which is a method of planning and scheduling a construction project where activities are arranged based on activity relationships. Network calculations determine when activities can be performed and the critical path of Project.

C. Critical Path: The longest connected chain of interdependent activities through the network schedule that establishes the minimum overall Project duration and contains no float.

D. Float: The measure of leeway in starting and completing an activity.
   1. Float time is not for the exclusive use or benefit of either Owner or Contractor, but is a jointly owned, expiring Project resource available to both parties as needed to meet schedule milestones and Contract completion date.

1.3 INFORMATIONAL SUBMITTALS

A. Format for Submittals: Submit required submittals in the following format:
   1. PDF electronic file.

B. Construction Schedule Updating Reports: Submit with Applications for Payment.

C. Daily Construction Reports: Submit at weekly intervals.

D. Site Condition Reports: Submit at time of discovery of differing conditions.

1.4 COORDINATION

A. Coordinate Contractor's construction schedule with the schedule of values, list of subcontracts, submittal schedule, progress reports, payment requests, and other required schedules and reports.
   1. Secure time commitments for performing critical elements of the Work from entities involved.
   2. Coordinate each construction activity in the network with other activities and schedule them in proper sequence.

PART 2 - PRODUCTS

2.1 CONTRACTOR'S CONSTRUCTION SCHEDULE, GENERAL

A. Time Frame: Extend schedule from date established for commencement of the Work to date of final completion.
   1. Contract completion date shall not be changed by submission of a schedule that shows an early completion date, unless specifically authorized by Change Order.

B. Activities: Treat each story or separate area as a separate numbered activity for each main element of the Work. Comply with the following:
   1. Activity Duration: Define activities so no activity is longer than 20 days, unless specifically allowed by Architect.
   2. Procurement Activities: Include procurement process activities for the following long lead items and major items, requiring a cycle of more than 60 days, as separate activities in schedule. Procurement cycle activities include, but are not limited to, submittals, approvals, purchasing, fabrication, and delivery.
   3. Submittal Review Time: Include review and resubmittal times indicated in Section 013300 "Submittal Procedures" in schedule. Coordinate submittal review times in Contractor's construction schedule with submittal schedule.
   4. Startup and Testing Time: Include no fewer than 15 days for startup and testing.
   5. Substantial Completion: Indicate completion in advance of date established for Substantial Completion, and allow time for Architect's administrative procedures necessary for certification of Substantial Completion.
   6. Punch List and Final Completion: Include not more than 30 days for completion of punch list items and final completion.

C. Constraints: Include constraints and work restrictions indicated in the Contract Documents and as follows in schedule, and show how the sequence of the Work is affected.
   1. Phasing: Arrange list of activities on schedule by phase.
   2. Work under More Than One Contract: Include a separate activity for each contract.
   3. Work by Owner: Include a separate activity for each portion of the Work performed by Owner.
   4. Work Restrictions: Show the effect of the following items on the schedule:
      a. Coordination with existing construction.
      b. Limitations of continued occupancies.
      c. Uninterruptible services.
      d. Partial occupancy before Substantial Completion.

e. Use of premises restrictions.
f. Provisions for future construction.
g. Seasonal variations.
h. Environmental control.

5. Work Stages: Indicate important stages of construction for each major portion of the Work.

D. Milestones: Include milestones indicated in the Contract Documents in schedule, including, but not limited to, the Notice to Proceed, Substantial Completion, and final completion.

E. Upcoming Work Summary: Prepare summary report indicating activities scheduled to occur or commence prior to submittal of next schedule update. Summarize the following issues:
1. Unresolved issues.
2. Unanswered Requests for Information.
3. Rejected or unreturned submittals.
4. Notations on returned submittals.
5. Pending modifications affecting the Work and Contract Time.

F. Recovery Schedule: When periodic update indicates the Work is 14 or more calendar days behind the current approved schedule, submit a separate recovery schedule indicating means by which Contractor intends to regain compliance with the schedule.

2.2 CONTRACTOR'S CONSTRUCTION SCHEDULE (GANTT CHART)

A. Gantt-Chart Schedule: Submit a comprehensive, fully developed, horizontal, Gantt-chart-type, Contractor's construction schedule within 30 days of date established for commencement of the Work.

B. Preparation: Indicate each significant construction activity separately. Identify first workday of each week with a continuous vertical line.
1. For construction activities that require three months or longer to complete, indicate an estimated completion percentage in 10 percent increments within time bar.

2.3 REPORTS

A. Daily Construction Reports: Prepare a daily construction report recording the following information concerning events at Project site:
1. List of subcontractors at Project site.
2. List of separate contractors at Project site.
3. Approximate count of personnel at Project site.
4. Equipment at Project site.
5. Material deliveries.
6. High and low temperatures and general weather conditions, including presence of rain or snow.
7. Accidents.
8. Meetings and significant decisions.
9. Unusual events.
10. Stoppages, delays, shortages, and losses.
11. Meter readings and similar recordings.
12. Emergency procedures.
13. Orders and requests of authorities having jurisdiction.

14. Change Orders received and implemented.
15. Construction Change Directives received and implemented.
16. Services connected and disconnected.
17. Equipment or system tests and startups.
18. Partial completions and occupancies.
19. Substantial Completions authorized.

B. Site Condition Reports: Immediately on discovery of a difference between site conditions and the Contract Documents, prepare and submit a detailed report. Submit with a Request for Information. Include a detailed description of the differing conditions, together with recommendations for changing the Contract Documents.

PART 3 - EXECUTION

3.1 CONTRACTOR'S CONSTRUCTION SCHEDULE

A. Contractor's Construction Schedule Updating: At monthly intervals, update schedule to reflect actual construction progress and activities. Issue schedule one week before each regularly scheduled progress meeting.
   1. Revise schedule immediately after each meeting or other activity where revisions have been recognized or made. Issue updated schedule concurrently with the report of each such meeting.
   2. Include a report with updated schedule that indicates every change, including, but not limited to, changes in logic, durations, actual starts and finishes, and activity durations.
   3. As the Work progresses, indicate final completion percentage for each activity.

B. Distribution: Distribute copies of approved schedule to Architect Owner, separate contractors, testing and inspecting agencies, and other parties identified by Contractor with a need-to-know schedule responsibility.
   1. Post copies in Project meeting rooms and temporary field offices.
   2. When revisions are made, distribute updated schedules to the same parties and post in the same locations. Delete parties from distribution when they have completed their assigned portion of the Work and are no longer involved in performance of construction activities.

END OF SECTION 013200

SECTION 013233 - PHOTOGRAPHIC DOCUMENTATION

PART 1 - GENERAL

1.1 SUMMARY

A. Section includes administrative and procedural requirements for the following:
   1. Preconstruction photographs.
   2. Periodic construction photographs.

B. Related Requirements:
   1. Section 017700 "Closeout Procedures" for submitting photographic documentation as Project Record Documents at Project closeout.

1.2 INFORMATIONAL SUBMITTALS

A. Key Plan: Submit key plan of Project site and building with notation of vantage points marked for location and direction of each photograph. Indicate elevation or story of construction. Include same information as corresponding photographic documentation.

B. Digital Photographs: Submit unaltered, original, full-size image files within three days of taking photographs.
   1. Digital Camera: Minimum sensor resolution of eight megapixels.
   2. Identification: Provide the following information with each image description in file metadata tag:
      a. Name of Project.
      b. Name and contact information for photographer.
      c. Date photograph was taken.
      d. Description of vantage point, indicating location, direction (by compass point), and elevation or story of construction.

1.3 USAGE RIGHTS

A. Obtain and transfer copyright usage rights from photographer to Owner for unlimited reproduction of photographic documentation.

PART 2 - PRODUCTS

2.1 PHOTOGRAPHIC MEDIA

A. Digital Images: Provide images in JPG format, with minimum size of eight megapixels.

PART 3 - EXECUTION

3.1 CONSTRUCTION PHOTOGRAPHS

A. Photographer: Engage a qualified photographer to take construction photographs.

B. General: Take photographs using the maximum range of depth of field, and that are in focus, to clearly show the Work. Photographs with blurry or out-of-focus areas will not be accepted.

1. Maintain key plan with each set of construction photographs that identifies each photographic location.

C. Digital Images: Submit digital images exactly as originally recorded in the digital camera, without alteration, manipulation, editing, or modifications using image-editing software.
   1. Date and Time: Include date and time in file name for each image.
   2. Field Office Images: Maintain one set of images accessible in the field office at Project site, available at all times for reference. Identify images in the same manner as those submitted to Architect.

D. Preconstruction Photographs: Before commencement of excavation, commencement of demolition, starting construction, take photographs of Project site and surrounding properties, including existing items to remain during construction, from different vantage points, as directed by Architect.
   1. Flag construction limits before taking construction photographs.
   2. Take 20 photographs to show existing conditions adjacent to property before starting the Work.
   3. Take 20 photographs of existing buildings either on or adjoining property to accurately record physical conditions at start of construction.

E. Periodic Construction Photographs: Take 20 photographs monthly, coinciding with the cutoff date associated with each Application for Payment. Select vantage points to show status of construction and progress since last photographs were taken.

F. Final Completion Construction Photographs: Take 20 color photographs after date of Substantial Completion for submission as Project Record Documents. Architect will inform photographer of desired vantage points.

END OF SECTION 013233

SECTION 013300 - SUBMITTAL PROCEDURES

PART 1 - GENERAL

1.1 SUMMARY

A. Section includes requirements for the submittal schedule and administrative and procedural requirements for submitting Shop Drawings, Product Data, Samples, and other submittals.

B. Related Requirements:
1. Section 013200 "Construction Progress Documentation" for submitting schedules and reports, including Contractor's construction schedule.
2. Section 017823 "Operation and Maintenance Data" for submitting operation and maintenance manuals.
3. Section 017839 "Project Record Documents" for submitting record Drawings, record Specifications, and record Product Data.
4. Section 017900 "Demonstration and Training" for submitting video recordings of demonstration of equipment and training of Owner's personnel.

1.2 DEFINITIONS

A. Action Submittals: Written and graphic information and physical samples that require Architect's responsive action.

B. Informational Submittals: Written and graphic information and physical samples that do not require Architect's responsive action. Submittals may be rejected for not complying with requirements.

1.3 ACTION SUBMITTALS

A. Submittal Schedule: Submit a schedule of submittals, arranged in chronological order by dates required by construction schedule. Include time required for review, ordering, manufacturing, fabrication, and delivery when establishing dates. Include additional time required for making corrections or revisions to submittals noted by Architect and additional time for handling and reviewing submittals required by those corrections.

1.4 SUBMITTAL ADMINISTRATIVE REQUIREMENTS

A. Architect's Digital Data Files: Electronic copies of digital data files of the Contract Drawings will not be provided by Architect for Contractor's use in preparing submittals.

B. Coordination: Coordinate preparation and processing of submittals with performance of construction activities.
1. Coordinate each submittal with fabrication, purchasing, testing, delivery, other submittals, and related activities that require sequential activity.
2. Coordinate transmittal of different types of submittals for related parts of the Work so processing will not be delayed

because of need to review submittals concurrently for coordination.
a. Architect reserves the right to withhold action on a submittal requiring coordination with other submittals until related submittals are received.

C. Processing Time: Allow time for submittal review, including time for resubmittals, as follows. Time for review shall commence on Architect's receipt of submittal. No extension of the Contract Time will be authorized because of failure to transmit submittals enough in advance of the Work to permit processing, including resubmittals.
1. Initial Review: Allow 15 days for initial review of each submittal. Allow additional time if coordination with subsequent submittals is required. Architect will advise Contractor when a submittal being processed must be delayed for coordination.
2. Intermediate Review: If intermediate submittal is necessary, process it in same manner as initial submittal.
3. Resubmittal Review: Allow 15 days for review of each resubmittal.

D. Paper Submittals: Place a permanent label or title block on each submittal item for identification.
1. Indicate name of firm or entity that prepared each submittal on label or title block.
2. Provide a space approximately 6 by 8 inches on label or beside title block to record Contractor's review and approval markings and action taken by Architect.
3. Include the following information for processing and recording action taken:
a. Project name.
b. Date.
c. Name of Architect.
d. Name of Construction Manager.
e. Name of Contractor.
f. Name of subcontractor.
g. Name of supplier.
h. Name of manufacturer.
i. Submittal number or other unique identifier, including revision identifier.
1) Submittal number shall use Specification Section number followed by a decimal point and then a sequential number (e.g., 061000.01). Resubmittals shall include an alphabetic suffix after another decimal point (e.g., 061000.01.A).
j. Number and title of appropriate Specification Section.
k. Drawing number and detail references, as appropriate.
l. Location(s) where product is to be installed, as appropriate.
m. Other necessary identification.
4. Additional Paper Copies: Unless additional copies are required for final submittal, and unless Architect observes noncompliance with provisions in the Contract Documents, initial submittal may serve as final submittal.
a. Submit one copy of submittal to concurrent reviewer in addition to specified number of copies to Architect.
5. Transmittal for Paper Submittals: Assemble each submittal individually and appropriately for transmittal and handling. Transmit each submittal using a transmittal form. Architect will discard submittals received from sources other than Contractor.

a. Transmittal Form for Paper Submittals: Provide locations on form for the following information:
   1) Project name.
   2) Date.
   3) Destination (To:).
   4) Source (From:).
   5) Name and address of Architect.
   6) Name of Construction Manager.
   7) Name of Contractor.
   8) Name of firm or entity that prepared submittal.
   9) Names of subcontractor, manufacturer, and supplier.
   10) Category and type of submittal.
   11) Submittal purpose and description.
   12) Specification Section number and title.
   13) Specification paragraph number or drawing designation and generic name for each of multiple items.
   14) Drawing number and detail references, as appropriate.
   15) Indication of full or partial submittal.
   16) Transmittal number, numbered consecutively.
   17) Submittal and transmittal distribution record.
   18) Remarks.
   19) Signature of transmitter.

E. Options: Identify options requiring selection by Architect.

F. Deviations: Identify deviations from the Contract Documents on submittals.

G. Resubmittals: Make resubmittals in same form and number of copies as initial submittal.
   1. Note date and content of previous submittal.
   2. Note date and content of revision in label or title block and clearly indicate extent of revision.
   3. Resubmit submittals until they are marked with approval notation from Architect's action stamp.

H. Distribution: Furnish copies of final submittals to manufacturers, subcontractors, suppliers, fabricators, installers, authorities having jurisdiction, and others as necessary for performance of construction activities. Show distribution on transmittal forms.

I. Use for Construction: Retain complete copies of submittals on Project site. Use only final action submittals that are marked with approval notation from Architect's action stamp.

PART 2 - PRODUCTS

2.1 SUBMITTAL PROCEDURES

A. General Submittal Procedure Requirements:
   1. Action Submittals: Submit three paper copies of each submittal unless otherwise indicated. Architect will return one copy.
   2. Informational Submittals: Submit two paper copies of each submittal unless otherwise indicated. Architect will not return copies.

3. Certificates and Certifications Submittals: Provide a statement that includes signature of entity responsible for preparing certification. Certificates and certifications shall be signed by an officer or other individual authorized to sign documents on behalf of that entity.
   a. Provide a notarized statement on original paper copy certificates and certifications where indicated.

B. Product Data: Collect information into a single submittal for each element of construction and type of product or equipment.
   1. If information must be specially prepared for submittal because standard published data are not suitable for use, submit as Shop Drawings, not as Product Data.
   2. Mark each copy of each submittal to show which products and options are applicable.
   3. Include the following information, as applicable:
      a. Manufacturer's catalog cuts.
      b. Manufacturer's product specifications.
      c. Standard color charts.
      d. Statement of compliance with specified referenced standards.
      e. Testing by recognized testing agency.
      f. Application of testing agency labels and seals.
      g. Notation of coordination requirements.
      h. Availability and delivery time information.
   4. For equipment, include the following in addition to the above, as applicable:
      a. Wiring diagrams showing factory-installed wiring.
      b. Printed performance curves.
      c. Operational range diagrams.
      d. Clearances required to other construction, if not indicated on accompanying Shop Drawings.
   5. Submit Product Data before or concurrent with Samples.
   6. Submit Product Data in the following format:
      a. Three paper copies of Product Data unless otherwise indicated. Architect will return one copy.

C. Shop Drawings: Prepare Project-specific information, drawn accurately to scale. Do not base Shop Drawings on reproductions of the Contract Documents or standard printed data.
   1. Preparation: Fully illustrate requirements in the Contract Documents. Include the following information, as applicable:
      a. Identification of products.
      b. Schedules.
      c. Compliance with specified standards.
      d. Notation of coordination requirements.
      e. Notation of dimensions established by field measurement.
      f. Relationship and attachment to adjoining construction clearly indicated.
      g. Seal and signature of professional engineer if specified.
   2. Sheet Size: Except for templates, patterns, and similar full-size drawings, submit Shop Drawings on sheets at least 8-1/2 by 11 inches, but no larger than 30 by 42 inches.
   3. Submit Shop Drawings in the following format:
      a. Three opaque copies of each submittal. Architect and Construction Manager will retain two copies; remainder will be returned.

D. Samples: Submit Samples for review of kind, color, pattern, and texture for a check of these characteristics with other elements and for a comparison of these characteristics between submittal and actual component as delivered and installed.
   1. Transmit Samples that contain multiple, related components such as accessories together in one submittal package.
   2. Identification: Attach label on unexposed side of Samples that includes the following:
      a. Generic description of Sample.
      b. Product name and name of manufacturer.
      c. Sample source.
      d. Number and title of applicable Specification Section.
   3. Disposition: Maintain sets of approved Samples at Project site, available for quality-control comparisons throughout the course of construction activity. Sample sets may be used to determine final acceptance of construction associated with each set.
      a. Samples that may be incorporated into the Work are indicated in individual Specification Sections. Such Samples must be in an undamaged condition at time of use.
      b. Samples not incorporated into the Work, or otherwise designated as Owner's property, are the property of Contractor.
   4. Samples for Initial Selection: Submit manufacturer's color charts consisting of units or sections of units showing the full range of colors, textures, and patterns available.
      a. Number of Samples: Submit two full set(s) of available choices where color, pattern, texture, or similar characteristics are required to be selected from manufacturer's product line. Architect will return submittal with options selected.
   5. Samples for Verification: Submit full-size units or Samples of size indicated, prepared from same material to be used for the Work, cured and finished in manner specified, and physically identical with material or product proposed for use, and that show full range of color and texture variations expected. Samples include, but are not limited to, the following: partial sections of manufactured or fabricated components; small cuts or containers of materials; complete units of repetitively used materials; swatches showing color, texture, and pattern; color range sets; and components used for independent testing and inspection.
      a. Number of Samples: Submit three sets of Samples. Architect will retain two Sample sets; remainder will be returned.
         1) If variation in color, pattern, texture, or other characteristic is inherent in material or product represented by a Sample, submit at least three sets of paired units that show approximate limits of variations.

E. Product Schedule: As required in individual Specification Sections, prepare a written summary indicating types of products required for the Work and their intended location. Include the following information in tabular form:
   1. Submit product schedule in the following format:
      a. Three paper copies of product schedule or list unless otherwise indicated. Architect will return one copy.

F. Coordination Drawings Submittals: Comply with requirements specified in Section 013100 "Project Management and Coordination."

G. Contractor's Construction Schedule: Comply with requirements specified in Section 013200 "Construction Progress Documentation."

H. Application for Payment and Schedule of Values: Comply with requirements specified in Section 012900 "Payment Procedures.

I. Test and Inspection Reports and Schedule of Tests and Inspections Submittals: Comply with requirements specified in Section 014000 "Quality Requirements."

J. Closeout Submittals and Maintenance Material Submittals: Comply with requirements specified in Section 017700 "Closeout Procedures."

K. Maintenance Data: Comply with requirements specified in Section 017823 "Operation and Maintenance Data."

L. Qualification Data: Prepare written information that demonstrates capabilities and experience of firm or person. Include lists of completed projects with project names and addresses, contact information of architects and owners, and other information specified.

M. Welding Certificates: Prepare written certification that welding procedures and personnel comply with requirements in the Contract Documents. Submit record of Welding Procedure Specification and Procedure Qualification Record on AWS forms. Include names of firms and personnel certified.

N. Installer Certificates: Submit written statements on manufacturer's letterhead certifying that Installer complies with requirements in the Contract Documents and, where required, is authorized by manufacturer for this specific Project.

O. Manufacturer Certificates: Submit written statements on manufacturer's letterhead certifying that manufacturer complies with requirements in the Contract Documents. Include evidence of manufacturing experience where required.

P. Product Certificates: Submit written statements on manufacturer's letterhead certifying that product complies with requirements in the Contract Documents.

Q. Material Certificates: Submit written statements on manufacturer's letterhead certifying that material complies with requirements in the Contract Documents.

R. Material Test Reports: Submit reports written by a qualified testing agency, on testing agency's standard form, indicating and interpreting test results of material for compliance with requirements in the Contract Documents.

S. Product Test Reports: Submit written reports indicating that current product produced by manufacturer complies with requirements in the Contract Documents. Base reports on evaluation of tests performed by

manufacturer and witnessed by a qualified testing agency, or on comprehensive tests performed by a qualified testing agency.

T. Research Reports: Submit written evidence, from a model code organization acceptable to authorities having jurisdiction, that product complies with building code in effect for Project.

U. Schedule of Tests and Inspections: Comply with requirements specified in Section 014000 "Quality Requirements."

V. Preconstruction Test Reports: Submit reports written by a qualified testing agency, on testing agency's standard form, indicating and interpreting results of tests performed before installation of product, for compliance with performance requirements in the Contract Documents.

W. Compatibility Test Reports: Submit reports written by a qualified testing agency, on testing agency's standard form, indicating and interpreting results of compatibility tests performed before installation of product. Include written recommendations for primers and substrate preparation needed for adhesion.

X. Field Test Reports: Submit written reports indicating and interpreting results of field tests performed either during installation of product or after product is installed in its final location, for compliance with requirements in the Contract Documents.

Y. Design Data: Prepare and submit written and graphic information, including, but not limited to, performance and design criteria, list of applicable codes and regulations, and calculations. Include list of assumptions and other performance and design criteria and a summary of loads. Include load diagrams if applicable. Provide name and version of software, if any, used for calculations. Include page numbers.

2.2 DELEGATED-DESIGN SERVICES

A. Performance and Design Criteria: Where professional design services or certifications by a design professional are specifically required of Contractor by the Contract Documents, provide products and systems complying with specific performance and design criteria indicated.
   1. If criteria indicated are not sufficient to perform services or certification required, submit a written request for additional information to Architect.

B. Delegated-Design Services Certification: In addition to Shop Drawings, Product Data, and other required submittals, submit three paper copies of certificate, signed and sealed by the responsible design professional, for each product and system specifically assigned to Contractor to be designed or certified by a design professional.
   1. Indicate that products and systems comply with performance and design criteria in the Contract Documents. Include list of codes, loads, and other factors used in performing these services.

PART 3 - EXECUTION

3.1 CONTRACTOR'S REVIEW

A. Action and Informational Submittals: Review each submittal and check for coordination with other Work of the Contract and for compliance with the Contract Documents. Note corrections and field dimensions. Mark with approval stamp before submitting to Architect.

B. Project Closeout and Maintenance Material Submittals: See requirements in Section 017700 "Closeout Procedures."

C. Approval Stamp: Stamp each submittal with a uniform, approval stamp. Include Project name and location, submittal number, Specification Section title and number, name of reviewer, date of Contractor's approval, and statement certifying that submittal has been reviewed, checked, and approved for compliance with the Contract Documents.

3.2 ARCHITECT'S ACTION

A. General: Architect will not review submittals that do not bear Contractor's approval stamp and will return them without action.

B. Action Submittals: Architect will review each submittal, make marks to indicate corrections or revisions required, and return it. Architect will stamp each submittal with an action stamp and will mark stamp appropriately to indicate action.

C. Informational Submittals: Architect will review each submittal and will not return it, or will return it if it does not comply with requirements. Architect will forward each submittal to appropriate party.

D. Incomplete submittals are unacceptable, will be considered nonresponsive, and will be returned for resubmittal without review.

E. Submittals not required by the Contract Documents may not be reviewed and may be discarded.

END OF SECTION 013300

SECTION 014000 - QUALITY REQUIREMENTS

PART 1 - GENERAL

1.1 SUMMARY

A. Section includes administrative and procedural requirements for quality assurance and quality control.

B. Testing and inspecting services are required to verify compliance with requirements specified or indicated. These services do not relieve Contractor of responsibility for compliance with the Contract Document requirements.
   1. Specified tests, inspections, and related actions do not limit Contractor's other quality-assurance and -control procedures that facilitate compliance with the Contract Document requirements.
   2. Requirements for Contractor to provide quality-assurance and -control services required by Architect, Owner or authorities having jurisdiction are not limited by provisions of this Section.
   3. Specific test and inspection requirements are not specified in this Section.

1.2 DEFINITIONS

A. Quality-Assurance Services: Activities, actions, and procedures performed before and during execution of the Work to guard against defects and deficiencies and substantiate that proposed construction will comply with requirements.

B. Quality-Control Services: Tests, inspections, procedures, and related actions during and after execution of the Work to evaluate that actual products incorporated into the Work and completed construction comply with requirements. Services do not include contract enforcement activities performed by Architect or Construction Manager.

C. Mockups: Full-size physical assemblies that are constructed on-site. Mockups are constructed to verify selections made under Sample submittals; to demonstrate aesthetic effects and, where indicated, qualities of materials and execution; to review coordination, testing, or operation; to show interface between dissimilar materials; and to demonstrate compliance with specified installation tolerances. Mockups are not Samples. Unless otherwise indicated, approved mockups establish the standard by which the Work will be judged.
   1. Laboratory Mockups: Full-size physical assemblies constructed at testing facility to verify performance characteristics.

D. Preconstruction Testing: Tests and inspections performed specifically for Project before products and materials are incorporated into the Work, to verify performance or compliance with specified criteria.

E. Product Testing: Tests and inspections that are performed by an NRTL, an NVLAP, or a testing agency qualified to conduct product testing and acceptable to authorities having jurisdiction, to establish product performance and compliance with specified requirements.

F. Source Quality-Control Testing: Tests and inspections that are performed at the source, e.g., plant, mill, factory, or shop.

G. Field Quality-Control Testing: Tests and inspections that are performed on-site for installation of the Work and for completed Work.

H. Testing Agency: An entity engaged to perform specific tests, inspections, or both. Testing laboratory shall mean the same as testing agency.

I. Installer/Applicator/Erector: Contractor or another entity engaged by Contractor as an employee, Subcontractor, or Sub-subcontractor, to perform a particular construction operation, including installation, erection, application, and similar operations.
   1. Use of trade-specific terminology in referring to a trade or entity does not require that certain construction activities be performed by accredited or unionized individuals, or that requirements specified apply exclusively to specific trade(s).

J. Experienced: When used with an entity or individual, "experienced" means having successfully completed a minimum of five previous projects similar in nature, size, and extent to this Project; being familiar with special requirements indicated; and having complied with requirements of authorities having jurisdiction.

1.3 CONFLICTING REQUIREMENTS

A. Referenced Standards: If compliance with two or more standards is specified and the standards establish different or conflicting requirements for minimum quantities or quality levels, comply with the most stringent requirement. Refer conflicting requirements that are different, but apparently equal, to Architect for a decision before proceeding.

B. Minimum Quantity or Quality Levels: The quantity or quality level shown or specified shall be the minimum provided or performed. The actual installation may comply exactly with the minimum quantity or quality specified, or it may exceed the minimum within reasonable limits. To comply with these requirements, indicated numeric values are minimum or maximum, as appropriate, for the context of requirements. Refer uncertainties to Architect for a decision before proceeding.

1.4 INFORMATIONAL SUBMITTALS

A. Contractor's Statement of Responsibility: When required by authorities having jurisdiction, submit copy of written statement of responsibility sent to authorities having jurisdiction before starting work on the following systems:
   1. Seismic-force-resisting system, designated seismic system, or component listed in the designated seismic system quality-assurance plan prepared by Architect.
   2. Main wind-force-resisting system or a wind-resisting component listed in the wind-force-resisting system quality-assurance plan prepared by Architect.

B. Testing Agency Qualifications: For testing agencies specified in "Quality Assurance" Article to demonstrate their capabilities and experience. Include proof of qualifications in the form of a recent report on the inspection of the testing agency by a recognized authority.

1.5 REPORTS AND DOCUMENTS

A. Test and Inspection Reports: Prepare and submit certified written reports specified in other Sections. Include the following:
1. Date of issue.
2. Project title and number.
3. Name, address, and telephone number of testing agency.
4. Dates and locations of samples and tests or inspections.
5. Names of individuals making tests and inspections.
6. Description of the Work and test and inspection method.
7. Identification of product and Specification Section.
8. Complete test or inspection data.
9. Test and inspection results and an interpretation of test results.
10. Record of temperature and weather conditions at time of sample taking and testing and inspecting.
11. Comments or professional opinion on whether tested or inspected Work complies with the Contract Document requirements.
12. Name and signature of laboratory inspector.
13. Recommendations on retesting and reinspecting.

B. Manufacturer's Field Reports: Prepare written information documenting tests and inspections specified in other Sections. Include the following:
1. Name, address, and telephone number of representative making report.
2. Statement on condition of substrates and their acceptability for installation of product.
3. Summary of installation procedures being followed, whether they comply with requirements and, if not, what corrective action was taken.
4. Results of operational and other tests and a statement of whether observed performance complies with requirements.
5. Other required items indicated in individual Specification Sections.

C. Permits, Licenses, and Certificates: For Owner's records, submit copies of permits, licenses, certifications, inspection reports, releases, jurisdictional settlements, notices, receipts for fee payments, judgments, correspondence, records, and similar documents, established for compliance with standards and regulations bearing on performance of the Work.

1.6 QUALITY ASSURANCE

A. General: Qualifications paragraphs in this article establish the minimum qualification levels required; individual Specification Sections specify additional requirements.

B. Manufacturer Qualifications: A firm experienced in manufacturing products or systems similar to those indicated for this Project and with a record of successful in-service performance, as well as sufficient production capacity to produce required units.

C. Fabricator Qualifications: A firm experienced in producing products similar to those indicated for this Project and with a record of successful in-service performance, as well as sufficient production capacity to produce required units.

D. Installer Qualifications: A firm or individual experienced in installing, erecting, or assembling work similar in material, design, and extent to that indicated for this Project, whose work has resulted in construction with a record of successful in-service performance.

E. Professional Engineer Qualifications: A professional engineer who is legally qualified to practice in jurisdiction where Project is located and who is experienced in providing engineering services of the kind indicated. Engineering services are defined as those performed for installations of the system, assembly, or product that are similar in material, design, and extent to those indicated for this Project.

F. Specialists: Certain Specification Sections require that specific construction activities shall be performed by entities who are recognized experts in those operations. Specialists shall satisfy qualification requirements indicated and shall be engaged for the activities indicated.
   1. Requirements of authorities having jurisdiction shall supersede requirements for specialists.

G. Testing Agency Qualifications: An NRTL, an NVLAP, or an independent agency with the experience and capability to conduct testing and inspecting indicated, as documented according to ASTM E 329; and with additional qualifications specified in individual Sections; and, where required by authorities having jurisdiction, that is acceptable to authorities.
   1. NRTL: A nationally recognized testing laboratory according to 29 CFR 1910.7.
   2. NVLAP: A testing agency accredited according to NIST's National Voluntary Laboratory Accreditation Program.

H. Manufacturer's Representative Qualifications: An authorized representative of manufacturer who is trained and approved by manufacturer to observe and inspect installation of manufacturer's products that are similar in material, design, and extent to those indicated for this Project.

I. Preconstruction Testing: Where testing agency is indicated to perform preconstruction testing for compliance with specified requirements for performance and test methods, comply with the following:
   1. Contractor responsibilities include the following:
      a. Provide test specimens representative of proposed products and construction.
      b. Submit specimens in a timely manner with sufficient time for testing and analyzing results to prevent delaying the Work.

c. Build laboratory mockups at testing facility using personnel, products, and methods of construction indicated for the completed Work.
d. When testing is complete, remove test specimens, assemblies, and mockups; do not reuse products on Project.

2. Testing Agency Responsibilities: Submit a certified written report of each test, inspection, and similar quality-assurance service to Architect with copy to Contractor. Interpret tests and inspections and state in each report whether tested and inspected work complies with or deviates from the Contract Documents.

J. Mockups: Before installing portions of the Work requiring mockups, build mockups for each form of construction and finish required to comply with the following requirements, using materials indicated for the completed Work:
1. Build mockups in location and of size indicated or, if not indicated, as directed by Architect.
2. Notify Architect seven days in advance of dates and times when mockups will be constructed.
3. Demonstrate the proposed range of aesthetic effects and workmanship.
4. Obtain Architect's approval of mockups before starting work, fabrication, or construction.
a. Allow seven days for initial review and each re-review of each mockup.
5. Maintain mockups during construction in an undisturbed condition as a standard for judging the completed Work.
6. Demolish and remove mockups when directed unless otherwise indicated.

K. Laboratory Mockups: Comply with requirements of preconstruction testing and those specified in individual Specification Sections.

1.7 QUALITY CONTROL

A. Owner Responsibilities: Where quality-control services are indicated as Owner's responsibility, Owner will engage a qualified testing agency to perform these services.
1. Owner will furnish Contractor with names, addresses, and telephone numbers of testing agencies engaged and a description of types of testing and inspecting they are engaged to perform.
2. Costs for retesting and reinspecting construction that replaces or is necessitated by work that failed to comply with the Contract Documents will be charged to Contractor, and the Contract Sum will be adjusted by Change Order.

B. Contractor Responsibilities: Tests and inspections not explicitly assigned to Owner are Contractor's responsibility. Perform additional quality-control activities required to verify that the Work complies with requirements, whether specified or not.
1. Where services are indicated as Contractor's responsibility, engage a qualified testing agency to perform these quality-control services.
a. Contractor shall not employ same entity engaged by Owner, unless agreed to in writing by Owner.

2. Notify testing agencies at least 24 hours in advance of time when Work that requires testing or inspecting will be performed.
3. Where quality-control services are indicated as Contractor's responsibility, submit a certified written report, in duplicate, of each quality-control service.
4. Testing and inspecting requested by Contractor and not required by the Contract Documents are Contractor's responsibility.
5. Submit additional copies of each written report directly to authorities having jurisdiction, when they so direct.

C. Manufacturer's Field Services: Where indicated, engage a manufacturer's representative to observe and inspect the Work. Manufacturer's representative's services include examination of substrates and conditions, verification of materials, inspection of completed portions of the Work, and submittal of written reports.

D. Retesting/Reinspecting: Regardless of whether original tests or inspections were Contractor's responsibility, provide quality-control services, including retesting and reinspecting, for construction that replaced Work that failed to comply with the Contract Documents.

E. Testing Agency Responsibilities: Cooperate with Architect and Contractor in performance of duties. Provide qualified personnel to perform required tests and inspections.
1. Notify Architect and Contractor promptly of irregularities or deficiencies observed in the Work during performance of its services.
2. Determine the location from which test samples will be taken and in which in-situ tests are conducted.
3. Conduct and interpret tests and inspections and state in each report whether tested and inspected work complies with or deviates from requirements.
4. Submit a certified written report, in duplicate, of each test, inspection, and similar quality-control service through Contractor.
5. Do not release, revoke, alter, or increase the Contract Document requirements or approve or accept any portion of the Work.
6. Do not perform any duties of Contractor.

F. Associated Services: Cooperate with agencies performing required tests, inspections, and similar quality-control services, and provide reasonable auxiliary services as requested. Notify agency sufficiently in advance of operations to permit assignment of personnel. Provide the following:
1. Access to the Work.
2. Incidental labor and facilities necessary to facilitate tests and inspections.
3. Adequate quantities of representative samples of materials that require testing and inspecting. Assist agency in obtaining samples.
4. Facilities for storage and field curing of test samples.
5. Delivery of samples to testing agencies.
6. Preliminary design mix proposed for use for material mixes that require control by testing agency.
7. Security and protection for samples and for testing and inspecting equipment at Project site.

G. Coordination: Coordinate sequence of activities to accommodate required quality-assurance and -control services with a minimum of delay and to avoid necessity of removing and replacing construction to accommodate testing and inspecting.
   1. Schedule times for tests, inspections, obtaining samples, and similar activities.

1.8 SPECIAL TESTS AND INSPECTIONS

A. Special Tests and Inspections: Conducted by a qualified testing agency as required by authorities having jurisdiction, as indicated in individual Specification Sections and as follows:
   1. Verifying that manufacturer maintains detailed fabrication and quality-control procedures and reviews the completeness and adequacy of those procedures to perform the Work.
   2. Notifying Architect and Contractor promptly of irregularities and deficiencies observed in the Work during performance of its services.
   3. Submitting a certified written report of each test, inspection, and similar quality-control service to Architect with copy to Contractor and to authorities having jurisdiction.
   4. Submitting a final report of special tests and inspections at Substantial Completion, which includes a list of unresolved deficiencies.
   5. Interpreting tests and inspections and stating in each report whether tested and inspected work complies with or deviates from the Contract Documents.
   6. Retesting and reinspecting corrected work.

PART 2 - PRODUCTS (Not Used)

PART 3 - EXECUTION

3.1 TEST AND INSPECTION LOG

A. Test and Inspection Log: Prepare a record of tests and inspections. Include the following:
   1. Date test or inspection was conducted.
   2. Description of the Work tested or inspected.
   3. Date test or inspection results were transmitted to Architect.
   4. Identification of testing agency or special inspector conducting test or inspection.

B. Maintain log at Project site. Post changes and revisions as they occur. Provide access to test and inspection log for Architect's reference during normal working hours.

3.2 REPAIR AND PROTECTION

A. General: On completion of testing, inspecting, sample taking, and similar services, repair damaged construction and restore substrates and finishes.
   1. Provide materials and comply with installation requirements specified in other Specification Sections or matching existing substrates and finishes. Restore patched areas and extend restoration into adjoining areas with durable seams that are as

invisible as possible. Comply with the Contract Document requirements for cutting and patching in Section 017300 "Execution."

B. Protect construction exposed by or for quality-control service activities.

C. Repair and protection are Contractor's responsibility, regardless of the assignment of responsibility for quality-control services.

END OF SECTION 014000

SECTION 015000 - TEMPORARY FACILITIES AND CONTROLS

PART 1 - GENERAL

1.1 SUMMARY

A. Section includes requirements for temporary utilities, support facilities, and security and protection facilities.

B. Related Requirements:
   1. Section 011000 "Summary" for work restrictions and limitations on utility interruptions.

1.2 USE CHARGES

A. General: Installation and removal of and use charges for temporary facilities shall be included in the Contract Sum unless otherwise indicated. Allow other entities to use temporary services and facilities without cost, including, but not limited to Architect, testing agencies, and authorities having jurisdiction.

B. Water and Sewer Service from Existing System: Water from Owner's existing water system is available for use without metering and without payment of use charges. Provide connections and extensions of services as required for construction operations.

C. Electric Power Service from Existing System: Electric power from Owner's existing system is available for use without metering and without payment of use charges. Provide connections and extensions of services as required for construction operations.

1.3 INFORMATIONAL SUBMITTALS

A. Site Plan: Show temporary facilities, utility hookups, staging areas, and parking areas for construction personnel.

B. Erosion- and Sedimentation-Control Plan: Show compliance with requirements of EPA Construction General Permit or authorities having jurisdiction, whichever is more stringent.

C. Fire-Safety Program: Show compliance with requirements of NFPA 241 and authorities having jurisdiction. Indicate Contractor personnel responsible for management of fire prevention program.

1.4 QUALITY ASSURANCE

A. Electric Service: Comply with NECA, NEMA, and UL standards and regulations for temporary electric service. Install service to comply with NFPA 70.

B. Tests and Inspections: Arrange for authorities having jurisdiction to test and inspect each temporary utility before use. Obtain required certifications and permits.

C. Accessible Temporary Egress: Comply with applicable provisions in [the U.S. Architectural & Transportation Barriers Compliance Board's ADA-ABA Accessibility Guidelines] [and] [ICC/ANSI A117.1].

1.5 PROJECT CONDITIONS

A. Temporary Use of Permanent Facilities: Engage Installer of each permanent service to assume responsibility for operation, maintenance, and protection of each permanent service during its use as a construction facility before Owner's acceptance, regardless of previously assigned responsibilities.

PART 2 - PRODUCTS

2.1 MATERIALS

A. Portable Chain-Link Fencing: Minimum 2-inch, 0.148-inch- thick, galvanized-steel, chain-link fabric fencing; minimum 6 feet high with galvanized-steel pipe posts; minimum 2-3/8-inch- OD line posts and 2-7/8-inch- OD corner and pull posts, with 1-5/8-inch- OD top and bottom rails. Provide galvanized-steel bases for supporting posts.

2.2 TEMPORARY FACILITIES

A. Field Offices, General: Prefabricated or mobile units with serviceable finishes, temperature controls, and foundations adequate for normal loading.

B. Common-Use Field Office: Of sufficient size to accommodate needs of Owner, Architect and construction personnel office activities and to accommodate Project meetings specified in other Division 01 Sections. Keep office clean and orderly.

C. Storage and Fabrication Sheds: Provide sheds sized, furnished, and equipped to accommodate materials and equipment for construction operations.

2.3 EQUIPMENT

A. Fire Extinguishers: Portable, UL rated; with class and extinguishing agent as required by locations and classes of fire exposures.

B. HVAC Equipment: Unless Owner authorizes use of permanent HVAC system, provide vented, self-contained, liquid-propane-gas or fuel-oil heaters with individual space thermostatic control.
   1. Use of gasoline-burning space heaters, open-flame heaters, or salamander-type heating units is prohibited.
   2. Heating Units: Listed and labeled for type of fuel being consumed, by a qualified testing agency acceptable to authorities having jurisdiction, and marked for intended location and application.
   3. Permanent HVAC System: If Owner authorizes use of permanent HVAC system for temporary use during construction, provide filter with MERV of eight at each return-air grille in system and remove at end of construction and clean HVAC system as required in Section 017700 "Closeout Procedures".

PART 3 - EXECUTION

3.1 INSTALLATION, GENERAL

A. Locate facilities where they will serve Project adequately and result in minimum interference with performance of the Work. Relocate and modify facilities as required by progress of the Work.
   1. Locate facilities to limit site disturbance as specified in Section 011000 "Summary."

B. Provide each facility ready for use when needed to avoid delay. Do not remove until facilities are no longer needed or are replaced by authorized use of completed permanent facilities.

3.2 TEMPORARY UTILITY INSTALLATION

A. General: Install temporary service or connect to existing service.
   1. Arrange with utility company, Owner, and existing users for time when service can be interrupted, if necessary, to make connections for temporary services.

B. Sewers and Drainage: Provide temporary utilities to remove effluent lawfully.
   1. Connect temporary sewers to municipal system as directed by authorities having jurisdiction.

C. Water Service: Connect to Owner's existing water service facilities. Clean and maintain water service facilities in a condition acceptable to Owner. At Substantial Completion, restore these facilities to condition existing before initial use.

D. Sanitary Facilities: Provide temporary toilets, wash facilities, and drinking water for use of construction personnel. Comply with requirements of authorities having jurisdiction for type, number, location, operation, and maintenance of fixtures and facilities.

E. Heating and Cooling: Provide temporary heating and cooling required by construction activities for curing or drying of completed installations or for protecting installed construction from adverse effects of low temperatures or high humidity. Select equipment that will not have a harmful effect on completed installations or elements being installed.

F. Ventilation and Humidity Control: Provide temporary ventilation required by construction activities for curing or drying of completed installations or for protecting installed construction from adverse effects of high humidity. Select equipment that will not have a harmful effect on completed installations or elements being installed. Coordinate ventilation requirements to produce ambient condition required and minimize energy consumption.

G. Electric Power Service: Connect to Owner's existing electric power service. Maintain equipment in a condition acceptable to Owner.

H. Lighting: Provide temporary lighting with local switching that provides adequate illumination for construction operations, observations, inspections, and traffic conditions.
   1. Install and operate temporary lighting that fulfills security and protection requirements without operating entire system.

I. Telephone Service: Provide temporary telephone service in common-use facilities for use by all construction personnel. Install one telephone line(s) for each field office.
   1. Provide additional telephone lines for the following:
      a. Provide a dedicated telephone line for each facsimile machine in each field office.
   2. At each telephone, post a list of important telephone numbers.
      a. Police and fire departments.
      b. Ambulance service.
      c. Contractor's home office.
      d. Contractor's emergency after-hours telephone number.
      e. Architect's office.
      f. Engineers' offices.
      g. Owner's office.
      h. Principal subcontractors' field and home offices.
   3. Provide superintendent with cellular telephone or portable two-way radio for use when away from field office.

3.3 SUPPORT FACILITIES INSTALLATION

A. General: Comply with the following:
   1. Provide construction for temporary offices, shops, and sheds located within construction area or within 30 feet of building lines that is noncombustible according to ASTM E 136. Comply with NFPA 241.
   2. Maintain support facilities until Architect schedules Substantial Completion inspection. Remove before Substantial Completion. Personnel remaining after Substantial Completion will be permitted to use permanent facilities, under conditions acceptable to Owner.

B. Traffic Controls: Comply with requirements of authorities having jurisdiction.
   1. Protect existing site improvements to remain including curbs, pavement, and utilities.
   2. Maintain access for fire-fighting equipment and access to fire hydrants.

C. Parking: Use designated areas of Owner's existing parking areas for construction personnel.

D. Dewatering Facilities and Drains: Comply with requirements of authorities having jurisdiction. Maintain Project site, excavations, and construction free of water.
   1. Dispose of rainwater in a lawful manner that will not result in flooding Project or adjoining properties or endanger permanent Work or temporary facilities.
   2. Remove snow and ice as required to minimize accumulations.

E. Project Signs: Provide Project signs as indicated. Unauthorized signs are not permitted.
   1. Identification Signs: Provide Project identification signs as indicated on Drawings.
   2. Temporary Signs: Provide other signs as indicated and as required to inform public and individuals seeking entrance to Project.
      a. Provide temporary, directional signs for construction personnel and visitors.
   3. Maintain and touchup signs so they are legible at all times.

F. Waste Disposal Facilities: Comply with requirements specified in Section 017419 "Construction Waste Management and Disposal."

G. Lifts and Hoists: Provide facilities necessary for hoisting materials and personnel.
   1. Truck cranes and similar devices used for hoisting materials are considered "tools and equipment" and not temporary facilities.

H. Temporary Elevator Use: Use of elevators is not permitted.

I. Temporary Stairs: Until permanent stairs are available, provide temporary stairs where ladders are not adequate.

J. Existing Stair Usage: Use of Owner's existing stairs will be permitted, provided stairs are cleaned and maintained in a condition acceptable to Owner. At Substantial Completion, restore stairs to condition existing before initial use.
   1. Provide protective coverings, barriers, devices, signs, or other procedures to protect stairs and to maintain means of egress. If stairs become damaged, restore damaged areas so no evidence remains of correction work.

K. Temporary Use of Permanent Stairs: Use of new stairs for construction traffic will be permitted, provided stairs are protected and finishes restored to new condition at time of Substantial Completion.

3.4 SECURITY AND PROTECTION FACILITIES INSTALLATION

A. Protection of Existing Facilities: Protect existing vegetation, equipment, structures, utilities, and other improvements at Project site and on adjacent properties, except those indicated to be removed or altered. Repair damage to existing facilities.

B. Environmental Protection: Provide protection, operate temporary facilities, and conduct construction as required to comply with environmental regulations and that minimize possible air, waterway, and subsoil contamination or pollution or other undesirable effects.

C. Temporary Erosion and Sedimentation Control: Provide measures to prevent soil erosion and discharge of soil-bearing water runoff and airborne dust to undisturbed areas and to adjacent properties and walkways, according to requirements of 2003 EPA Construction General Permit or authorities having jurisdiction, whichever is more stringent.

D. Stormwater Control: Comply with requirements of authorities having jurisdiction. Provide barriers in and around excavations and subgrade construction to prevent flooding by runoff of stormwater from heavy rains.

E. Tree and Plant Protection: Install temporary fencing located as indicated or outside the drip line of trees to protect vegetation from damage from construction operations. Protect tree root systems from damage, flooding, and erosion.

F. Pest Control: Engage pest-control service to recommend practices to minimize attraction and harboring of rodents, roaches, and other pests and to perform extermination and control procedures at regular intervals so Project will be free of pests and their residues at Substantial Completion. Perform control operations lawfully, using environmentally safe materials.

G. Site Enclosure Fence: Before construction operations begin, furnish and install site enclosure fence in a manner that will prevent people and animals from easily entering site except by entrance gates.
   1. Extent of Fence: As required to enclose entire Project site or portion determined sufficient to accommodate construction operations.
   2. Maintain security by limiting number of keys and restricting distribution to authorized personnel. Furnish one set of keys to Owner.

H. Security Enclosure and Lockup: Install temporary enclosure around partially completed areas of construction. Provide lockable entrances to prevent unauthorized entrance, vandalism, theft, and similar violations of security. Lock entrances at end of each work day.
   1. Watchman Service
      a. The Owner will not be responsible for loss due to theft or other damage which is not covered under Property Insurance. The Contractor shall make arrangements for watchman service as he considers necessary and he shall be responsible for all loss or damage of his property, equipment, material, etc. at the site, and he shall make good such damage or loss without any additional cost to the Owner.

I. Barricades, Warning Signs, and Lights: Comply with requirements of authorities having jurisdiction for erecting structurally adequate barricades, including warning signs and lighting.

J. Temporary Egress: Maintain temporary egress from existing occupied facilities as indicated and as required by authorities having jurisdiction.

K. Temporary Enclosures: Provide temporary enclosures for protection of construction, in progress and completed, from exposure, foul weather, other construction operations, and similar activities. Provide temporary weathertight enclosure for building exterior.
   1. Where heating or cooling is needed and permanent enclosure is not complete, insulate temporary enclosures.

L. Temporary Fire Protection: Install and maintain temporary fire-protection facilities of types needed to protect against reasonably predictable and controllable fire losses. Comply with NFPA 241; manage fire prevention program.
   1. Prohibit smoking in construction areas.
   2. Supervise welding operations, combustion-type temporary heating units, and similar sources of fire ignition according to requirements of authorities having jurisdiction.
   3. Develop and supervise an overall fire-prevention and -protection program for personnel at Project site. Review needs with local fire department and establish procedures to be followed. Instruct personnel in methods and procedures. Post warnings and information.
   4. Provide temporary standpipes and hoses for fire protection. Hang hoses with a warning sign stating that hoses are for fire-protection purposes only and are not to be removed. Match hose size with outlet size and equip with suitable nozzles.

3.5 MOISTURE AND MOLD CONTROL

A. Contractor's Moisture Protection Plan: Avoid trapping water in finished work. Document visible signs of mold that may appear during construction.

B. Exposed Construction Phase: Before installation of weather barriers, when materials are subject to wetting and exposure and to airborne mold spores, protect materials from water damage and keep porous and organic materials from coming into prolonged contact with concrete.

C. Partially Enclosed Construction Phase: After installation of weather barriers but before full enclosure and conditioning of building, when installed materials are still subject to infiltration of moisture and ambient mold spores, protect as follows:
   1. Do not load or install drywall or other porous materials or components, or items with high organic content, into partially enclosed building.
   2. Keep interior spaces reasonably clean and protected from water damage.
   3. Discard or replace water-damaged and wet material.
   4. Discard, replace, or clean stored or installed material that begins to grow mold.
   5. Perform work in a sequence that allows any wet materials adequate time to dry before enclosing the material in drywall or other interior finishes.

D. Controlled Construction Phase of Construction: After completing and sealing of the building enclosure but prior to the full operation of permanent HVAC systems, maintain as follows:
   1. Control moisture and humidity inside building by maintaining effective dry-in conditions.
   2. Remove materials that can not be completely restored to their manufactured moisture level within 48 hours.

3.6 OPERATION, TERMINATION, AND REMOVAL

A. Supervision: Enforce strict discipline in use of temporary facilities. To minimize waste and abuse, limit availability of temporary facilities to essential and intended uses.

B. Maintenance: Maintain facilities in good operating condition until removal.
   1. Maintain operation of temporary enclosures, heating, cooling, humidity control, ventilation, and similar facilities on a 24-hour basis where required to achieve indicated results and to avoid possibility of damage.

C. Temporary Facility Changeover: Do not change over from using temporary security and protection facilities to permanent facilities until Substantial Completion.

D. Termination and Removal: Remove each temporary facility when need for its service has ended, when it has been replaced by authorized use of a permanent facility, or no later than Substantial Completion. Complete or, if necessary, restore permanent construction that may have been delayed because of interference with temporary facility. Repair damaged Work, clean exposed surfaces, and replace construction that cannot be satisfactorily repaired.
   1. Materials and facilities that constitute temporary facilities are property of Contractor. Owner reserves right to take possession of Project identification signs.
   2. At Substantial Completion, repair, renovate, and clean permanent facilities used during construction period. Comply with final cleaning requirements specified in Section 017700 "Closeout Procedures."

END OF SECTION 015000

SECTION 016000 - PRODUCT REQUIREMENTS

PART 1 - GENERAL

1.1 SUMMARY

A. Section includes administrative and procedural requirements for selection of products for use in Project; product delivery, storage, and handling; manufacturers' standard warranties on products; special warranties; and comparable products.
   1. Warranties for the Work and products and installations of each Contractor shall be one (1) year unless specified otherwise in the individual sections of Divisions 02 through 35.

B. Related Requirements:
   1. Section 012500 "Substitution Procedures" for requests for substitutions.

1.2 DEFINITIONS

A. Products: Items obtained for incorporating into the Work, whether purchased for Project or taken from previously purchased stock. The term "product" includes the terms "material," "equipment," "system," and terms of similar intent.
   1. Named Products: Items identified by manufacturer's product name, including make or model number or other designation shown or listed in manufacturer's published product literature, that is current as of date of the Contract Documents.
   2. New Products: Items that have not previously been incorporated into another project or facility. Products salvaged or recycled from other projects are not considered new products.
   3. Comparable Product: Product that is demonstrated and approved through submittal process to have the indicated qualities related to type, function, dimension, in-service performance, physical properties, appearance, and other characteristics that equal or exceed those of specified product.

B. Basis-of-Design Product Specification: A specification in which a specific manufacturer's product is named and accompanied by the words "basis-of-design product," including make or model number or other designation, to establish the significant qualities related to type, function, dimension, in-service performance, physical properties, appearance, and other characteristics for purposes of evaluating comparable products of additional manufacturers named in the specification.

1.3 ACTION SUBMITTALS

A. Comparable Product Requests: Submit request for consideration of each comparable product. Identify product or fabrication or installation method to be replaced. Include Specification Section number and title and Drawing numbers and titles.
   1. Architect's Action: If necessary, Architect will request additional information or documentation for evaluation within one week of receipt of a comparable product request. Architect will

notify Contractor of approval or rejection of proposed comparable product request within 15 days of receipt of request, or seven days of receipt of additional information or documentation, whichever is later.

a. Form of Approval: As specified in Section 013300 "Submittal Procedures."
b. Use product specified if Architect does not issue a decision on use of a comparable product request within time allocated.

B. Basis-of-Design Product Specification Submittal: Comply with requirements in Section 013300 "Submittal Procedures." Show compliance with requirements.

1.4 QUALITY ASSURANCE

A. Compatibility of Options: If Contractor is given option of selecting between two or more products for use on Project, select product compatible with products previously selected, even if previously selected products were also options.

1.5 PRODUCT DELIVERY, STORAGE, AND HANDLING

A. Deliver, store, and handle products using means and methods that will prevent damage, deterioration, and loss, including theft and vandalism. Comply with manufacturer's written instructions.

B. Delivery and Handling:
1. Schedule delivery to minimize long-term storage at Project site and to prevent overcrowding of construction spaces.
2. Coordinate delivery with installation time to ensure minimum holding time for items that are flammable, hazardous, easily damaged, or sensitive to deterioration, theft, and other losses.
3. Deliver products to Project site in an undamaged condition in manufacturer's original sealed container or other packaging system, complete with labels and instructions for handling, storing, unpacking, protecting, and installing.
4. Inspect products on delivery to determine compliance with the Contract Documents and to determine that products are undamaged and properly protected.

C. Storage:
1. Store products to allow for inspection and measurement of quantity or counting of units.
2. Store materials in a manner that will not endanger Project structure.
3. Store products that are subject to damage by the elements, under cover in a weathertight enclosure above ground, with ventilation adequate to prevent condensation.
4. Protect foam plastic from exposure to sunlight, except to extent necessary for period of installation and concealment.
5. Comply with product manufacturer's written instructions for temperature, humidity, ventilation, and weather-protection requirements for storage.
6. Protect stored products from damage and liquids from freezing.

1.6 PRODUCT WARRANTIES

A. Warranties specified in other Sections shall be in addition to, and run concurrent with, other warranties required by the Contract Documents. Manufacturer's disclaimers and limitations on product warranties do not relieve Contractor of obligations under requirements of the Contract Documents.
   1. Manufacturer's Warranty: Written warranty furnished by individual manufacturer for a particular product and specifically endorsed by manufacturer to Owner.
   2. Special Warranty: Written warranty required by the Contract Documents to provide specific rights for Owner.

B. Special Warranties: Prepare a written document that contains appropriate terms and identification, ready for execution.
   1. Manufacturer's Standard Form: Modified to include Project-specific information and properly executed.
   2. Specified Form: When specified forms are included with the Specifications, prepare a written document using indicated form properly executed.
   3. Refer to other Sections for specific content requirements and particular requirements for submitting special warranties.

C. Warranty Requirements
   1. Related Damages and Losses: When correcting warranted Work that has failed, remove and replace other Work that has been damaged as a result of such failure or that must be removed and replaced to provide access for correction of warranted Work.
   2. Reinstatement of Warranty: When Work covered has failed and been corrected by replacement or rebuilding, reinstate the warranty by written endorsement. The reinstated warranty shall be equal to the original warranty with an equitable adjustment for depreciation.
   3. Replacement cost: Upon determination that Work covered by a warranty has failed, replace or rebuild the Work to an acceptable condition complying with requirements of the Contract Documents. The Contractor is responsible for the cost of replacing or rebuilding defective Work regardless of whether the Owner has benefited from use of the Work through a portion of its anticipated useful service life.
   4. Owner’s Recourse: Written warranties made to the Owner are in addition to implied warranties, and shall not limit the duties, obligations, rights, and remedies otherwise available under the law, nor shall warranty periods be interpreted as limitations on time in which the Owner can enforce such other duties, obligations, rights, or remedies.
      a. Rejection of Warranties: The Owner reserves the rights to reject warranties and to limit selections to products with warranties not in conflict with requirements of the Contract Documents.
   5. The Owner reserves the right to refuse to accept Work for the Project where a special warranty, certification, or similar commitment is required on such Work or part of the Work, until evidence is presented that entities required to countersign such commitments are willing to do so.

D. Submittal Time: Comply with requirements in Section 017700 "Closeout Procedures."

PART 2 - PRODUCTS

2.1 PRODUCT SELECTION PROCEDURES

A. General Product Requirements: Provide products that comply with the Contract Documents, are undamaged and, unless otherwise indicated, are new at time of installation.
   1. Provide products complete with accessories, trim, finish, fasteners, and other items needed for a complete installation and indicated use and effect.
   2. Standard Products: If available, and unless custom products or nonstandard options are specified, provide standard products of types that have been produced and used successfully in similar situations on other projects.
   3. Owner reserves the right to limit selection to products with warranties not in conflict with requirements of the Contract Documents.
   4. Where products are accompanied by the term "as selected," Architect will make selection.
   5. Descriptive, performance, and reference standard requirements in the Specifications establish salient characteristics of products.

B. Product Selection Procedures:
   1. Product: Where Specifications name a single manufacturer and product, provide the named product that complies with requirements. Comparable products or substitutions for Contractor's convenience will not be considered.
   2. Manufacturer/Source: Where Specifications name a single manufacturer or source, provide a product by the named manufacturer or source that complies with requirements. Comparable products or substitutions for Contractor's convenience will not be considered.
   3. Products:
      a. Restricted List: Where Specifications include a list of names of both manufacturers and products, provide one of the products listed that complies with requirements. Comparable products or substitutions for Contractor's convenience will not be considered unless otherwise indicated.
      b. Nonrestricted List: Where Specifications include a list of names of both available manufacturers and products, provide one of the products listed, or an unnamed product, that complies with requirements. Comply with requirements in "Comparable Products" Article for consideration of an unnamed product.
   4. Manufacturers:
      a. Restricted List: Where Specifications include a list of manufacturers' names, provide a product by one of the manufacturers listed that complies with requirements. Comparable products or substitutions for Contractor's convenience will not be considered unless otherwise indicated.
      b. Nonrestricted List: Where Specifications include a list of available manufacturers, provide a product by one of the

manufacturers listed, or a product by an unnamed manufacturer, that complies with requirements. Comply with requirements in "Comparable Products" Article for consideration of an unnamed manufacturer's product.

5. Basis-of-Design Product: Where Specifications name a product, or refer to a product indicated on Drawings, and include a list of manufacturers, provide the specified or indicated product or a comparable product by one of the other named manufacturers. Drawings and Specifications indicate sizes, profiles, dimensions, and other characteristics that are based on the product named. Comply with requirements in "Comparable Products" Article for consideration of an unnamed product by one of the other named manufacturers.

C. Visual Matching Specification: Where Specifications require "match Architect's sample", provide a product that complies with requirements and matches Architect's sample. Architect's decision will be final on whether a proposed product matches.
   1. If no product available within specified category matches and complies with other specified requirements, comply with requirements in Section 012500 "Substitution Procedures" for proposal of product.

D. Visual Selection Specification: Where Specifications include the phrase "as selected by Architect from manufacturer's full range" or similar phrase, select a product that complies with requirements. Architect will select color, gloss, pattern, density, or texture from manufacturer's product line that includes both standard and premium items.

2.2 COMPARABLE PRODUCTS

A. Conditions for Consideration: Architect will consider Contractor's request for comparable product when the following conditions are satisfied. If the following conditions are not satisfied, Architect may return requests without action, except to record noncompliance with these requirements:
   1. Evidence that the proposed product does not require revisions to the Contract Documents, that it is consistent with the Contract Documents and will produce the indicated results, and that it is compatible with other portions of the Work.
   2. Detailed comparison of significant qualities of proposed product with those named in the Specifications. Significant qualities include attributes such as performance, weight, size, durability, visual effect, and specific features and requirements indicated.
   3. Evidence that proposed product provides specified warranty.
   4. List of similar installations for completed projects with project names and addresses and names and addresses of architects and owners, if requested.
   5. Samples, if requested.

PART 3 - EXECUTION (Not Used)

END OF SECTION 016000

SECTION 017300 - EXECUTION

PART 1 - GENERAL

1.1 SUMMARY

A. Section includes general administrative and procedural requirements governing execution of the Work including, but not limited to, the following:
   1. Construction layout.
   2. Field engineering and surveying.
   3. Installation of the Work.
   4. Cutting and patching.
   5. Coordination of Owner-installed products.
   6. Progress cleaning.
   7. Starting and adjusting.
   8. Protection of installed construction.

B. Related Requirements:
   1. Section 011000 "Summary" for limits on use of Project site.
   2. Section 017700 "Closeout Procedures" for submitting final property survey with Project Record Documents, recording of Owner-accepted deviations from indicated lines and levels, and final cleaning.

1.2 INFORMATIONAL SUBMITTALS

A. Certificates: Submit certificate signed by land surveyor certifying that location and elevation of improvements comply with requirements.

B. Landfill Receipts: Submit copy of receipts issued by a landfill facility, licensed to accept hazardous materials, for hazardous waste disposal.

C. Certified Surveys: Submit two copies signed by land surveyor.

1.3 QUALITY ASSURANCE

A. Land Surveyor Qualifications: A professional land surveyor who is legally qualified to practice in jurisdiction where Project is located and who is experienced in providing land-surveying services of the kind indicated.

B. Cutting and Patching: Comply with requirements for and limitations on cutting and patching of construction elements.
   1. Structural Elements: When cutting and patching structural elements, notify Architect of locations and details of cutting and await directions from Architect before proceeding. Shore, brace, and support structural element during cutting and patching. Do not cut and patch structural elements in a manner that could change their load-carrying capacity or increase deflection
   2. Operational Elements: Do not cut and patch operating elements and related components in a manner that results in reducing their

capacity to perform as intended or that results in increased maintenance or decreased operational life or safety.

3. Other Construction Elements: Do not cut and patch other construction elements or components in a manner that could change their load-carrying capacity, that results in reducing their capacity to perform as intended, or that results in increased maintenance or decreased operational life or safety.
4. Visual Elements: Do not cut and patch construction in a manner that results in visual evidence of cutting and patching. Do not cut and patch exposed construction in a manner that would, in Architect's opinion, reduce the building's aesthetic qualities. Remove and replace construction that has been cut and patched in a visually unsatisfactory manner.

PART 2 - PRODUCTS

2.1 MATERIALS

A. General: Comply with requirements specified in other Sections.

B. In-Place Materials: Use materials for patching identical to in-place materials. For exposed surfaces, use materials that visually match in-place adjacent surfaces to the fullest extent possible.
1. If identical materials are unavailable or cannot be used, use materials that, when installed, will provide a match acceptable to Architect for the visual and functional performance of in-place materials.

PART 3 - EXECUTION

3.1 EXAMINATION

A. Existing Conditions: The existence and location of underground and other utilities and construction indicated as existing are not guaranteed. Before beginning sitework, investigate and verify the existence and location of underground utilities, mechanical and electrical systems, and other construction affecting the Work.
1. Before construction, verify the location and invert elevation at points of connection of sanitary sewer, storm sewer, and water-service piping; underground electrical services, and other utilities.
2. Furnish location data for work related to Project that must be performed by public utilities serving Project site.

B. Examination and Acceptance of Conditions: Before proceeding with each component of the Work, examine substrates, areas, and conditions, with Installer or Applicator present where indicated, for compliance with requirements for installation tolerances and other conditions affecting performance. Record observations.
1. Examine roughing-in for mechanical and electrical systems to verify actual locations of connections before equipment and fixture installation.
2. Examine walls, floors, and roofs for suitable conditions where products and systems are to be installed.
3. Verify compatibility with and suitability of substrates, including compatibility with existing finishes or primers.

C. Proceed with installation only after unsatisfactory conditions have been corrected. Proceeding with the Work indicates acceptance of surfaces and conditions.

3.2 PREPARATION

A. Existing Utility Information: Furnish information to Owner that is necessary to adjust, move, or relocate existing utility structures, utility poles, lines, services, or other utility appurtenances located in or affected by construction. Coordinate with authorities having jurisdiction.

B. Field Measurements: Take field measurements as required to fit the Work properly. Recheck measurements before installing each product. Where portions of the Work are indicated to fit to other construction, verify dimensions of other construction by field measurements before fabrication. Coordinate fabrication schedule with construction progress to avoid delaying the Work.

C. Space Requirements: Verify space requirements and dimensions of items shown diagrammatically on Drawings.

D. Review of Contract Documents and Field Conditions: Immediately on discovery of the need for clarification of the Contract Documents caused by differing field conditions outside the control of Contractor, submit a request for information to Architect according to requirements in Section 013100 "Project Management and Coordination."

3.3 CONSTRUCTION LAYOUT

A. Verification: Before proceeding to lay out the Work, verify layout information shown on Drawings, in relation to the property survey and existing benchmarks. If discrepancies are discovered, notify Architect promptly.

B. General: Engage a land surveyor to lay out the Work using accepted surveying practices.
   1. Establish benchmarks and control points to set lines and levels at each story of construction and elsewhere as needed to locate each element of Project.
   2. Establish limits on use of Project site.
   3. Establish dimensions within tolerances indicated. Do not scale Drawings to obtain required dimensions.
   4. Inform installers of lines and levels to which they must comply.
   5. Check the location, level and plumb, of every major element as the Work progresses.
   6. Notify Architect when deviations from required lines and levels exceed allowable tolerances.
   7. Close site surveys with an error of closure equal to or less than the standard established by authorities having jurisdiction.

C. Site Improvements: Locate and lay out site improvements, including pavements, grading, fill and topsoil placement, utility slopes, and rim and invert elevations.

D. Building Lines and Levels: Locate and lay out control lines and levels for structures, building foundations, column grids, and floor levels, including those required for mechanical and electrical work. Transfer survey markings and elevations for use with control lines and levels. Level foundations and piers from two or more locations.

E. Record Log: Maintain a log of layout control work. Record deviations from required lines and levels. Include beginning and ending dates and times of surveys, weather conditions, name and duty of each survey party member, and types of instruments and tapes used. Make the log available for reference by Architect.

3.4 FIELD ENGINEERING

A. Reference Points: Locate existing permanent benchmarks, control points, and similar reference points before beginning the Work. Preserve and protect permanent benchmarks and control points during construction operations.

B. Benchmarks: Establish and maintain a minimum of two permanent benchmarks on Project site, referenced to data established by survey control points. Comply with authorities having jurisdiction for type and size of benchmark.
   1. Record benchmark locations, with horizontal and vertical data, on Project Record Documents.

C. Certified Survey: On completion of foundation walls, major site improvements, and other work requiring field-engineering services, prepare a certified survey showing dimensions, locations, angles, and elevations of construction and sitework.

3.5 INSTALLATION

A. General: Locate the Work and components of the Work accurately, in correct alignment and elevation, as indicated.
   1. Make vertical work plumb and make horizontal work level.
   2. Where space is limited, install components to maximize space available for maintenance and ease of removal for replacement.
   3. Conceal pipes, ducts, and wiring in finished areas unless otherwise indicated.

B. Comply with manufacturer's written instructions and recommendations for installing products in applications indicated.

C. Install products at the time and under conditions that will ensure the best possible results. Maintain conditions required for product performance until Substantial Completion.

D. Conduct construction operations so no part of the Work is subjected to damaging operations or loading in excess of that expected during normal conditions of occupancy.

E. Sequence the Work and allow adequate clearances to accommodate movement of construction items on site and placement in permanent locations.

F. Tools and Equipment: Do not use tools or equipment that produce harmful noise levels.

G. Templates: Obtain and distribute to the parties involved templates for work specified to be factory prepared and field installed. Check Shop Drawings of other work to confirm that adequate provisions are made for locating and installing products to comply with indicated requirements.

H. Attachment: Provide blocking and attachment plates and anchors and fasteners of adequate size and number to securely anchor each component in place, accurately located and aligned with other portions of the Work. Where size and type of attachments are not indicated, verify size and type required for load conditions.
   1. Mounting Heights: Where mounting heights are not indicated, mount components at heights directed by Architect.
   2. Allow for building movement, including thermal expansion and contraction.
   3. Coordinate installation of anchorages. Furnish setting drawings, templates, and directions for installing anchorages, including sleeves, concrete inserts, anchor bolts, and items with integral anchors, that are to be embedded in concrete or masonry. Deliver such items to Project site in time for installation.

I. Joints: Make joints of uniform width. Where joint locations in exposed work are not indicated, arrange joints for the best visual effect. Fit exposed connections together to form hairline joints.

J. Hazardous Materials: Use products, cleaners, and installation materials that are not considered hazardous.

3.6 CUTTING AND PATCHING

A. Cutting and Patching, General: Employ skilled workers to perform cutting and patching. Proceed with cutting and patching at the earliest feasible time, and complete without delay.
   1. Cut in-place construction to provide for installation of other components or performance of other construction, and subsequently patch as required to restore surfaces to their original condition.

B. Existing Warranties: Remove, replace, patch, and repair materials and surfaces cut or damaged during installation or cutting and patching operations, by methods and with materials so as not to void existing warranties.

C. Temporary Support: Provide temporary support of work to be cut.

D. Protection: Protect in-place construction during cutting and patching to prevent damage. Provide protection from adverse weather conditions for portions of Project that might be exposed during cutting and patching operations.

E. Adjacent Occupied Areas: Avoid interference with use of adjoining areas or interruption of free passage to adjoining areas.

F. Existing Utility Services and Mechanical/Electrical Systems: Where existing services/systems are required to be removed, relocated, or abandoned, bypass such services/systems before cutting to minimize interruption to occupied areas.

G. Cutting: Cut in-place construction by sawing, drilling, breaking, chipping, grinding, and similar operations, including excavation, using methods least likely to damage elements retained or adjoining construction. If possible, review proposed procedures with original Installer; comply with original Installer's written recommendations.
   1. In general, use hand or small power tools designed for sawing and grinding, not hammering and chopping. Cut holes and slots neatly to minimum size required, and with minimum disturbance of adjacent surfaces. Temporarily cover openings when not in use.
   2. Finished Surfaces: Cut or drill from the exposed or finished side into concealed surfaces.
   3. Concrete and Masonry: Cut using a cutting machine, such as an abrasive saw or a diamond-core drill.
   4. Excavating and Backfilling: Comply with requirements in applicable Sections where required by cutting and patching operations.
   5. Mechanical and Electrical Services: Cut off pipe or conduit in walls or partitions to be removed. Cap, valve, or plug and seal remaining portion of pipe or conduit to prevent entrance of moisture or other foreign matter after cutting.
   6. Proceed with patching after construction operations requiring cutting are complete.

H. Patching: Patch construction by filling, repairing, refinishing, closing up, and similar operations following performance of other work. Patch with durable seams that are as invisible as practicable. Provide materials and comply with installation requirements specified in other Sections, where applicable.
   1. Inspection: Where feasible, test and inspect patched areas after completion to demonstrate physical integrity of installation.
   2. Exposed Finishes: Restore exposed finishes of patched areas and extend finish restoration into retained adjoining construction in a manner that will minimize evidence of patching and refinishing.
   3. Floors and Walls: Where walls or partitions that are removed extend one finished area into another, patch and repair floor and wall surfaces in the new space. Provide an even surface of uniform finish, color, texture, and appearance. Remove in-place floor and wall coverings and replace with new materials, if necessary, to achieve uniform color and appearance.
   4. Ceilings: Patch, repair, or rehang in-place ceilings as necessary to provide an even-plane surface of uniform appearance.
   5. Exterior Building Enclosure: Patch components in a manner that restores enclosure to a weathertight condition and ensures thermal and moisture integrity of building enclosure.

I. Cleaning: Clean areas and spaces where cutting and patching are performed. Remove paint, mortar, oils, putty, and similar materials from adjacent finished surfaces.

3.7 PROGRESS CLEANING

A. General: Clean Project site and work areas daily, including common areas. Enforce requirements strictly. Dispose of materials lawfully.
   1. Comply with requirements in NFPA 241 for removal of combustible waste materials and debris.
   2. Do not hold waste materials more than seven days during normal weather or three days if the temperature is expected to rise above 80 deg F.
   3. Containerize hazardous and unsanitary waste materials separately from other waste. Mark containers appropriately and dispose of legally, according to regulations.

B. Site: Maintain Project site free of waste materials and debris.

C. Work Areas: Clean areas where work is in progress to the level of cleanliness necessary for proper execution of the Work.
   1. Remove liquid spills promptly.
   2. Where dust would impair proper execution of the Work, broom-clean or vacuum the entire work area, as appropriate.

D. Installed Work: Keep installed work clean. Clean installed surfaces according to written instructions of manufacturer or fabricator of product installed, using only cleaning materials specifically recommended. If specific cleaning materials are not recommended, use cleaning materials that are not hazardous to health or property and that will not damage exposed surfaces.

E. Concealed Spaces: Remove debris from concealed spaces before enclosing the space.

F. Exposed Surfaces in Finished Areas: Clean exposed surfaces and protect as necessary to ensure freedom from damage and deterioration at time of Substantial Completion.

G. Waste Disposal: Do not bury or burn waste materials on-site. Do not wash waste materials down sewers or into waterways.

H. During handling and installation, clean and protect construction in progress and adjoining materials already in place. Apply protective covering where required to ensure protection from damage or deterioration at Substantial Completion.

I. Clean and provide maintenance on completed construction as frequently as necessary through the remainder of the construction period. Adjust and lubricate operable components to ensure operability without damaging effects.

J. Limiting Exposures: Supervise construction operations to assure that no part of the construction, completed or in progress, is subject to harmful, dangerous, damaging, or otherwise deleterious exposure during the construction period.

3.8 STARTING AND ADJUSTING

A. Start equipment and operating components to confirm proper operation. Remove malfunctioning units, replace with new units, and retest.

B. Adjust equipment for proper operation. Adjust operating components for proper operation without binding.

C. Test each piece of equipment to verify proper operation. Test and adjust controls and safeties. Replace damaged and malfunctioning controls and equipment.

D. Manufacturer's Field Service: Comply with qualification requirements in Section 014000 "Quality Requirements"

3.9 PROTECTION OF INSTALLED CONSTRUCTION

A. Provide final protection and maintain conditions that ensure installed Work is without damage or deterioration at time of Substantial Completion.

B. Comply with manufacturer's written instructions for temperature and relative humidity.

END OF SECTION 017300

SECTION 017700 - CLOSEOUT PROCEDURES

PART 1 - GENERAL

1.1 SUMMARY

A. Section includes administrative and procedural requirements for contract closeout, including, but not limited to, the following:
   1. Substantial Completion procedures.
   2. Final completion procedures.
   3. Warranties.
   4. Final cleaning.
   5. Repair of the Work.

B. Related Requirements:
   1. Section 013233 "Photographic Documentation" for submitting final completion construction photographic documentation.
   2. Section 017823 "Operation and Maintenance Data" for operation and maintenance manual requirements.
   3. Section 017839 "Project Record Documents" for submitting record Drawings, record Specifications, and record Product Data.
   4. Section 017900 "Demonstration and Training" for requirements for instructing Owner's personnel.

1.2 ACTION SUBMITTALS

A. Product Data: For cleaning agents.

B. Contractor's List of Incomplete Items: Initial submittal at Substantial Completion.

C. Certified List of Incomplete Items: Final submittal at Final Completion.

1.3 CLOSEOUT SUBMITTALS

A. Certificates of Release: From authorities having jurisdiction.

B. Certificate of Insurance: For continuing coverage.

C. Field Report: For pest control inspection.

1.4 MAINTENANCE MATERIAL SUBMITTALS

A. Schedule of Maintenance Material Items: For maintenance material submittal items specified in other Sections.

1.5 SUBSTANTIAL COMPLETION PROCEDURES

A. Contractor's List of Incomplete Items: Prepare and submit a list of items to be completed and corrected (Contractor's punch list), indicating the value of each item on the list and reasons why the Work is incomplete.

B. Submittals Prior to Substantial Completion: Complete the following a minimum of ten days prior to requesting inspection for determining date of Substantial Completion. List items below that are incomplete at time of request.
   1. Certificates of Release: Obtain and submit releases from authorities having jurisdiction permitting Owner unrestricted use of the Work and access to services and utilities. Include occupancy permits, operating certificates, and similar releases.
   2. Submit closeout submittals specified in other Division 01 Sections, including project record documents, operation and maintenance manuals, final completion construction photographic documentation, damage or settlement surveys, property surveys, and similar final record information.
   3. Submit closeout submittals specified in individual Sections, including specific warranties, workmanship bonds, maintenance service agreements, final certifications, and similar documents.
   4. Submit maintenance material submittals specified in individual Sections, including tools, spare parts, extra materials, keys and keying schedule, and similar items, and deliver to location designated by Architect. Label with manufacturer's name and model number where applicable.
   5. Submit test/adjust/balance records.
   6. List of subcontractors, service organizations, and principal vendors, including names, addresses, and telephone numbers where they can be reached for emergency service at all times, including nights, weekends, and holidays.
   7. Submit changeover information related to Owner's occupancy, use, operation, and maintenance.

C. Procedures Prior to Substantial Completion: Complete the following a minimum of ten days prior to requesting inspection for determining date of Substantial Completion. List items below that are incomplete at time of request.
   1. Advise Owner of pending insurance changeover requirements.
   2. Make final changeover of permanent locks and deliver keys to Owner. Advise Owner's personnel of changeover in security provisions.
   3. Complete startup and testing of systems and equipment.
   4. Perform preventive maintenance on equipment used prior to Substantial Completion.
   5. Instruct Owner's personnel in operation, adjustment, and maintenance of products, equipment, and systems. Submit demonstration and training video recordings specified in Section 017900 "Demonstration and Training."
   6. Advise Owner of changeover in heat and other utilities.
   7. Participate with Owner in conducting inspection and walkthrough with local emergency responders.
   8. Terminate and remove temporary facilities from Project site, along with mockups, construction tools, and similar elements.
   9. Complete final cleaning requirements, including touchup painting.
   10. Touch up and otherwise repair and restore marred exposed finishes to eliminate visual defects.

D. Inspection: Submit a written request for inspection to determine Substantial Completion a minimum of ten days prior to date the work will be completed and ready for final inspection and tests. On receipt of request, Architect will either proceed with inspection or notify

Contractor of unfulfilled requirements. Architect will prepare the Certificate of Substantial Completion after inspection or will notify Contractor of items, either on Contractor's list or additional items identified by Architect, that must be completed or corrected before certificate will be issued.

1. Reinspection: Request reinspection when the Work identified in previous inspections as incomplete is completed or corrected.
2. Results of completed inspection will form the basis of requirements for final completion.

1.6 FINAL COMPLETION PROCEDURES

A. Preliminary Procedures: Before requesting final inspection for determining final completion, complete the following:
   1. Submit a final Application for Payment according to Section 012900 "Payment Procedures."
   2. Certified List of Incomplete Items: Submit certified copy of Architect's Substantial Completion inspection list of items to be completed or corrected (punch list), endorsed and dated by Architect. Certified copy of the list shall state that each item has been completed or otherwise resolved for acceptance.
   3. Certificate of Insurance: Submit evidence of final, continuing insurance coverage complying with insurance requirements.
   4. Submit pest-control final inspection report and warranty.
   5. Instruct Owner's personnel in operation, adjustment, and maintenance of products, equipment, and systems. Submit demonstration and training video recordings.

B. Inspection: Submit a written request for final inspection to determine acceptance. On receipt of request, Architect will either proceed with inspection or notify Contractor of unfulfilled requirements. Architect will prepare a final Certificate for Payment after inspection or will notify Contractor of construction that must be completed or corrected before certificate will be issued.
   1. Reinspection: Request reinspection when the Work identified in previous inspections as incomplete is completed or corrected.

1.7 LIST OF INCOMPLETE ITEMS (PUNCH LIST)

A. Organization of List: Include name and identification of each space and area affected by construction operations for incomplete items and items needing correction including, if necessary, areas disturbed by Contractor that are outside the limits of construction.
   1. Organize list of spaces in sequential order, starting with exterior areas first and proceeding from lowest floor to highest floor.
   2. Organize items applying to each space by major element, including categories for ceiling, individual walls, floors, equipment, and building systems.
   3. Submit list of incomplete items in the following format:
      a. Three paper copies unless otherwise indicated. Architect will return one copy.

1.8 SUBMITTAL OF PROJECT WARRANTIES

A. Time of Submittal: Submit written warranties on request of Architect for designated portions of the Work where commencement of warranties other than date of Substantial Completion is indicated, or when delay in submittal of warranties might limit Owner's rights under warranty.

B. Organize warranty documents into an orderly sequence based on the table of contents of the Project Manual.
   1. Bind warranties and bonds in heavy-duty, three-ring, vinyl-covered, loose-leaf binders, thickness as necessary to accommodate contents, and sized to receive 8-1/2-by-11-inch paper.
   2. Provide heavy paper dividers with plastic-covered tabs for each separate warranty. Mark tab to identify the product or installation. Provide a typed description of the product or installation, including the name of the product and the name, address, and telephone number of Installer.
   3. Identify each binder on the front and spine with the typed or printed title "WARRANTIES," Project name, and name of Contractor.
   4. Warranty Electronic File: Scan warranties and bonds and assemble complete warranty and bond submittal package into a single indexed electronic PDF file with links enabling navigation to each item. Provide bookmarked table of contents at beginning of document.

C. Provide additional copies of each warranty to include in operation and maintenance manuals.

PART 2 - PRODUCTS

2.1 MATERIALS

A. Cleaning Agents: Use cleaning materials and agents recommended by manufacturer or fabricator of the surface to be cleaned. Do not use cleaning agents that are potentially hazardous to health or property or that might damage finished surfaces.
   1. Use cleaning products that comply with Green Seal's GS-37, or if GS-37 is not applicable, use products that comply with the California Code of Regulations maximum allowable VOC levels.

PART 3 - EXECUTION

3.1 FINAL CLEANING

A. General: Perform final cleaning. Conduct cleaning and waste-removal operations to comply with local laws and ordinances and Federal and local environmental and antipollution regulations.

B. Cleaning: Employ experienced workers or professional cleaners for final cleaning. Clean each surface or unit to condition expected in an average commercial building cleaning and maintenance program. Comply with manufacturer's written instructions.
   1. Complete the following cleaning operations before requesting inspection for certification of Substantial Completion for entire Project or for a designated portion of Project:

a. Clean Project site, yard, and grounds, in areas disturbed by construction activities, including landscape development areas, of rubbish, waste material, litter, and other foreign substances.
b. Sweep paved areas broom clean. Remove petrochemical spills, stains, and other foreign deposits.
c. Rake grounds that are neither planted nor paved to a smooth, even-textured surface.
d. Remove tools, construction equipment, machinery, and surplus material from Project site.
e. Remove snow and ice to provide safe access to building.
f. Clean exposed exterior and interior hard-surfaced finishes to a dirt-free condition, free of stains, films, and similar foreign substances. Avoid disturbing natural weathering of exterior surfaces. Restore reflective surfaces to their original condition.
g. Remove debris and surface dust from limited access spaces, including roofs, plenums, shafts, trenches, equipment vaults, manholes, attics, and similar spaces.
h. Sweep concrete floors broom clean in unoccupied spaces.
i. Vacuum carpet and similar soft surfaces, removing debris and excess nap; clean according to manufacturer's recommendations if visible soil or stains remain.
j. Clean transparent materials, including mirrors and glass in doors and windows. Remove glazing compounds and other noticeable, vision-obscuring materials. Replace chipped or broken glass and other damaged transparent materials. Polish mirrors and glass, taking care not to scratch surfaces.
k. Remove labels that are not permanent.
l. Wipe surfaces of mechanical and electrical equipment, elevator equipment, and similar equipment. Remove excess lubrication, paint and mortar droppings, and other foreign substances.
m. Clean plumbing fixtures to a sanitary condition, free of stains, including stains resulting from water exposure.
n. Replace disposable air filters and clean permanent air filters. Clean exposed surfaces of diffusers, registers, and grills.
o. Clean light fixtures, lamps, globes, and reflectors to function with full efficiency.
p. Leave Project clean and ready for occupancy.

C. Pest Control: Comply with pest control requirements in Section 015000 "Temporary Facilities and Controls." Prepare written report.

3.2 REPAIR OF THE WORK

A. Complete repair and restoration operations before requesting inspection for determination of Substantial Completion.

B. Repair or remove and replace defective construction. Repairing includes replacing defective parts, refinishing damaged surfaces, touching up with matching materials, and properly adjusting operating equipment. Where damaged or worn items cannot be repaired or restored, provide replacements. Remove and replace operating components that

cannot be repaired. Restore damaged construction and permanent facilities used during construction to specified condition.

1. Remove and replace chipped, scratched, and broken glass, reflective surfaces, and other damaged transparent materials.
2. Touch up and otherwise repair and restore marred or exposed finishes and surfaces. Replace finishes and surfaces that that already show evidence of repair or restoration.
   a. Do not paint over "UL" and other required labels and identification, including mechanical and electrical nameplates. Remove paint applied to required labels and identification.
3. Replace parts subject to operating conditions during construction that may impede operation or reduce longevity.
4. Replace burned-out bulbs, bulbs noticeably dimmed by hours of use, and defective and noisy starters in fluorescent and mercury vapor fixtures to comply with requirements for new fixtures.

END OF SECTION 017700

SECTION 017823 - OPERATION AND MAINTENANCE DATA

PART 1 - GENERAL

1.1 SUMMARY

A. Section includes administrative and procedural requirements for preparing operation and maintenance manuals, including the following:
   1. Operation and maintenance documentation directory.
   2. Emergency manuals.
   3. Operation manuals for systems, subsystems, and equipment.
   4. Product maintenance manuals.
   5. Systems and equipment maintenance manuals.

1.2 CLOSEOUT SUBMITTALS

A. Manual Content: Operations and maintenance manual content is specified in individual Specification Sections to be reviewed at the time of Section submittals. Submit reviewed manual content formatted and organized as required by this Section.
   1. Architect will comment on whether content of operations and maintenance submittals are acceptable.
   2. Where applicable, clarify and update reviewed manual content to correspond to revisions and field conditions.

B. Format: Submit operations and maintenance manuals in the following formats:
   1. PDF electronic file. Assemble each manual into a composite electronically indexed file. Submit on digital media acceptable to Architect.
      a. Name each indexed document file in composite electronic index with applicable item name. Include a complete electronically linked operation and maintenance directory.
      b. Enable inserted reviewer comments on draft submittals.
   2. Three paper copies. Include a complete operation and maintenance directory. Enclose title pages and directories in clear plastic sleeves. Architect will return zero copies.

C. Manual Submittal: Submit each manual in final form prior to requesting inspection for Substantial Completion and at least 15 days before commencing demonstration and training. Architect will return copy with comments.
   1. Correct or revise each manual to comply with Architect's comments. Submit copies of each corrected manual within 15 days of receipt of Architect's comments and prior to commencing demonstration and training.

PART 2 - PRODUCTS

2.1 REQUIREMENTS FOR EMERGENCY, OPERATION, AND MAINTENANCE MANUALS

A. Directory: Prepare a single, comprehensive directory of emergency, operation, and maintenance data and materials, listing items and their location to facilitate ready access to desired information.

B. Organization: Unless otherwise indicated, organize each manual into a separate section for each system and subsystem, and a separate section for each piece of equipment not part of a system. Each manual shall contain the following materials, in the order listed:
   1. Title page.
   2. Table of contents.
   3. Manual contents.

C. Title Page: Include the following information:
   1. Subject matter included in manual.
   2. Name and address of Project.
   3. Name and address of Owner.
   4. Date of submittal.
   5. Name and contact information for Contractor.
   6. Name and contact information for Construction Manager.
   7. Name and contact information for Architect.
   8. Name and contact information for Commissioning Authority.
   9. Names and contact information for major consultants to the Architect that designed the systems contained in the manuals.
   10. Cross-reference to related systems in other operation and maintenance manuals.

D. Table of Contents: List each product included in manual, identified by product name, indexed to the content of the volume, and cross-referenced to Specification Section number in Project Manual.

E. Manual Contents: Organize into sets of manageable size. Arrange contents alphabetically by system, subsystem, and equipment. If possible, assemble instructions for subsystems, equipment, and components of one system into a single binder.

F. Manuals, Electronic Files: Submit manuals in the form of a multiple file composite electronic PDF file for each manual type required.
   1. Electronic Files: Use electronic files prepared by manufacturer where available. Where scanning of paper documents is required, configure scanned file for minimum readable file size.
   2. File Names and Bookmarks: Enable bookmarking of individual documents based on file names. Name document files to correspond to system, subsystem, and equipment names used in manual directory and table of contents. Group documents for each system and subsystem into individual composite bookmarked files, then create composite manual, so that resulting bookmarks reflect the system, subsystem, and equipment names in a readily navigated file tree. Configure electronic manual to display bookmark panel on opening file.

G. Manuals, Paper Copy: Submit manuals in the form of hard copy, bound and labeled volumes.
   1. Binders: Heavy-duty, three-ring, vinyl-covered, loose-leaf binders, in thickness necessary to accommodate contents, sized to hold 8-1/2-by-11-inch paper; with clear plastic sleeve on spine to hold label describing contents and with pockets inside covers to hold folded oversize sheets.
      a. Identify each binder on front and spine, with printed title "OPERATION AND MAINTENANCE MANUAL," Project title or name, and subject matter of contents, and indicate

Specification Section number on bottom of spine. Indicate volume number for multiple-volume sets.

2. Dividers: Heavy-paper dividers with plastic-covered tabs for each section of the manual. Mark each tab to indicate contents. Include typed list of products and major components of equipment included in the section on each divider, cross-referenced to Specification Section number and title of Project Manual.
3. Protective Plastic Sleeves: Transparent plastic sleeves designed to enclose diagnostic software storage media for computerized electronic equipment.
4. Drawings: Attach reinforced, punched binder tabs on drawings and bind with text.
   a. If oversize drawings are necessary, fold drawings to same size as text pages and use as foldouts.
   b. If drawings are too large to be used as foldouts, fold and place drawings in labeled envelopes and bind envelopes in rear of manual. At appropriate locations in manual, insert typewritten pages indicating drawing titles, descriptions of contents, and drawing locations.

2.2 EMERGENCY MANUALS

A. Content: Organize manual into a separate section for each of the following:
   1. Type of emergency.
   2. Emergency instructions.
   3. Emergency procedures.

B. Type of Emergency: Where applicable for each type of emergency indicated below, include instructions and procedures for each system, subsystem, piece of equipment, and component:
   1. Fire.
   2. Flood.
   3. Gas leak.
   4. Water leak.
   5. Power failure.
   6. Water outage.
   7. System, subsystem, or equipment failure.
   8. Chemical release or spill.

C. Emergency Instructions: Describe and explain warnings, trouble indications, error messages, and similar codes and signals. Include responsibilities of Owner's operating personnel for notification of Installer, supplier, and manufacturer to maintain warranties.

D. Emergency Procedures: Include the following, as applicable:
   1. Instructions on stopping.
   2. Shutdown instructions for each type of emergency.
   3. Operating instructions for conditions outside normal operating limits.
   4. Required sequences for electric or electronic systems.
   5. Special operating instructions and procedures.

2.3 OPERATION MANUALS

A. Content: In addition to requirements in this Section, include operation data required in individual Specification Sections and the following information:
   1. System, subsystem, and equipment descriptions. Use designations for systems and equipment indicated on Contract Documents.
   2. Performance and design criteria if Contractor is delegated design responsibility.
   3. Operating standards.
   4. Operating procedures.
   5. Operating logs.
   6. Wiring diagrams.
   7. Control diagrams.
   8. Piped system diagrams.
   9. Precautions against improper use.
   10. License requirements including inspection and renewal dates.

B. Descriptions: Include the following:
   1. Product name and model number. Use designations for products indicated on Contract Documents.
   2. Manufacturer's name.
   3. Equipment identification with serial number of each component.
   4. Equipment function.
   5. Operating characteristics.
   6. Limiting conditions.
   7. Performance curves.
   8. Engineering data and tests.
   9. Complete nomenclature and number of replacement parts.

C. Operating Procedures: Include the following, as applicable:
   1. Startup procedures.
   2. Equipment or system break-in procedures.
   3. Routine and normal operating instructions.
   4. Regulation and control procedures.
   5. Instructions on stopping.
   6. Normal shutdown instructions.
   7. Seasonal and weekend operating instructions.
   8. Required sequences for electric or electronic systems.
   9. Special operating instructions and procedures.

D. Systems and Equipment Controls: Describe the sequence of operation, and diagram controls as installed.

E. Piped Systems: Diagram piping as installed, and identify color-coding where required for identification.

2.4 PRODUCT MAINTENANCE MANUALS

A. Content: Organize manual into a separate section for each product, material, and finish. Include source information, product information, maintenance procedures, repair materials and sources, and warranties and bonds, as described below.

B. Source Information: List each product included in manual, identified by product name and arranged to match manual's table of contents. For

each product, list name, address, and telephone number of Installer or supplier and maintenance service agent, and cross-reference Specification Section number and title in Project Manual.

C. Product Information: Include the following, as applicable:
   1. Product name and model number.
   2. Manufacturer's name.
   3. Color, pattern, and texture.
   4. Material and chemical composition.
   5. Reordering information for specially manufactured products.

D. Maintenance Procedures: Include manufacturer's written recommendations and the following:
   1. Inspection procedures.
   2. Types of cleaning agents to be used and methods of cleaning.
   3. List of cleaning agents and methods of cleaning detrimental to product.
   4. Schedule for routine cleaning and maintenance.
   5. Repair instructions.

E. Repair Materials and Sources: Include lists of materials and local sources of materials and related services.

F. Warranties and Bonds: Include copies of warranties and bonds and lists of circumstances and conditions that would affect validity of warranties or bonds.

2.5 SYSTEMS AND EQUIPMENT MAINTENANCE MANUALS

A. Content: For each system, subsystem, and piece of equipment not part of a system, include source information, manufacturers' maintenance documentation, maintenance procedures, maintenance and service schedules, spare parts list and source information, maintenance service contracts, and warranty and bond information, as described below.

B. Source Information: List each system, subsystem, and piece of equipment included in manual, identified by product name and arranged to match manual's table of contents. For each product, list name, address, and telephone number of Installer or supplier and maintenance service agent, and cross-reference Specification Section number and title in Project Manual.

C. Manufacturers' Maintenance Documentation: Manufacturers' maintenance documentation including the following information for each component part or piece of equipment:
   1. Standard maintenance instructions and bulletins.
   2. Drawings, diagrams, and instructions required for maintenance, including disassembly and component removal, replacement, and assembly.
   3. Identification and nomenclature of parts and components.
   4. List of items recommended to be stocked as spare parts.

D. Maintenance Procedures: Include the following information and items that detail essential maintenance procedures:
   1. Test and inspection instructions.

2. Troubleshooting guide.
3. Precautions against improper maintenance.
4. Disassembly; component removal, repair, and replacement; and reassembly instructions.
5. Aligning, adjusting, and checking instructions.
6. Demonstration and training video recording, if available.

E. Maintenance and Service Schedules: Include service and lubrication requirements, list of required lubricants for equipment, and separate schedules for preventive and routine maintenance and service with standard time allotment.

F. Spare Parts List and Source Information: Include lists of replacement and repair parts, with parts identified and cross-referenced to manufacturers' maintenance documentation and local sources of maintenance materials and related services.

G. Maintenance Service Contracts: Include copies of maintenance agreements with name and telephone number of service agent.

H. Warranties and Bonds: Include copies of warranties and bonds and lists of circumstances and conditions that would affect validity of warranties or bonds.

PART 3 - EXECUTION

3.1 MANUAL PREPARATION

A. Emergency Manual: Assemble a complete set of emergency information indicating procedures for use by emergency personnel and by Owner's operating personnel for types of emergencies indicated.

B. Product Maintenance Manual: Assemble a complete set of maintenance data indicating care and maintenance of each product, material, and finish incorporated into the Work.

C. Operation and Maintenance Manuals: Assemble a complete set of operation and maintenance data indicating operation and maintenance of each system, subsystem, and piece of equipment not part of a system.

D. Manufacturers' Data: Where manuals contain manufacturers' standard printed data, include only sheets pertinent to product or component installed. Mark each sheet to identify each product or component incorporated into the Work. If data include more than one item in a tabular format, identify each item using appropriate references from the Contract Documents. Identify data applicable to the Work and delete references to information not applicable.

E. Drawings: Prepare drawings supplementing manufacturers' printed data to illustrate the relationship of component parts of equipment and systems and to illustrate control sequence and flow diagrams. Coordinate these drawings with information contained in record Drawings to ensure correct illustration of completed installation.
1. Do not use original project record documents as part of operation and maintenance manuals.

F. Comply with Section 017700 "Closeout Procedures" for schedule for submitting operation and maintenance documentation.

END OF SECTION 017823

SECTION 017839 - PROJECT RECORD DOCUMENTS

PART 1 - GENERAL

1.1 SUMMARY

A. Section includes administrative and procedural requirements for project record documents, including the following:
   1. Record Drawings.
   2. Record Specifications.
   3. Record Product Data.

B. Related Requirements:
   1. Section 017823 "Operation and Maintenance Data" for operation and maintenance manual requirements.

1.2 CLOSEOUT SUBMITTALS

A. Record Drawings: Comply with the following:
   1. Number of Copies: Submit one set of marked-up record prints.
   2. Number of Copies: Submit copies of record Drawings as follows:
      a. Initial Submittal:
         1) Submit one paper-copy set of marked-up record prints.
         2) Architect will indicate whether general scope of changes, additional information recorded, and quality of drafting are acceptable.
      b. Final Submittal:
         1) Submit three paper-copy sets of marked-up record prints.
         2) Submit PDF electronic files of scanned record prints and three sets of prints.
         3) Print each drawing, whether or not changes and additional information were recorded.

B. Record Specifications: Submit one paper copy and one annotated PDF electronic files of Project's Specifications, including addenda and contract modifications.

C. Record Product Data: Submit one paper copy and annotated PDF electronic files and directories of each submittal.

PART 2 - PRODUCTS

2.1 RECORD DRAWINGS

A. Record Prints: Maintain one set of marked-up paper copies of the Contract Drawings and Shop Drawings, incorporating new and revised Drawings as modifications are issued.
   1. Preparation: Mark record prints to show the actual installation where installation varies from that shown originally. Require individual or entity who obtained record data, whether individual or entity is Installer, subcontractor, or similar entity, to provide information for preparation of corresponding marked-up record prints.

a. Give particular attention to information on concealed elements that would be difficult to identify or measure and record later.
b. Record data as soon as possible after obtaining it.
c. Record and check the markup before enclosing concealed installations.

2. Mark the Contract Drawings and Shop Drawings completely and accurately. Use personnel proficient at recording graphic information in production of marked-up record prints.
3. Mark record sets with erasable, red-colored pencil. Use other colors to distinguish between changes for different categories of the Work at same location.
4. Note Construction Change Directive numbers, alternate numbers, Change Order numbers, and similar identification, where applicable.

B. Format: Identify and date each record Drawing; include the designation "PROJECT RECORD DRAWING" in a prominent location.
1. Record Prints: Organize record prints and newly prepared record Drawings into manageable sets. Bind each set with durable paper cover sheets. Include identification on cover sheets.
2. Format: Annotated PDF electronic file.
3. Identification: As follows:
a. Project name.
b. Date.
c. Designation "PROJECT RECORD DRAWINGS."
d. Name of Architect.
e. Name of Contractor.

2.2 RECORD SPECIFICATIONS

A. Preparation: Mark Specifications to indicate the actual product installation where installation varies from that indicated in Specifications, addenda, and contract modifications.
1. Give particular attention to information on concealed products and installations that cannot be readily identified and recorded later.
2. Mark copy with the proprietary name and model number of products, materials, and equipment furnished, including substitutions and product options selected.
3. Record the name of manufacturer, supplier, Installer, and other information necessary to provide a record of selections made.
4. Note related Change Orders, record Product Data, and record Drawings where applicable.

B. Format: Submit record Specifications as paper copy and scanned PDF electronic file(s) of marked-up paper copy of Specifications.

2.3 RECORD PRODUCT DATA

A. Preparation: Mark Product Data to indicate the actual product installation where installation varies substantially from that indicated in Product Data submittal.
1. Give particular attention to information on concealed products and installations that cannot be readily identified and recorded later.

2. Include significant changes in the product delivered to Project site and changes in manufacturer's written instructions for installation.
3. Note related Change Orders, record Specifications, and record Drawings where applicable.

B. Format: Submit record Product Data as paper copy and scanned PDF electronic file(s) of marked-up paper copy of Product Data.

PART 3 - EXECUTION

3.1 RECORDING AND MAINTENANCE

A. Recording: Maintain one copy of each submittal during the construction period for project record document purposes. Post changes and revisions to project record documents as they occur; do not wait until end of Project.

B. Maintenance of Record Documents and Samples: Store record documents and Samples in the field office apart from the Contract Documents used for construction. Do not use project record documents for construction purposes. Maintain record documents in good order and in a clean, dry, legible condition, protected from deterioration and loss. Provide access to project record documents for Architect's and Construction Manager's reference during normal working hours.

END OF SECTION 017839

SECTION 017900 - DEMONSTRATION AND TRAINING

PART 1 - GENERAL

1.1 SUMMARY

A. Section includes administrative and procedural requirements for instructing Owner's personnel, including the following:
   1. Demonstration of operation of systems, subsystems, and equipment.
   2. Training in operation and maintenance of systems, subsystems, and equipment.
   3. Demonstration and training video recordings.

1.2 INFORMATIONAL SUBMITTALS

A. Instruction Program: Submit outline of instructional program for demonstration and training, including a list of training modules and a schedule of proposed dates, times, length of instruction time, and instructors' names for each training module. Include learning objective and outline for each training module.
   1. Indicate proposed training modules using manufacturer-produced demonstration and training video recordings for systems, equipment, and products in lieu of video recording of live instructional module.

1.3 CLOSEOUT SUBMITTALS

A. Demonstration and Training Video Recordings: Submit two copies within seven days of end of each training module.
   1. At completion of training, submit complete training manual(s) for Owner's use prepared and bound in format matching operation and maintenance manuals and in PDF electronic file format on compact disc.

1.4 QUALITY ASSURANCE

A. Facilitator Qualifications: A firm or individual experienced in training or educating maintenance personnel in a training program similar in content and extent to that indicated for this Project, and whose work has resulted in training or education with a record of successful learning performance.

B. Instructor Qualifications: A factory-authorized service representative, complying with requirements in Section 014000 "Quality Requirements," experienced in operation and maintenance procedures and training.

1.5 COORDINATION

A. Coordinate instruction schedule with Owner's operations. Adjust schedule as required to minimize disrupting Owner's operations and to ensure availability of Owner's personnel.

B. Coordinate content of training modules with content of approved emergency, operation, and maintenance manuals. Do not submit

instruction program until operation and maintenance data has been reviewed and approved by Architect.

PART 2 - PRODUCTS

2.1 INSTRUCTION PROGRAM

A. Program Structure: Develop an instruction program that includes individual training modules for each system and for equipment not part of a system, as required by individual Specification Sections.

B. Training Modules: Develop a learning objective and teaching outline for each module. Include a description of specific skills and knowledge that participant is expected to master. For each module, include instruction for the following as applicable to the system, equipment, or component:
   1. Basis of System Design, Operational Requirements, and Criteria: Include the following:
      a. System, subsystem, and equipment descriptions.
      b. Performance and design criteria if Contractor is delegated design responsibility.
      c. Operating standards.
      d. Regulatory requirements.
      e. Equipment function.
      f. Operating characteristics.
      g. Limiting conditions.
      h. Performance curves.
   2. Documentation: Review the following items in detail:
      a. Emergency manuals.
      b. Operations manuals.
      c. Maintenance manuals.
      d. Project record documents.
      e. Identification systems.
      f. Warranties and bonds.
      g. Maintenance service agreements and similar continuing commitments.
   3. Emergencies: Include the following, as applicable:
      a. Instructions on meaning of warnings, trouble indications, and error messages.
      b. Instructions on stopping.
      c. Shutdown instructions for each type of emergency.
      d. Operating instructions for conditions outside of normal operating limits.
      e. Sequences for electric or electronic systems.
      f. Special operating instructions and procedures.
   4. Operations: Include the following, as applicable:
      a. Startup procedures.
      b. Equipment or system break-in procedures.
      c. Routine and normal operating instructions.
      d. Regulation and control procedures.
      e. Control sequences.
      f. Safety procedures.
      g. Instructions on stopping.
      h. Normal shutdown instructions.
      i. Operating procedures for emergencies.

j. Operating procedures for system, subsystem, or equipment failure.
k. Seasonal and weekend operating instructions.
l. Required sequences for electric or electronic systems.
m. Special operating instructions and procedures.

5. Adjustments: Include the following:
   a. Alignments.
   b. Checking adjustments.
   c. Noise and vibration adjustments.
   d. Economy and efficiency adjustments.
6. Troubleshooting: Include the following:
   a. Diagnostic instructions.
   b. Test and inspection procedures.
7. Maintenance: Include the following:
   a. Inspection procedures.
   b. Types of cleaning agents to be used and methods of cleaning.
   c. List of cleaning agents and methods of cleaning detrimental to product.
   d. Procedures for routine cleaning
   e. Procedures for preventive maintenance.
   f. Procedures for routine maintenance.
   g. Instruction on use of special tools.
8. Repairs: Include the following:
   a. Diagnosis instructions.
   b. Repair instructions.
   c. Disassembly; component removal, repair, and replacement; and reassembly instructions.
   d. Instructions for identifying parts and components.
   e. Review of spare parts needed for operation and maintenance.

PART 3 - EXECUTION

3.1 PREPARATION

A. Assemble educational materials necessary for instruction, including documentation and training module. Assemble training modules into a training manual organized in coordination with requirements in Section 017823 "Operation and Maintenance Data."

3.2 INSTRUCTION

A. Facilitator: Engage a qualified facilitator to prepare instruction program and training modules, to coordinate instructors, and to coordinate between Contractor and Owner for number of participants, instruction times, and location.

B. Engage qualified instructors to instruct Owner's personnel to adjust, operate, and maintain systems, subsystems, and equipment not part of a system.
   1. Architect will furnish an instructor to describe basis of system design, operational requirements, criteria, and regulatory requirements.
   2. Owner will furnish an instructor to describe Owner's operational philosophy.
   3. Owner will furnish Contractor with names and positions of participants.

C. Scheduling: Provide instruction at mutually agreed on times. For equipment that requires seasonal operation, provide similar instruction at start of each season.
   1. Schedule training with Owner with at least seven days' advance notice.

D. Training Location and Reference Material: Conduct training on-site in the completed and fully operational facility using the actual equipment in-place. Conduct training using final operation and maintenance data submittals.

E. Evaluation: At conclusion of each training module, assess and document each participant's mastery of module by use of a demonstration performance-based test.

3.3 DEMONSTRATION AND TRAINING VIDEO RECORDINGS

A. General: Engage a qualified commercial videographer to record demonstration and training video recordings. Record each training module separately. Include classroom instructions and demonstrations, board diagrams, and other visual aids, but not student practice.
   1. At beginning of each training module, record each chart containing learning objective and lesson outline.

B. Video Recording Format: Provide high-quality color video recordings with menu navigation in format acceptable to Architect.

END OF SECTION 017900

SECTION 02082 – ASBESTOS ABATEMENT:

PART 1 - GENERAL

1.1 WORK INCLUDES

A. Base Bid:

1. **General**: Asbestos Abatement (proper removal and disposal) of all Regulated Asbestos Containing Materials (RACM) and Category I Non Friable ACM in the Glen Oak Pavilion Administration Building located at 2218 N. Prospect, Peoria, Illinois. This work will be performed in 1 Phase and includes full containment removal of asbestos-containing materials as indicated on the attached drawings and notes.

   a. The Asbestos abatement work will be performed in one (1) phase. Refer to Division 0 and coordinate with the General Contractor (GC) for Asbestos Abatement and future renovation work. The Asbestos Abatement Contractor (AC) will have 15 work days for work in the building, including clearance air monitoring. Anticipated start date for the work is spring 2014.

   b. Asbestos Inspection and sample analysis results are available from OWNER.

   c. This specification was written expressly for use on this limited Asbestos Abatement Project only. Any form of reproduction of this specification section in part or its entirety for use on other projects, without McKee Environmental, Inc. (MEI) written permission is strictly forbidden. MEI shall in no way be held liable if this asbestos abatement specification section or portions of this specification section is reproduced without their expressed written consent.

2. Asbestos Abatement Contractor (AC) shall provide the following:

   a. The AC shall furnish all labor, materials and equipment necessary for and reasonably incidental to the completion of all abatement work, including transportation and proper disposal of all items of asbestos abatement services, insurance and facilities. All work is to be performed in accordance with this document, all applicable Illinois Department of Public Health (IDPH) Rules and Regulations for Asbestos Abatement for Public and Private Schools and Commercial and Public Buildings; EPA regulations, Asbestos- National Emission Standards for Hazardous Air Pollutants (NESHAP); and the Asbestos OSHA regulations, and other applicable Federal, State and Local Government Regulations. Several of the regulations are incorporated by reference in Section 1.3 in order to conduct adequate precautions against asbestos contaminant exposure to any person(s) or the environment. The AC shall complete proper removal and disposal of all Category I or materials that may become Regulated Asbestos Containing Materials (RACM) as described by the following:

   b. AC shall field verify locations, quantity and extent of ACM prior to bidding.

   c. AC shall coordinate with Owner and/or Owner's designated agent to verify shutdown of electrical and HVAC systems in the abatement areas.

   d. AC shall develop and submit a work schedule to be coordinated with Owner and General Contractor, (GC) prior to commencement of work.

   e. AC shall coordinate with Owner and/or Owner's designated agent to determine the location of the dumpsters to be used to dispose of the asbestos waste.

f. AC shall establish Regulated Area(s) for the work and place critical barriers and seals at all exterior openings (windows, doors, vent openings, etc.) and interior doorways (as necessary and applicable).

g. AC shall use clear removal bags to allow visual inspection of waste.

h. AC shall provide and maintain three-chambered decontamination unit(s) and provide and maintain security at all times to their work areas.

i. The AC shall perform gross (friable) removal of flooring materials (ceramic tile/mortar base and mastic). The AC shall construct and use negative pressure containments, using poly sheeting on all walls and ceilings. The AC shall maintain the containment under HEPA-filtered negative pressure, exhausted to the exterior of the building at all times during the gross removal work. Perform gross removal of flooring with appropriate respiratory protection and according to Part 1.1.A.2.a. (above).

j. AC shall provide the following:

1) Cleanup & disposal of asbestos containing materials & disposable equipment.

2) Regulatory notices as required and sign Waste Shipment Records.

3) Protection of persons and property.

4) Submit to Owner and Architect prior to commencement of work documentation from manufacturers' that any mastic remover and lock down encapsulant to be used are compatible with all replacement materials.

5) Signs and barrier tape necessary to demarcate Regulated Areas.

6) Work area preparation.

7) Temporary utilities (electricity & water) for asbestos abatement and workers.

8) Reestablish work areas.

k. AC shall submit copies of all licenses and certifications applicable to the abatement work to Owner prior to commencement of work.

l. AC shall maintain insurance requirements described by the Architect in other Specification Divisions, including at least $1,000,000.00 Pollution Liability with Asbestos Abatement Liability Coverage. The policy <u>must</u> be "occurrence - based" and be contracted with a firm licensed to sell insurance in Illinois. The liability coverage must be underwritten by a corporation with home office in the U.S. and incorporated under the statutes of one of the fifty states of the U.S. The AC shall provide a copy of its Certificate of Insurance naming Peoria Park District (OWNER), Apace Design Inc. & McKee Environmental, Inc. (MEI) as additional insured.

B. By Others:

1. By Industrial Hygienist (McKee Environmental, Inc.):

a. Perform required clearance air sampling and analysis where agreed to in writing with OWNER.

b. OWNER may elect to provide full time asbestos project management/air sampling professional (APM/ASP) services during all AC on site activities.

2. By General Contractor:

a. Perform removal of any fixed items (e.g., interior walls to base plate, counters, toilets, sinks, benches, fixtures, furniture, and equipment, etc.) in the work area as necessary prior to AC beginning.

3. By Owner:

   a. Perform its responsibilities in accord with referenced Parts of the Rules and Regulations. Arrange for independent Clearance Air Monitoring, where applicable following AC work.

   b. Provide for the removal of office equipment & supplies, etc., and any salvageable materials prior to abatement activities.

1.2 RELATED WORK

A. Specified elsewhere in Division 2 through 16.

1.3 REGULATORY REQUIREMENTS / REFERENCES

The CONTRACTOR shall comply, at a minimum, with the latest requirements of the following regulations governing proper asbestos removal and disposal.

A. Federal Requirements:

1. U.S. Environmental Protection Agency (USEPA) Asbestos National Emissions Standards for Hazardous Air Pollutants (NESHAP). 40 CFR 61, Subpart M.
2. U.S. Department of Labor – Occupational Safety and Health Administration (OSHA) Asbestos Regulations (Code of Federal Regulations Title 29, Part 1926, Section 1926.1101) and respiratory protection (29CFR 1910.134).
4. USEPA – Code of Federal Regulations Title 40, Part 763 Subpart G.
5. U.S. Department of Transportation, “Hazardous Substance Final Rule”, 49 CFR 171 and 172.

B. State Requirements:

1. IEPA – Illinois Environmental Protection Agency (NESHAP Administration & Coordination).
2. Illinois Department of Public Health Rules and Regulations for Asbestos Abatement for Public and Private Schools and Commercial and Public Buildings.

C. Other References and Requirements

1. Resilient Floor Covering Institute; RFCI, “Recommended Work Practices for Removal of Resilient Floor Coverings”.
2. ASTM, American Society for Testing and Materials; ANSI, American National Standards Institute (ANSI Z 9.2 Fundamental Governing the Design and Operations of Local Exhaust Systems); ULI, Underwriters Laboratories, Inc.; OSHA Regulations including OSHA 300 Log.

1.4 FIELD QUALITY CONTROL

A. AC shall provide OWNER:

1. OSHA Required Air monitoring results of own personnel. Provide a copy of all results within 24 hours after sampling.

3. Documentation that AC is licensed by IDPH for asbestos abatement activities.

4. Documented evidence that all workers are licensed as Abatement Workers by IDPH.

5. Documentation that at least one employee to be on-site at all times while abatement is being performed is licensed as an Asbestos Supervisor as required by IDPH.

6. **Respirators:** Submit a written standard operating procedure governing the selection, fit testing, cleaning, use and storage of respirators in accordance with 29 CFR 1926.1101 and as outlined in 29 CFR 1910.134.

7. **Medical Examination:** Submit proof that personnel that will be entering contaminated areas have received a medical examination by a licensed and qualified physician and furnish the results of physician's written authorization to wear respiratory protection. Comply with all Federal and State Regulations, including 29 CFR 1910.20 for access to employee exposure and medical records and their confidentiality.

1.5 SUBMITTALS AND NOTICES

A. Prior to Commencement of Work, AC shall:

1. Notify in writing of proposed asbestos work using appropriate form with copy to OWNER, The USEPA regional office, IEPA Division of Air Pollution Control and, if required, IDPH and OSHA regional office with jurisdiction over the State in which this project is located, not fewer than ten (10) working days before work commences on this project.

   a. USEPA Region V
      PAT GIMINO
      Regulation Development Branch
      Mail Code 5 ARD 26
      230 S. Dearborn St.
      Chicago, IL 60604
      (312) 353-2088

   b. IEPA – Illinois Environmental Protection Agency
      Dale Halford
      Division of Air Pollution
      P.O. Box 19276
      Springfield, IL 62794-9276
      (217) 785-1743

2. Submit proof satisfactory to the OWNER that all required permits, site location and arrangements for transport and disposal of asbestos-containing or contaminated materials, supplies, and the like have been obtained.

3. Submit documentation to OWNER indicating that all employees have had instruction on the hazards of asbestos exposures, on proper selection, use, fitting and cleaning of respirators, on protective clothing, on use of showers, on entry and exit from work areas, and on all aspects of work procedures and protective measures.

4. Submit documentation to OWNER showing that all employees engaged in asbestos activities have received appropriate medical examinations and Pulmonary Function Tests (PFT) to authorize wearing of respiratory protection that is signed by a licensed and

qualified physician within the last 12 months immediately proceeding the project startup. No worker will be allowed in the work area with expired documentation.

5. Public Warnings and Safety Information to be Posted and on site:

   a. Post all signs as required by 29 CFR 1926.1101and 29 CFR 1910.145 and any Local, State, or Federal regulations

   b. A copy of the USEPA Regulations for Asbestos (Code of Federal Regulations Title 40, Part 61, Subpart A and M) and a copy of USDOL – OSHA Asbestos Regulations (29 CFR 1926.1101 and 1910.1001) and respiratory protection (29CFR 1910.134).

   c. A list of phone numbers for the local hospital and/or emergency squad, local fire department, the institution's security office (if applicable), a representative of the building owner who may be reached 24 hours a day, the AC's Supervisor and Office phone numbers, and any other professional Consultants directly involved in the project.

6. Submit manufacturer's certification that vacuums, ventilation equipment, and other equipment required to contain asbestos fibers conform to ANSI Z 9.2.

1.6 PROTECTION

A. Provide appropriate protection for personnel, building, and environment in accordance with the Section 1.3 Regulatory Requirements / References and all other applicable Rules and Regulations.

1.7 PROJECT/SITE CONDITIONS

A. Refer to OWNER for Asbestos Inspection Summary Report of asbestos containing materials.

B. Lockout/tagout of existing electrical will be supplied by the CONTRACTOR.

C. CONTRACTOR shall be required to provide Temporary power and establish Ground Fault Circuit Interrupter Devices (i.e. GFCI protected circuits) for all lighting and equipment.

D. Provisions for water shall be the responsibility of the CONTRACTOR.

1.8 SEQUENCING/SCHEDULING

A. Coordinate with GC and submit a Construction Schedule. Perform all work in accord with approved schedule.

1.9 WARRANTY

A. Warrant all work in accord with General Conditions for a time period of one year.

PART 2 - PRODUCTS/EQUIPMENT

2.1 ASBESTOS ABATEMENT EQUIPMENT

A. Use only materials and equipment complying with State and Federal Rules and Regulations.

2.2 ACCEPTABLE MANUFACTURER/PRODUCTS

A. Wetting Agent:

1.	Better Working Environments	Super Wet
2.	Certified Technologies	Certane 2075
3.	Eppert Oil Co.	Speedi-Wet
4.	Foster Products Corp.	32-90

B. Combination Wetting Agent – Encapsulant:

1.	Better Working Environments	5100
2.	Certified Technologies	Certane 707
3.	Eppert Oil Co.	Fiber Seal
4.	Foster Products Corp.	32-60

C. Lockdown Encapsulant:

1.	Better Working Environments	3100
2.	Certified Technologies	Certane 1050
3.	Eppert Oil Co.	Fiber-Seal
4.	Foster Products corp.	32-60

D. Mastic Removal (**NOTE**: Mastic removers must have a flash point greater than 200 F and lower explosive limit greater than 5%). AC shall

1. Submit product information sheet and MSD sheet for proposed mastic removers for review. Product data submitted must be for the material used on project site.
2. Use mastic remover manufacturer's recommended procedures and materials to thoroughly clean floor surfaces after mastic removal. Coordinate with Architect & Flooring Contractor.

PART 3 - EXECUTION

3.1 PREPARATION FOR GROSS REMOVAL

A. Perform all preparation work in accord with applicable referenced parts of the IDPH, OSHA and IEPA Rules and Regulations.

B. Establish a Regulated Area

1. Thoroughly pre-clean the entire regulated area including movable and immovable objects using HEPA filtered vacuums and wet methods.
2. Shut down ventilation to work areas where required and seal vents with two layers of 6-mil plastic sheeting and tape.
3. Seal all openings including windows and doorways between work area and other areas not necessary for entry with a minimum of one layer of 6-mil plastic sheeting and duct tape.
4. Cover walls with a minimum of one layer of 4-mil plastic sheeting and cover floors not being abated with a minimum of one layer of 6-mil plastic sheeting.
5. Cover immovable objects within the work area with a minimum of one layer of 6-mil plastic sheeting.
6. Deactivate electrical circuits in the enclosure and bring power into the work area from outside sources protected by ground fault circuit interrupters at the source.
7. Establish adequate HEPA filtered exhaust system in the area of work.
8. Install appropriate warning signs.
9. Install a decontamination unit attached to the work area. The decontamination unit to contain:
   a. An equipment room with two curtained doorways, one to the work area and one to the shower room
   b. A shower room with two curtained doorways, one to the equipment room and one to the clean room. Shower room shall contain at least one shower with hot and cold running water. Careful attention shall be paid to the shower enclosure to ensure against leaking of any kind. Ensure a supply of soap at all time in the shower room. Shower water shall be filtered to remove asbestos prior to being discharged to sanitary sewer drain or barrel.
   c. A Clean room with one curtained doorway into the shower and one entrance or exit to non-contaminated areas of the building. Clean room shall have sufficient space for proper storage of worker's street clothes, towels, and other non-contaminated items. Clean room shall also store fresh, non-contaminated protective clothing, respirators, and any other accessory to be used by workers in the work area.
   d. Provide cascaded filtered units on drain lines from showers or any other water source carrying asbestos-contaminated water from the work area. Final filter to filter all particles 5 microns and larger.
   e. A portable decontamination unit may be used.
10. Asbestos abatement shall not commence until:
    a. Arrangements have been made for disposal of waste at an approved landfill.
    b. Arrangements have been made for containing and disposal of wastewater resulting from wet stripping.

c. Work areas and decontamination enclosure systems and parts of the building required to remain in use or not abated are effectively segregated.

d. Tools, equipment and material waste receptors are on site.

e. Arrangements have been made for building security.

f. Preparatory steps have been taken and applicable notices posted and permits obtained.

g. Negative air systems are installed and operating according to regulation.

3.2 PERFORMANCE OF GROSS REMOVAL

A. Perform all asbestos gross removal work in accord with applicable referenced Parts of the Rules and Regulations.

B. Utilize drop-cloths and spray asbestos material with amended water, using spray equipment capable of proving a “mist” application to reduce the release of fibers. Saturate the material sufficiently to wet it to the substrate without causing excess dripping or delamination of the material. Spray the asbestos material repeatedly during the work process to maintain wet condition and minimize asbestos fiber dispersion.

C. Remove the saturated asbestos material in a manner judged to be most efficient. Removal shall be thorough and complete to the base surface. The saturated asbestos materials shall be packed in sealable plastic bags or barrels and placed in labeled containers for transport. Materials shall not be allowed to dry out prior to insertion into the containers.

D. Seal filled containers. Clean external surfaces of containers thoroughly by wet wiping methods in the designated area of the work area, which is part of the equipment decontamination enclosure system. Move containers to washroom, wet clean each container thoroughly, and move to holding area pending removal to uncontaminated areas. Ensure that containers are removed from the holding area by workers who have entered from uncontaminated areas dressed in clean coveralls. Ensure that workers do not enter from uncontaminated areas into the washroom or the work area; ensure that contaminated workers do not exit the work area through the equipment decontamination enclosure system.

E. After completion of stripping work, all exposed and accessible surfaces shall be HEPA filtered vacuumed to remove residual asbestos materials. In areas where stripping of asbestos materials from a hard substrate is performed, all surfaces from which asbestos has been removed shall be brushed (wire or nylon), or wet wiped to remove all visible material. During all phases of this work, the surfaces being cleaned shall be kept wet. Repeated cleaning by HEPA vacuuming and wet wiping will be completed until all surfaces are free of ACM. All standing water, dropcloths and removed and containerized ACM shall be removed from the work area by the end of the work day and transported to appropriate truck or dumpster for disposal.

F. Disposal:

1. Label all bags or containers containing asbestos debris with a label as follows:

Peoria Park District
Glen Oak Park Pavilion Administration Building
2218 N. Prospect
Peoria, IL 61603

2. Whenever trucks or dumpsters are being loaded or unloaded with asbestos waste, post signs in accord with the 1990 NESHAP STANDARD-DANGER, ASBESTOS DUST HAZARD, CANCER AND LUNG DISEASE HAZARD, AUTHORIZED PERSONNEL ONLY.

3. Transport all waste to an IEPA approved landfill. Complete a waste shipment record for each load of waste in accord with the 1990 NESHAP STANDARD. Return the record, signed by waste disposal site owner/operator to OWNER.

3.3 Cleanup:

A. Perform all cleanup operations in accord with referenced parts of the Abatement Act, Subpart D.

1. Cleanup Procedures
2. Equipment and Waste Container Removal Procedures
3. Clearance Air Monitoring and Analysis
4. Disposal Procedures

3.4 Field Quality Control

A. The Contractor shall provide air monitoring as necessary to comply with OSHA.

B. When applicable, the Consultant will employ and pay for an approved Testing Laboratory to perform air testing of inside containment areas in accord with the Abatement Act, Part 855.170. The Asbestos Abatement Contractor shall pay any additional costs, which arise from failure of air testing results (or inconclusive results from particulate overloading, etc.) and may include costs for services of APM, ASP, laboratory, for Consultant.

C. The OWNER will retain full-time IDPH Licensed Asbestos Project Manager (APM) services on the site at all times during the performance of all asbestos contractor activities.

D. The OWNER will retain an Air Sampling Professional on the site to perform air sampling during the performance of all asbestos contractor activities. Subject to the APM's approval, the person may be IDPH licensed as both an APM and ASP and perform the combined duties.

3.5 Clearance Air Monitoring

A. After removal of any wall and ceiling poly to critical containment barriers and completing final thorough cleaning of the Regulated Area, the Contractor shall coordinate with OWNER to conduct a visual inspection prior to clearance air sampling in accordance with 855.220.d.1.

B. Following the completion of required visual inspection and completion of the AC required response actions, the OWNER shall retain McKee Environmental, Inc., qualified, independent and IDPH licensed air sampling professional (ASP) to perform Phase Contrast Microscopy (PCM) clearance air monitoring to satisfy IDPH requirements. The PCM clearance air samples must be collected aggressively, while the HEPA filtered negative air machines remain operational. The PCM air sample result, as determined by an AIHA PAT approved laboratory, must be less than 0.01 fiber per cubic centimeters (F/cc) for the regulated area (containment) to be acceptable for tear down activities (removal of the containment / regulated area) and re-occupancy by the general public, other contractors and trades or unauthorized individuals.

C. The ASP (Consultant) will employ and pay for an approved Testing Laboratory to perform clearance air analysis in accord with the Abatement Act, Part 855.170. The Asbestos Abatement Contractor shall pay any additional costs, which arise from failure of air clearance testing results (or inconclusive results from particulate overloading) and may include costs for services of APM, ASP, additional PCM analysis by an AIHA PAT approved lab, and Consultant.

3.6 Re-establishment of Work Area & HVAC Systems

A. Perform the work in accordance with Abatement Act, Subpart D (855.240).

3.7 ATTACHMENTS

A. IEPA / IDPH Notification of Renovation and Demolition Form.

B. Available from OWNER: Asbestos Inspection Summary Report & Analytical Results prepared by McKee Environmental Inc.

02082 Specification (10 pages) Prepared -

For:
Peoria Park District:
Commercial Building Renovation –Glen Oak Pavilion Administration Building
2218 N. Prospect, Peoria, IL

By:
McKee Environmental, Inc.
430 Grimm Road
Congerville, Illinois 61729
309-275-1900

Brad L. M^c^Kee, CIH, LIH
CP 7664 (CIH); # 00194 (LIH)
IDPH #: 100-1758;
Expires 5/15/14 (License); 3/6/15 (Refresher)
March 10, 2014

END OF SECTION 02082

Drawings

ASBESTOS ABATEMENT DRAWING NOTES

Peoria Park District: Glen Oak Pavilion Building, Peoria, Illinois

March 10, 2014

Asbestos Removal Notes: **ALL WORK TO BE DONE IN ACCORDANCE WITH IDPH, OSHA & IEPA RULES & REGULATIONS.**

1 Remove & Dispose of asbestos-containing sheet vinyl, pipe and pipe fittings insulation, boiler flue insulation, carpet, 9x9 floor tile, mastics and floor-leveling materials via full containment methods at locations as indicated on the drawings.

General Notes:

Tentative Schedule: It is anticipated AC will start work tentatively spring of 2014 and shall be completed 15 working days after starting, including clearance air and tear down activities. AC will have 15 working days to complete scope of work once the building becomes available. AC to coordinate all work with Construction Manager (CM) / General Contractor (GC)

Floor Plans are Diagrammatic & Are Intended to Indicate General Proximity & Extent of ACM throughout the Work Areas. AC shall verify all field conditions, locations and quantities prior to bidding Work. Any changes in this asbestos abatement design may only be made by the Asbestos Project Designer (Brad McKee, CIH).

AC is to provide a fully functional Decontamination Unit and Waste Load Out. AC to maintain security to the Work Area/Building at all times. AC is to provide and utilize adequate water during asbestos removal and disposal activities (wet methods).

AC shall coordinate with Owner & GC to determine the transportation of waste out of the building, storage & the location of the Dumpsters for use of proper dispose of asbestos waste materials.

GC & Owner to remove furnishes and fixtures necessary to complete AC work. AC to coordinate the necessary removal with GC.

AC shall coordinate with Owner and GC to verify appropriate shut down the HVAC systems and de-energize all power & gas to Work Areas. AC shall use Lock-out/Tagout methods, shall establish Ground Fault Circuitry for Lighting/Equipment, etc., and comply with all OSHA, EPA & IDPH Requirements, including controlling access to work areas / waste load-out pathways limited to authorized personnel only & securing the Work Areas at all times.

ABBREVIATIONS:

NAE = HEPA Filtered Negative Air Exhaust possible location
DCU = Decontamination Unit Location
LO = Waste Load Out Location
SB = Separation Barrier location per IDPH Requirements Section 855.430(b)
AC = Asbestos Abatement Contractor (a.k.a., "Contractor")
AD = AC Secured & Controlled Access Door to Work Area per IDPH Section 855.430(b)

Peoria Park Dist. – Glen Oak Pavilion
Level 1 Floor Plan

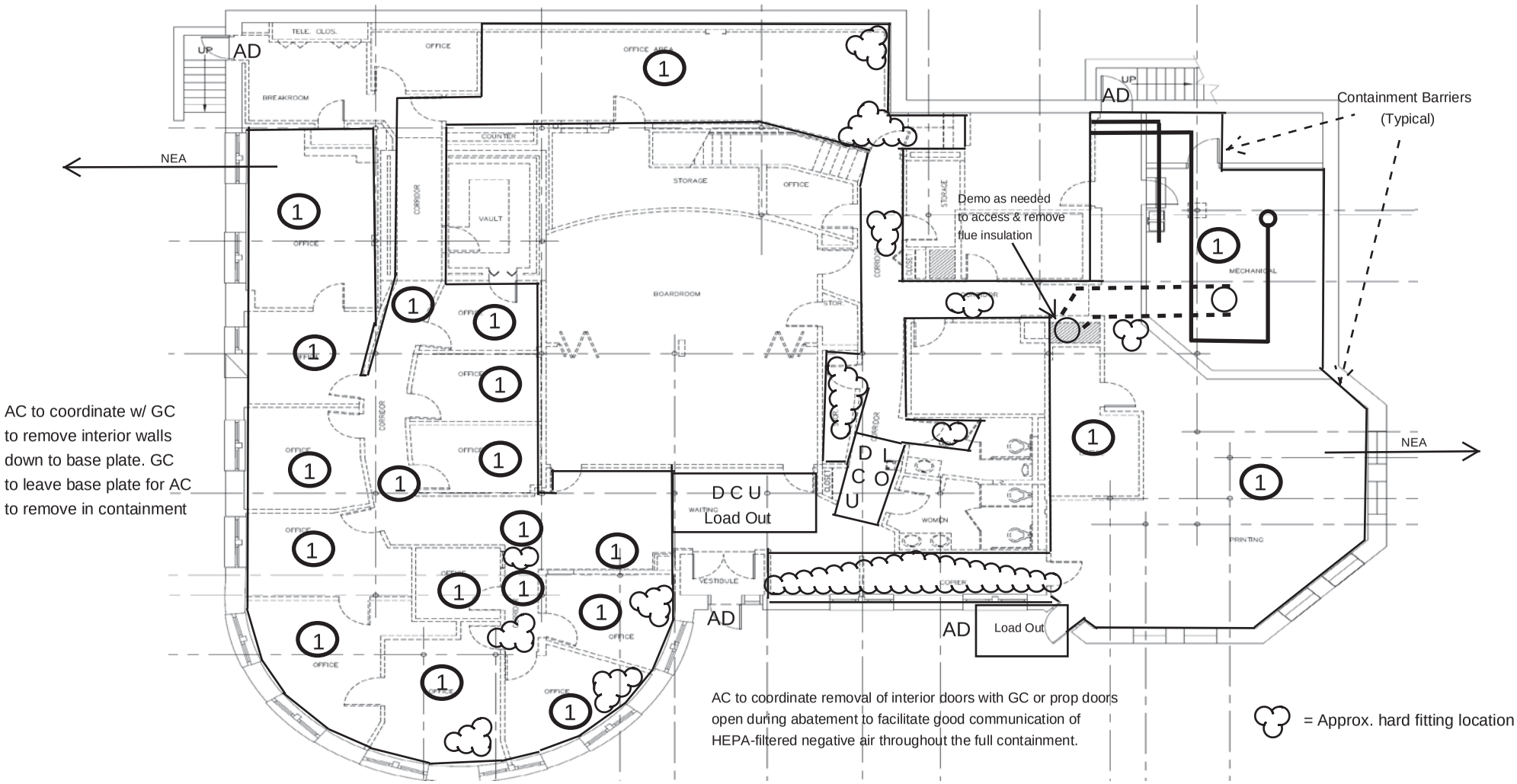

N ↑
Not to Scale

M'KEE ENVIRONMENTAL, INC. 430 Grimm Road Congerville, Illinois 61729 309-965-2934	**ASBESTOS ABATEMENT** **Peoria Park Dist. – Glen Oak Pavilion** **2218 N. Prospect Ave.** **Peoria, Illinois**	Date: 3/10/13 Sheet 2 of 3

Peoria Park Dist. – Glen Oak Pavilion
Level 3 Floor Plan

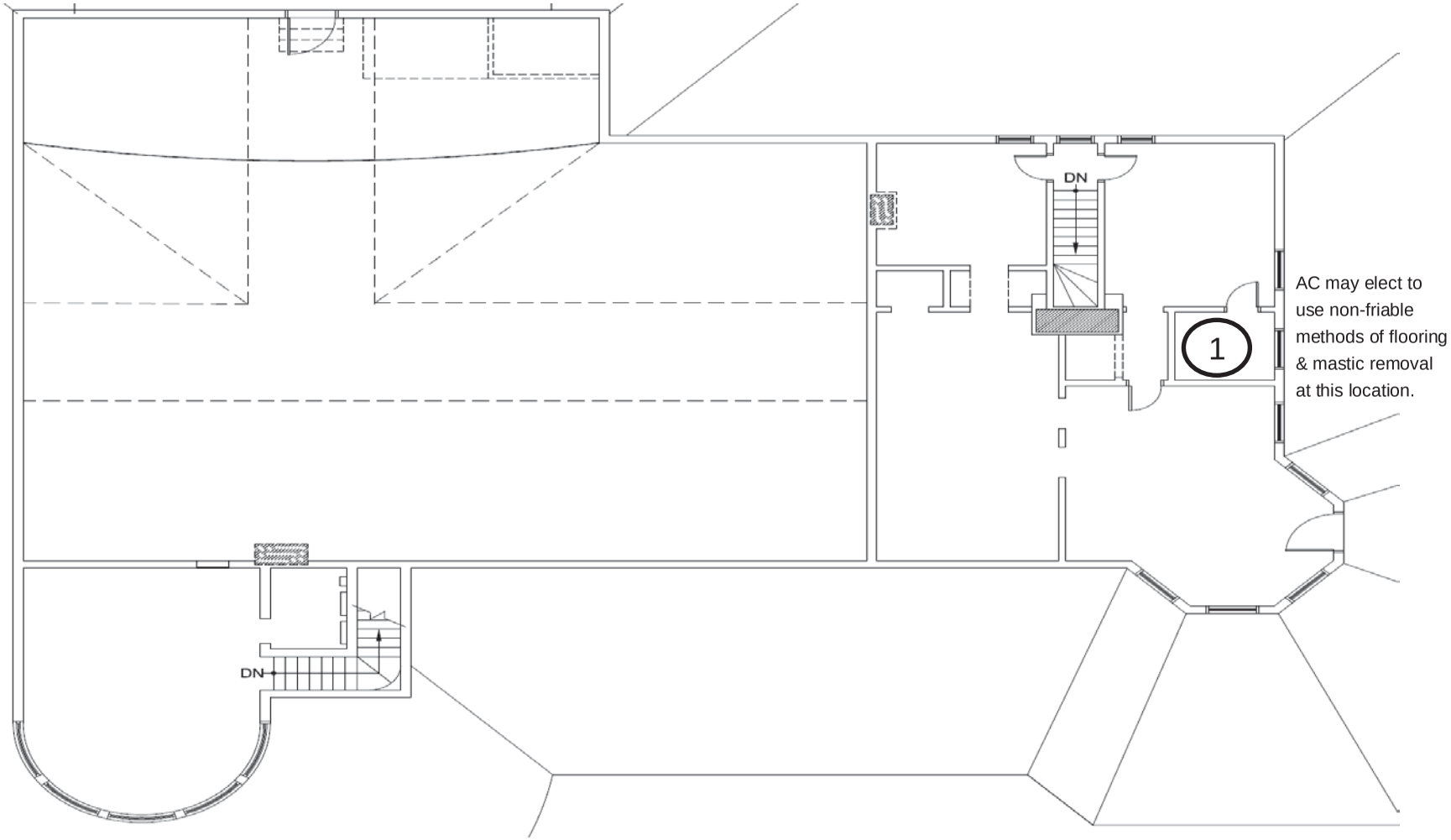

N ↑
Not to Scale

M'KEE ENVIRONMENTAL, INC. 430 Grimm Road Congerville, Illinois 61729 309-965-2934	**ASBESTOS ABATEMENT** **Peoria Park Dist. – Glen Oak Pavilion** **2218 N. Prospect Ave.** **Peoria, Illinois**	Date: 3/10/13 Sheet 3 of 3

SECTION 024119 - SELECTIVE DEMOLITION

PART 1 - GENERAL

1.1 SUMMARY

A. Section Includes:
   1. Demolition and removal of selected portions of building or structure.
   2. Demolition and removal of selected site elements.
   3. Salvage of existing items to be reused or recycled.

1.2 DEFINITIONS

A. Remove: Detach items from existing construction and legally dispose of them off-site unless indicated to be removed and salvaged or removed and reinstalled.

B. Remove and Salvage: Carefully detach from existing construction, in a manner to prevent damage, and deliver to Owner.

C. Remove and Reinstall: Detach items from existing construction, prepare for reuse, and reinstall where indicated.

D. Existing to Remain: Existing items of construction that are not to be permanently removed and that are not otherwise indicated to be removed, removed and salvaged, or removed and reinstalled.

1.3 PREINSTALLATION MEETINGS

A. Predemolition Conference: Conduct conference at Project site.

B. Review area where existing construction is to remain and requires protection.

1.4 INFORMATIONAL SUBMITTALS

A. Qualification Data: For refrigerant recovery technician.

B. Predemolition Photographs or Video: Submit before Work begins.

C. Statement of Refrigerant Recovery: Signed by refrigerant recovery technician.

1.5 CLOSEOUT SUBMITTALS

A. Landfill Records: Indicate receipt and acceptance of hazardous wastes by a landfill facility licensed to accept hazardous wastes.

1.6 QUALITY ASSURANCE

A. Refrigerant Recovery Technician Qualifications: Certified by an EPA-approved certification program.

1.7 FIELD CONDITIONS

A. Owner will occupy portions of building immediately adjacent to selective demolition area. Conduct selective demolition so Owner's operations will not be disrupted.

B. Conditions existing at time of inspection for bidding purpose will be maintained by Owner as far as practical.

C. Notify Architect of discrepancies between existing conditions and Drawings before proceeding with selective demolition.

D. Hazardous Materials: Hazardous materials are present in buildings and structures to be selectively demolished. A report on the presence of hazardous materials is on file for review and use. Examine report to become aware of locations where hazardous materials are present.
   1. Hazardous material remediation is specified elsewhere in the Contract Documents.
   2. Do not disturb hazardous materials or items suspected of containing hazardous materials except under procedures specified elsewhere in the Contract Documents.

E. Storage or sale of removed items or materials on-site is not permitted.

F. Utility Service: Maintain existing utilities indicated to remain in service and protect them against damage during selective demolition operations.
   1. Maintain fire-protection facilities in service during selective demolition operations.

1.8 WARRANTY

A. Existing Warranties: Remove, replace, patch, and repair materials and surfaces cut or damaged during selective demolition, by methods and with materials so as not to void existing warranties.

PART 2 - PRODUCTS

2.1 PEFORMANCE REQUIREMENTS

A. Regulatory Requirements: Comply with governing EPA notification regulations before beginning selective demolition. Comply with hauling and disposal regulations of authorities having jurisdiction.

B. Standards: Comply with ANSI/ASSE A10.6 and NFPA 241.

PART 3 - EXECUTION

3.1 EXAMINATION

A. Verify that utilities have been disconnected and capped before starting selective demolition operations.

B. Survey existing conditions and correlate with requirements indicated to determine extent of selective demolition required.

C. When unanticipated mechanical, electrical, or structural elements that conflict with intended function or design are encountered, investigate and measure the nature and extent of conflict. Promptly submit a written report to Architect.

D. Engage a professional engineer to perform an engineering survey of condition of building to determine whether removing any element might result in structural deficiency or unplanned collapse of any portion of structure or adjacent structures during selective building demolition operations, and for design and preparation of detailed drawings for temporary support and shoring.

E. Survey of Existing Conditions: Record existing conditions by use of preconstruction photographs.
   1. Comply with requirements specified in Section 013233 "Photographic Documentation."

3.2 UTILITY SERVICES AND MECHANICAL/ELECTRICAL SYSTEMS

A. Existing Services/Systems to Remain: Maintain services/systems indicated to remain and protect them against damage.
   1. Comply with requirements for existing services/systems interruptions specified in Section 011000 "Summary."

B. Existing Services/Systems to Be Removed, Relocated, or Abandoned: Locate, identify, disconnect, and seal or cap off indicated utility services and mechanical/electrical systems serving areas to be selectively demolished.
   1. Owner will arrange to shut off indicated services/systems when requested by Contractor.
   2. If services/systems are required to be removed, relocated, or abandoned, provide temporary services/systems that bypass area of selective demolition and that maintain continuity of services/systems to other parts of building.
   3. Disconnect, demolish, and remove fire-suppression systems, plumbing, and HVAC systems, equipment, and components indicated to be removed.
      a. Piping to Be Removed: Remove portion of piping indicated to be removed and cap or plug remaining piping with same or compatible piping material.
      b. Piping to Be Abandoned in Place: Drain piping and cap or plug piping with same or compatible piping material.
      c. Equipment to Be Removed: Disconnect and cap services and remove equipment.
      d. Equipment to Be Removed and Reinstalled: Disconnect and cap services and remove, clean, and store equipment; when appropriate, reinstall, reconnect, and make equipment operational.
      e. Equipment to Be Removed and Salvaged: Disconnect and cap services and remove equipment and deliver to Owner.
      f. Ducts to Be Removed: Remove portion of ducts indicated to be removed and plug remaining ducts with same or compatible ductwork material.
      g. Ducts to Be Abandoned in Place: Cap or plug ducts with same or compatible ductwork material.

C. Refrigerant: Remove refrigerant from mechanical equipment to be selectively demolished according to 40 CFR 82 and regulations of authorities having jurisdiction.

3.3 PREPARATION

A. Site Access and Temporary Controls: Conduct selective demolition and debris-removal operations to ensure minimum interference with roads, streets, walks, walkways, and other adjacent occupied and used facilities.
   1. Comply with requirements for access and protection specified in Section 015000 "Temporary Facilities and Controls."

B. Temporary Facilities: Provide temporary barricades and other protection required to prevent injury to people and damage to adjacent buildings and facilities to remain.

C. Temporary Shoring: Provide and maintain shoring, bracing, and structural supports as required to preserve stability and prevent movement, settlement, or collapse of construction and finishes to remain, and to prevent unexpected or uncontrolled movement or collapse of construction being demolished.

3.4 SELECTIVE DEMOLITION, GENERAL

A. General: Demolish and remove existing construction only to the extent required by new construction and as indicated. Use methods required to complete the Work within limitations of governing regulations and as follows:
   1. Neatly cut openings and holes plumb, square, and true to dimensions required. Use cutting methods least likely to damage construction to remain or adjoining construction. Use hand tools or small power tools designed for sawing or grinding, not hammering and chopping, to minimize disturbance of adjacent surfaces. Temporarily cover openings to remain.
   2. Cut or drill from the exposed or finished side into concealed surfaces to avoid marring existing finished surfaces.
   3. Do not use cutting torches until work area is cleared of flammable materials. At concealed spaces, such as duct and pipe interiors, verify condition and contents of hidden space before starting flame-cutting operations. Maintain fire watch and portable fire-suppression devices during flame-cutting operations.
   4. Locate selective demolition equipment and remove debris and materials so as not to impose excessive loads on supporting walls, floors, or framing.
   5. Dispose of demolished items and materials promptly.

B. Removed and Salvaged Items:
   1. Clean salvaged items.
   2. Pack or crate items after cleaning. Identify contents of containers.
   3. Store items in a secure area until delivery to Owner.
   4. Transport items to Owner's storage area designated by Owner.
   5. Protect items from damage during transport and storage.

C. Removed and Reinstalled Items:
   1. Clean and repair items to functional condition adequate for intended reuse.
   2. Pack or crate items after cleaning and repairing. Identify contents of containers.
   3. Protect items from damage during transport and storage.
   4. Reinstall items in locations indicated. Comply with installation requirements for new materials and equipment. Provide connections, supports, and miscellaneous materials necessary to make item functional for use indicated.

D. Existing Items to Remain: Protect construction indicated to remain against damage and soiling during selective demolition. When permitted by Architect, items may be removed to a suitable, protected storage location during selective demolition and cleaned and reinstalled in their original locations after selective demolition operations are complete.

3.5 DISPOSAL OF DEMOLISHED MATERIALS

A. General: Except for items or materials indicated to be reused, salvaged, reinstalled, or otherwise indicated to remain Owner's property, remove demolished materials from Project site and legally dispose of them in an EPA-approved landfill.
   1. Do not allow demolished materials to accumulate on-site.
   2. Remove and transport debris in a manner that will prevent spillage on adjacent surfaces and areas.
   3. Remove debris from elevated portions of building by chute, hoist, or other device that will convey debris to grade level in a controlled descent.
   4. Comply with requirements specified in Section 017419 "Construction Waste Management and Disposal."

B. Burning: Do not burn demolished materials.

C. Disposal: Transport demolished materials off Owner's property and legally dispose of them.

3.6 CLEANING

A. Clean adjacent structures and improvements of dust, dirt, and debris caused by selective demolition operations. Return adjacent areas to condition existing before selective demolition operations began.

END OF SECTION 024119

SECTION 033000 - CAST-IN-PLACE CONCRETE

1.1 SUMMARY

A. Section includes cast-in-place concrete, including formwork, reinforcement, concrete materials, mixture design, placement procedures, and finishes.

B. Related Requirements:
   1. Section 312000 "Earth Moving" for drainage fill under slabs-on-grade.

1.2 ACTION SUBMITTALS

A. Product Data: For each type of product.

B. Design Mixtures: For each concrete mixture. Submit alternate design mixtures when characteristics of materials, Project conditions, weather, test results, or other circumstances warrant adjustments
   1. Indicate amounts of mixing water to be withheld for later addition at Project site.

C. Steel Reinforcement Shop Drawings: Placing Drawings that detail fabrication, bending, and placement.

D. Steel Reinforcement Shop Drawings: Placing drawings that detail fabrication, bending, and placement. Include bar sizes, lengths, material, grade, bar schedules, stirrup spacing, bent bar diagrams, bar arrangement, splices and laps, mechanical connections, tie spacing, hoop spacing, and supports for concrete reinforcement.

E. Construction Joint Layout: Indicate proposed construction joints required to construct the structure.
   1. Location of construction joints is subject to approval of the Architect.

1.3 INFORMATIONAL SUBMITTALS

A. Material certificates: For each of the following, signed by manufacturers:
   1. Cementitious materials.
   2. Admixtures.

B. Material test reports: For the following, from a qualified testing agency, indicating compliance with requirements:
   1. Aggregates.

C. Qualification Data: For Installer, manufacturer, testing agency, upon request.

D. Floor surface flatness and levelness measurements indicating compliance with specified tolerances.

E. Field quality-control reports.

1.4 QUALITY ASSURANCE

A. Manufacturer Qualifications: A firm experienced in manufacturing ready-mixed concrete products and that complies with ASTM C 94/C 94M requirements for production facilities and equipment.
   1. Manufacturer certified according to NRMCA's "Certification of Ready Mixed Concrete Production Facilities."

B. Testing Agency Qualifications: An independent agency, acceptable to authorities having jurisdiction, qualified according to ASTM C 1077 and ASTM E 329 for testing indicated.
   1. Personnel conducting field tests shall be qualified as ACI Concrete Field Testing Technician, Grade I, according to ACI CP-1 or an equivalent certification program.
   2. Personnel performing laboratory tests shall be ACI-certified Concrete Strength Testing Technician and Concrete Laboratory Testing Technician – Grade I. Testing Agency laboratory supervisor shall be an ACI-certified Concrete Laboratory Testing Technician – Grade II.

C. Source Limitations: Obtain each type or class of cementitious material of the same brand from the same manufacturer's plant, obtain aggregate from single source, and obtain admixtures from single source from single manufacturer.

D. ACI Publications: Comply with the following unless modified by requirements in the Contract Documents:
   1. ACI 301, "Specifications for Structural Concrete," Sections 1 through 5.
   2. ACI 117, "Specifications for Tolerances for Concrete Construction and Materials."

E. Concrete Testing Service: Engage a qualified independent testing agency to perform material evaluation tests and to design concrete mixtures.

1.5 FIELD CONDITIONS

A. Cold-Weather Placement: Comply with ACI 306.1.
   1. Do not use calcium chloride, salt, or other materials containing antifreeze agents or chemical accelerators unless otherwise specified and approved in mixture designs.

B. Hot-Weather Placement: Comply with ACI 301.

1.6 DELIVERY, STORAGE, AND HANDLING

A. Steel Reinforcement: Deliver, store, and handle steel reinforcement to prevent bending and damage. Avoid damaging coatings on steel reinforcement, where applicable.

B. Waterstops: Store waterstops under cover to protect from moisture, sunlight, dirt, oil, and other contaminants.

PART 2 - PRODUCTS

2.1 CONCRETE, GENERAL

A. ACI Publications: Comply with the following unless modified by requirements in the Contract Documents:
   1. ACI 301.
   2. ACI 117.

2.2 FORM-FACING MATERIALS

A. Smooth-Formed Finished Concrete: Form-facing panels that provide continuous, true, and smooth concrete surfaces. Furnish in largest practicable sizes to minimize number of joints.

B. Rough-Formed Finished Concrete: Plywood, lumber, metal, or another approved material. Provide lumber dressed on at least two edges and one side for tight fit.

C. Chamfer Strips: Wood, metal, PVC, or rubber strips, 3/4 by 3/4 inch, minimum.

D. Form-Release Agent: Commercially formulated form-release agent that will not bond with, stain, or adversely affect concrete surfaces and will not impair subsequent treatments of concrete surfaces.
   1. Formulate form-release agent with rust inhibitor for steel form-facing materials.

E. Form Ties: Factory-fabricated, removable or snap-off metal or glass-fiber-reinforced plastic form ties designed to resist lateral pressure of fresh concrete on forms and to prevent spalling of concrete on removal.
   1. Furnish units that will leave no corrodible metal closer than 1 inch to the plane of exposed concrete surface.
   2. Furnish ties that, when removed, will leave holes no larger than 1 inch in diameter in concrete surface.
   3. Furnish ties with integral water-barrier plates to walls indicated to receive dampproofing or waterproofing.

2.3 STEEL REINFORCEMENT

A. Reinforcing Bars: ASTM A 615/A 615M, Grade 60, deformed.

B. Low-Alloy-Steel Reinforcing Bars: ASTM A 706/A 706M, deformed.

C. Plain-Steel Welded-Wire Reinforcement: ASTM A 1064/A 1064M, plain, fabricated from as-drawn steel wire into flat sheets.

D. Bar Supports: Bolsters, chairs, spacers, and other devices for spacing, supporting, and fastening reinforcing bars and welded-wire reinforcement in place. Manufacture bar supports from steel wire, plastic, or precast concrete according to CRSI's "Manual of Standard Practice."

E. Joint Dowel Bars: ASTM A 615/A 615M, Grade 60 (Grade 420), plain-steel bars, cut true to length with ends square and free of burrs.

2.4 CONCRETE MATERIALS

A. Cementitious Materials:
1. Portland Cement: ASTM C 150/C 150M, Type I gray. Supplement with the following:
a. Fly Ash: ASTM C 618 Class F or C.

B. Normal-Weight Aggregates: ASTM C 33, Class 3S coarse aggregate or better, graded. Provide aggregates from a single source.
1. Maximum Coarse-Aggregate Size: 3/4 inch nominal.
2. Fine Aggregate: Free of materials with deleterious reactivity to alkali in cement.

C. Air-Entraining Admixture: ASTM C 260/C 260M.

D. Chemical Admixtures: Certified by manufacturer to be compatible with other admixtures and that do not contribute water-soluble chloride ions exceeding those permitted in hardened concrete. Do not use calcium chloride or admixtures containing calcium chloride.
1. Water-Reducing Admixture: ASTM C 494/C 494M, Type A.
2. High-Range, Water-Reducing Admixture: ASTM C 494/C 494M, Type F.

E. Water: ASTM C 94/C 94M and potable.

F. Waterproofing Concrete Admixture: Concure Systems Admixture by Concure Systems, Phoenix, AZ. Phone: (480)820-7171.
1. Utilize in all interior concrete flatwork.
2. Concure manufacturer’s technical representative shall be on site during all mixing and placing of Concure products.
3. Accessory Materials: Concure Crack Fill Binder.

2.5 WATERSTOPS

A. Flexible PVC Waterstops: CE CRD-C 572 for embedding in concrete to prevent passage of fluids through joints. Factory fabricate corners, intersections, and directional changes.
1. Manufacturers: Subject to compliance with requirements, available manufacturers offering products that may be incorporated into the Work include, but are not limited to the following:
a. BoMetals, Inc.
b. Greenstreak.
c. Paul Murphy Plastics Company.
d. Vinylex Corp.
2. Profile: Ribbed with center bulb.
3. Dimensions: 6 inches by 3/8 inch thick; nontapered.

2.6 VAPOR RETARDERS

A. Sheet Vapor Retarder: ASTM E 1745, Class A, except with a permeance of less than 0.01 perms per ASTM E 1745 Section 7. Thickness: 15 mils minimum. Maintain permeance of less than 0.01 perms after mandatory conditioning tests per ASTM E 154 Sections 8, 11, 12, and 13. Include manufacturer’s recommended adhesive or pressure-sensitive tape.
1. Products: Subject to compliance with requirements, available products that may be incorporated into the Work include, but are not limited to, the following:

a. Stego Industries, LLC; Stego Wrap 15 mil Class A.
b. Grace Construction Products, W.R. Grace & Co; Florprufe 120.
c. Insulation Solutions, Inc; Viper VaporCheck II 15-mil.
d. Meadows, W.R., Inc; Perminator 15 mil.
e. Epro Services: Ecoshield E15.
f. Reef Industries: Vaporguard.

2.7 CURING MATERIALS

A. Evaporation Retarder: Waterborne, monomolecular film forming, manufactured for application to fresh concrete.

B. Absorptive Cover: AASHTO M 182, Class 2, burlap cloth made from jute or kenaf, weighing approximately 9 oz./sq. yd. when dry.

C. Moisture-Retaining Cover: ASTM C 171, polyethylene film or white burlap-polyethylene sheet.

D. Water: Potable.

E. Clear, Waterborne, Membrane-Forming Curing Compound: ASTM C 309, Type 1, Class B, dissipating.

2.8 RELATED MATERIALS

A. Expansion- and Isolation-Joint-Filler Strips: ASTM D 1751, asphalt-saturated cellulosic fiber.

B. Semirigid Joint Filler: Two-component, semirigid, 100 percent solids, aromatic polyuria with a Type A shore durometer hardness range of 90 to 95 per ASTM D2240.

C. Bonding Agent: ASTM C 1059/C 1059M, Type II, non-redispersible, acrylic emulsion or styrene butadiene.

D. Epoxy Bonding Adhesive: ASTM C 881, two-component epoxy resin, capable of humid curing and bonding to damp surfaces, of class suitable for application temperature and of grade to suit requirements and as follows:
1. Types IV and V, load bearing, for bonding hardened or freshly mixed concrete to hardened concrete.

E. Reglets: Fabricate reglets of not less than 0.0022-inch-thick galvanized-steel sheet. Temporarily fill or cover face opening of reglet to prevent intrusion of concrete or debris.

F. Dovetail Anchor Slots: Hot-dip galvanized-steel sheet, not less than 0.034 inch thick, with bent tab anchors. Temporarily fill or cover face opening of slots to prevent intrusion of concrete or debris.

2.9 REPAIR MATERIALS

A. Repair Underlayment: Cement-based, polymer-modified, self-leveling product that can be applied in thicknesses from 1/8 inch (3.2 mm) and that can be feathered at edges to match adjacent floor elevations.

1. Cement Binder: ASTM C 150, portland cement or hydraulic or blended hydraulic cement as defined in ASTM C 219.
2. Primer: Product of underlayment manufacturer recommended for substrate, conditions, and application.
3. Aggregate: Well-graded, washed gravel, 1/8 to 1/4 inch or coarse sand as recommended by underlayment manufacturer.
4. Compressive Strength: Not less than 4100 psi at 28 days when tested according to ASTM C 109/C 109M.

B. Repair Overlayment: Cement-based, polymer-modified, self-leveling product that can be applied in thicknesses from 1/4 inch and that can be filled in over a scarified surface to match adjacent floor elevations.
1. Cement Binder: ASTM C 150, portland cement or hydraulic or blended hydraulic cement as defined in ASTM C 219.
2. Primer: Product of topping manufacturer recommended for substrate, conditions, and application.
3. Aggregate: Well-graded, washed gravel, 1/8 to 1/4 inch or coarse sand as recommended by topping manufacturer.

C. Compressive Strength: Not less than 5000 psi at 28 days when tested according to ASTM C 109/C 109M.

2.10 CONCRETE MIXTURES, GENERAL

A. Prepare design mixtures for each type and strength of concrete, proportioned on the basis of laboratory trial mixture or field test data, or both, according to ACI 301.

B. Cementitious Materials: Limit percentage, by weight, of cementitious materials other than Portland cement in concrete as follows:
1. Fly Ash: 25 percent.

C. Limit water-soluble, chloride-ion content in hardened concrete to 0.15 percent by weight of cement.

D. Admixtures: Use admixtures according to manufacturer's written instructions.
1. Use water-reducing admixture in concrete, as required, for placement and workability.
2. Use water-reducing and -retarding admixture when required by high temperatures, low humidity, or other adverse placement conditions.

2.11 CONCRETE MIXTURES FOR BUILDING ELEMENTS

A. Footings and foundation walls: Proportion normal-weight concrete mixture as follows:
1. Minimum Compressive Strength: 4000 psi at 28 days.
2. Maximum Water-Cementitious Materials Ratio: 0.45.
3. Slump Limit: 4 inches or 8 inches for concrete with verified slump of 2 to 4 inches before adding high-range water-reducing admixture or plasticizing admixture, plus or minus 1 inch.
4. Air Content: 6 percent, plus or minus 1.5 percent at point of delivery for 3/4-inch nominal maximum aggregate size.

B. Slabs-on-Grade and Suspended Slabs: Proportion normal-weight concrete mixture as follows:
   1. Minimum Compressive Strength: 4000 psi at 28 days.
   2. Minimum Cementitious Materials Content: 540 lb/cu. yd. for 3/4-inch nominal maximum aggregate size.
   3. Maximum Water-Cementitious Materials Ratio: 0.45.
   4. Slump Limit: 4 inches, plus or minus 1 inch.
   5. Air Content: Do not allow air content of trowel-finished floors to exceed 3 percent.
   6. Concure Systems Admixture (Level 1 slab-on-grade only).

2.12 FABRICATING REINFORCEMENT

A. Fabricate steel reinforcement according to CRSI's "Manual of Standard Practice."

2.13 CONCRETE MIXING

A. Ready-Mixed Concrete: Measure, batch, mix, and deliver concrete according to ASTM C 94/C 94M, and furnish batch ticket information.
   1. When air temperature is between 85 and 90 deg F, reduce mixing and delivery time from 1-1/2 hours to 75 minutes; when air temperature is above 90 deg F, reduce mixing and delivery time to 60 minutes.

PART 3 - EXECUTION

3.1 FORMWORK INSTALLATION

A. Design, erect, shore, brace, and maintain formwork, according to ACI 301, to support vertical, lateral, static, and dynamic loads, and construction loads that might be applied, until structure can support such loads.

B. Construct formwork so concrete members and structures are of size, shape, alignment, elevation, and position indicated, within tolerance limits of ACI 117.

C. Limit concrete surface irregularities, designated by ACI 347 as abrupt or gradual, as follows:
   1. Class A, 1/8 inch for smooth-formed finished surfaces.
   2. Class C, 1/2 inch for rough-formed finished surfaces.

D. Construct forms tight enough to prevent loss of concrete mortar.

E. Fabricate forms for easy removal without hammering or prying against concrete surfaces. Provide crush or wrecking plates where stripping may damage cast concrete surfaces. Provide top forms for inclined surfaces steeper than 1.5 horizontal to 1 vertical.
   1. Install keyways, reglets, recesses, and the like, for easy removal.
   2. Do not use rust-stained steel form-facing material.

F. Set edge forms, bulkheads, and intermediate screed strips for slabs to achieve required elevations and slopes in finished concrete surfaces.

Provide and secure units to support screed strips; use strike-off templates or compacting-type screeds.

G. Provide temporary openings for cleanouts and inspection ports where interior area of formwork is inaccessible. Close openings with panels tightly fitted to forms and securely braced to prevent loss of concrete mortar. Locate temporary openings in forms at inconspicuous locations.

H. Chamfer exterior corners and edges of permanently exposed concrete.

I. Form openings, chases, offsets, sinkages, keyways, reglets, blocking, screeds, and bulkheads required in the Work. Determine sizes and locations from trades providing such items.

J. Clean forms and adjacent surfaces to receive concrete. Remove chips, wood, sawdust, dirt, and other debris just before placing concrete.

K. Retighten forms and bracing before placing concrete, as required, to prevent mortar leaks and maintain proper alignment.

L. Coat contact surfaces of forms with form-release agent, according to manufacturer's written instructions, before placing reinforcement.

3.2 EMBEDDED ITEM INSTALLATION

A. Place and secure anchorage devices and other embedded items required for adjoining work that is attached to or supported by cast-in-place concrete. Use setting drawings, templates, diagrams, instructions, and directions furnished with items to be embedded.

3.3 REMOVING AND REUSING FORMS

A. General: Formwork for sides of beams, walls, columns, and similar parts of the Work that does not support weight of concrete may be removed after cumulatively curing at not less than 50 deg F (10 deg C) for 24 hours after placing concrete. Concrete has to be hard enough to not be damaged by form-removal operations and curing and protection operations need to be maintained.
   1. Leave formwork for beam soffits, joists, slabs, and other structural elements that supports weight of concrete in place until concrete has achieved at least 75 percent of its 28-day design compressive strength.
   2. Remove forms only if shores have been arranged to permit removal of forms without loosening or disturbing shores.

B. Clean and repair surfaces of forms to be reused in the Work. Split, frayed, delaminated, or otherwise damaged form-facing material will not be acceptable for exposed surfaces. Apply new form-release agent.

C. When forms are reused, clean surfaces, remove fins and laitance, and tighten to close joints. Align and secure joints to avoid offsets. Do not use patched forms for exposed concrete surfaces unless approved by Architect.

3.4 VAPOR-RETARDER INSTALLATION

A. Sheet Vapor Retarders: Place, protect, and repair sheet vapor retarder according to ASTM E 1643 and manufacturer's written instructions.
   1. Lap joints 6 inches and seal with manufacturer's recommended tape.
   2. Unroll vapor retarder with the longest dimension parallel with the direction of the concrete pour.
   3. Lap vapor retarder over footings and/or seal to foundation walls.
   4. Seal all penetrations (including pipes) per manufacturer’s instructions.
   5. No penetration of the vapor retarder is allowed except for reinforcing steel and permanent utilities.

   6. Repair damaged areas by cutting patches of vapor retarder, overlapping damaged area 6 inches, and taping all four sides with tape.

3.5 STEEL REINFORCEMENT INSTALLATION

A. General: Comply with CRSI's "Manual of Standard Practice" for fabricating, placing, and supporting reinforcement.
   1. Do not cut or puncture vapor retarder. Repair damage and reseal vapor retarder before placing concrete.

B. Clean reinforcement of loose rust and mill scale, earth, ice, and other foreign materials that would reduce bond to concrete.

C. Accurately position, support, and secure reinforcement against displacement. Locate and support reinforcement with bar supports to maintain minimum concrete cover. Do not tack weld crossing reinforcing bars.

D. Set wire ties with ends directed into concrete, not toward exposed concrete surfaces.

E. Install welded wire reinforcement in longest practicable lengths on bar supports spaced to minimize sagging. Lap edges and ends of adjoining sheets at least one mesh spacing. Offset laps of adjoining sheet widths to prevent continuous laps in either direction. Lace overlaps with wire.

3.6 JOINTS

A. General: Construct joints true to line with faces perpendicular to surface plane of concrete.

B. Construction Joints: Install so strength and appearance of concrete are not impaired, at locations indicated or as approved by Architect.
   1. Place joints perpendicular to main reinforcement. Continue reinforcement across construction joints unless otherwise indicated. Do not continue reinforcement through sides of strip placements of floors and slabs.
   2. Form keyed joints as indicated. Embed keys at least 1-1/2 inches into concrete.

3. Locate joints for beams, slabs, joists, and girders in the middle third of spans. Offset joints in girders a minimum distance of twice the beam width from a beam-girder intersection.
4. Locate horizontal joints in walls and columns at underside of floors, slabs, beams, and girders and at the top of footings or floor slabs.
5. Space vertical joints in walls as indicated. Locate joints beside piers integral with walls, near corners, and in concealed locations where possible.
6. Use epoxy-bonding adhesive at locations where fresh concrete is placed against hardened or partially hardened concrete surfaces.

C. Contraction Joints in Slabs-on-Grade: Construct contraction joints for a depth equal to at least one-fourth of concrete thickness as follows:
1. Sawed Joints: Form contraction joints with power saws equipped with shatterproof abrasive or diamond-rimmed blades. Cut 1/8-inch- wide joints into concrete when cutting action does not tear, abrade, or otherwise damage surface and before concrete develops random contraction cracks.

D. Isolation Joints in Slabs-on-Grade: After removing formwork, install joint-filler strips at slab junctions with vertical surfaces, such as column pedestals, foundation walls, grade beams, and other locations, as indicated.
1. Extend joint-filler strips full width and depth of joint, terminating flush with finished concrete surface unless otherwise indicated.
2. Terminate full-width joint-filler strips not less than 1/2 inch or more than 1 inch below finished concrete surface where joint sealants, specified in Section 079200 "Joint Sealants," are indicated.
3. Install joint-filler strips in lengths as long as practicable. Where more than one length is required, lace or clip sections together.

3.7 WATERSTOP INSTALLATION

A. Waterstops: Install in construction joints and at other locations indicated to form a continuous diaphragm. Install in the longest lengths practicable. Support and protect exposed waterstops during progress of the Work. Field fabricate joints in waterstops according to manufacturer's written instructions.

3.8 CONCRETE PLACEMENT

A. Before placing concrete, verify that installation of formwork, reinforcement, and embedded items is complete and that required inspections are completed.

B. Do not add water to concrete during delivery, at Project site, or during placement unless approved by Architect and included in the approved mix design.

C. Deposit concrete continuously in one layer or in horizontal layers of such thickness that no new concrete is placed on concrete that has hardened enough to cause seams or planes of weakness. If a section

cannot be placed continuously, provide construction joints as indicated. Deposit concrete to avoid segregation.

1. Deposit concrete in horizontal layers of depth to not exceed formwork design pressures and in a manner to avoid inclined construction joints.
2. Consolidate placed concrete with mechanical vibrating equipment according to ACI 301.
3. Do not use vibrators to transport concrete inside forms. Insert and withdraw vibrators vertically at uniformly spaced locations to rapidly penetrate placed layer and at least 6 inches (150 mm) into preceding layer. Do not insert vibrators into lower layers of concrete that have begun to lose plasticity. At each insertion, limit duration of vibration to time necessary to consolidate concrete and complete embedment of reinforcement and other embedded items without causing mixture constituents to segregate.

D. Deposit and consolidate concrete for floors and slabs in a continuous operation, within limits of construction joints, until placement of a panel or section is complete.

1. Consolidate concrete during placement operations so concrete is thoroughly worked around reinforcement and other embedded items and into corners.
2. Maintain reinforcement in position on chairs during concrete placement.
3. Screed slab surfaces with a straightedge and strike off to correct elevations.
4. Slope surfaces uniformly to drains where required.
5. Begin initial floating using bull floats or darbies to form a uniform and open-textured surface plane, before excess bleedwater appears on the surface. Do not further disturb slab surfaces before starting finishing operations.

E. Cold-Weather Placement: Comply with ACI 306.1 and as follows. Protect concrete work from physical damage or reduced strength that could be caused by frost, freezing actions, or low temperatures.

1. When average high and low temperature is expected to fall below 40 deg F for three successive days, maintain delivered concrete mixture temperature within the temperature range required by ACI 301.
2. Do not use frozen materials or materials containing ice or snow. Do not place concrete on frozen subgrade or on subgrade containing frozen materials.
3. Do not use calcium chloride, salt, or other materials containing antifreeze agents or chemical accelerators unless otherwise specified and approved in mixture designs.

F. Hot-Weather Placement: Comply with ACI 301 and as follows:

1. Maintain concrete temperature below 90 deg F at time of placement. Chilled mixing water or chopped ice may be used to control temperature, provided water equivalent of ice is calculated to total amount of mixing water. Using liquid nitrogen to cool concrete is Contractor's option.

G. Fog-spray forms, steel reinforcement, and subgrade just before placing concrete. Keep subgrade uniformly moist without standing water, soft spots, or dry areas.

3.9 FINISHING FORMED SURFACES

A. Rough-Formed Finish: As-cast concrete texture imparted by form-facing material with tie holes and defects repaired and patched. Remove fins and other projections that exceed specified limits on formed-surface irregularities.
   1. Apply to concrete surfaces not exposed to public view.

B. Smooth-Formed Finish: As-cast concrete texture imparted by form-facing material, arranged in an orderly and symmetrical manner with a minimum of seams. Repair and patch tie holes and defects. Remove fins and other projections that exceed specified limits on formed-surface irregularities.

C. Rubbed Finish: Apply the following to smooth-formed-finished as-cast concrete where indicated:
   1. Smooth-Rubbed Finish: Not later than one day after form removal, moisten concrete surfaces and rub with carborundum brick or another abrasive until producing a uniform color and texture. Do not apply cement grout other than that created by the rubbing process.
   2. Grout-Cleaned Finish: Wet concrete surfaces and apply grout of a consistency of thick paint to coat surfaces and fill small holes. Mix 1 part portland cement to 1-1/2 parts fine sand with a 1:1 mixture of bonding admixture and water. Add white portland cement in amounts determined by trial patches, so color of dry grout matches adjacent surfaces. Scrub grout into voids and remove excess grout. When grout whitens, rub surface with clean burlap and keep surface damp by fog spray for at least 36 hours.
   3. Cork-Floated Finish: Wet concrete surfaces and apply a stiff grout. Mix 1 part portland cement and 1 part fine sand with a 1:1 mixture of bonding agent and water. Add white portland cement in amounts determined by trial patches, so color of dry grout matches adjacent surfaces. Compress grout into voids by grinding surface. In a swirling motion, finish surface with a cork float.

D. Related Unformed Surfaces: At tops of walls, horizontal offsets, and similar unformed surfaces adjacent to formed surfaces, strike off smooth and finish with a texture matching adjacent formed surfaces. Continue final surface treatment of formed surfaces uniformly across adjacent unformed surfaces unless otherwise indicated.

3.10 FINISHING FLOORS AND SLABS

A. General: Comply with ACI 302.1R recommendations for screeding, restraightening, and finishing operations for concrete surfaces. Do not wet concrete surfaces.

B. Trowel Finish: After applying float finish, apply first troweling and consolidate concrete by hand or power-driven trowel. Continue troweling passes and restraighten until surface is free of trowel marks and uniform in texture and appearance. Grind smooth any surface

defects that would telegraph through applied coatings or floor coverings.

1. Apply a trowel finish to surfaces exposed to view or to be covered with resilient flooring, carpet, ceramic or quarry tile set over a cleavage membrane, paint, or another thin-film-finish coating system.
2. Finish and measure surface, so gap at any point between concrete surface and an unleveled, freestanding, 10-ft.- long straightedge resting on two high spots and placed anywhere on the surface does not exceed 1/8 inch.

C. Trowel and Fine-Broom Finish: Apply a first trowel finish to surfaces indicated or where ceramic or quarry tile is to be installed by either thickset or thinset method. While concrete is still plastic, slightly scarify surface with a fine broom.

1. Comply with flatness and levelness tolerances for trowel-finished floor surfaces.

D. Broom Finish: Apply a broom finish to exterior concrete platforms, steps, ramps, and elsewhere as indicated.

1. Immediately after float finishing, slightly roughen trafficked surface by brooming with fiber-bristle broom perpendicular to main traffic route. Coordinate required final finish with Architect before application.

3.11 MISCELLANEOUS CONCRETE ITEMS

A. Filling In: Fill in holes and openings left in concrete structures after work of other trades is in place unless otherwise indicated. Mix, place, and cure concrete, as specified, to blend with in-place construction. Provide other miscellaneous concrete filling indicated or required to complete the Work.

3.12 CONCRETE PROTECTING AND CURING

A. General: Protect freshly placed concrete from premature drying and excessive cold or hot temperatures. Comply with ACI 306.1 for cold-weather protection and ACI 301 for hot-weather protection during curing.

B. Evaporation Retarder: Apply evaporation retarder to unformed concrete surfaces if hot, dry, or windy conditions cause moisture loss approaching 0.2 lb/sq. ft. x h before and during finishing operations. Apply according to manufacturer's written instructions after placing, screeding, and bull floating or darbying concrete, but before float finishing.

C. Formed Surfaces: Cure formed concrete surfaces, including underside of beams, supported slabs, and other similar surfaces. If forms remain during curing period, moist cure after loosening forms. If removing forms before end of curing period, continue curing for remainder of curing period.

D. Cure concrete according to ACI 308.1, by one or a combination of the following methods:

a. Water.
b. Continuous water-fog spray.
c. Absorptive cover, water saturated, and kept continuously wet. Cover concrete surfaces and edges with 12-inch (300-mm) lap over adjacent absorptive covers.

2. Moisture-Retaining-Cover Curing: Cover concrete surfaces with moisture-retaining cover for curing concrete, placed in widest practicable width, with sides and ends lapped at least 12 inches, and sealed by waterproof tape or adhesive. Cure for not less than seven days. Immediately repair any holes or tears during curing period, using cover material and waterproof tape.
   a. Moisture cure or use moisture-retaining covers to cure concrete surfaces to receive floor coverings.
   b. Moisture cure or use moisture-retaining covers to cure concrete surfaces to receive penetrating liquid floor treatments.
   c. Cure concrete surfaces to receive floor coverings with either a moisture-retaining cover or a curing compound that the manufacturer certifies will not interfere with bonding of floor covering used on Project.
3. Curing Compound: Apply uniformly in continuous operation by power spray or roller according to manufacturer's written instructions. Recoat areas subjected to heavy rainfall within three hours after initial application. Maintain continuity of coating and repair damage during curing period.
   a. Removal: After curing period has elapsed, remove curing compound without damaging concrete surfaces by method recommended by curing compound manufacturer.
4. Curing and Sealing Compound: Apply uniformly to floors and slabs indicated in a continuous operation by power spray or roller according to manufacturer's written instructions. Recoat areas subjected to heavy rainfall within three hours after initial application. Repeat process 24 hours later and apply a second coat. Maintain continuity of coating and repair damage during curing period.

3.13 LIQUID FLOOR TREATMENTS

A. Penetrating Liquid Floor Treatment: Prepare, apply, and finish penetrating liquid floor treatment according to manufacturer's written instructions.
   1. Remove curing compounds, sealers, oil, dirt, laitance, and other contaminants and complete surface repairs.
   2. Do not apply to concrete that is less than the age specified by the manufacturer.
   3. Apply liquid until surface is saturated, scrubbing into surface until a gel forms; rewet; and repeat brooming or scrubbing. Rinse with water; remove excess material until surface is dry. Apply a second coat in a similar manner if surface is rough or porous.

B. Sealing Coat: Uniformly apply a continuous sealing coat of curing and sealing compound to hardened concrete by power spray or roller according to manufacturer's written instructions.

3.14 JOINT FILLING

A. Prepare, clean, and install joint filler according to manufacturer's written instructions.
   1. Defer joint filling until concrete has aged at least one month. Do not fill joints until construction traffic has permanently ceased.

B. Remove dirt, debris, saw cuttings, curing compounds, and sealers from joints; leave contact faces of joint clean and dry.

C. Install semirigid joint filler full depth in saw-cut joints and at least 2 inches deep in formed joints. Overfill joint and trim joint filler flush with top of joint after hardening.

3.15 CONCRETE SURFACE REPAIRS

A. Defective Concrete: Repair and patch defective areas when approved by Architect. Remove and replace concrete that cannot be repaired and patched to Architect's approval.

B. Patching Mortar: Mix dry-pack patching mortar, consisting of one part portland cement to two and one-half parts fine aggregate passing a No. 16 sieve, using only enough water for handling and placing.

C. Repairing Formed Surfaces: Surface defects include color and texture irregularities, cracks, spalls, air bubbles, honeycombs, rock pockets, fins and other projections on the surface, and stains and other discolorations that cannot be removed by cleaning.
   1. Immediately after form removal, cut out honeycombs, rock pockets, and voids more than 1/2 inch in any dimension to solid concrete. Limit cut depth to 3/4 inch. Make edges of cuts perpendicular to concrete surface. Clean, dampen with water, and brush-coat holes and voids with bonding agent. Fill and compact with patching mortar before bonding agent has dried. Fill form-tie voids with patching mortar or cone plugs secured in place with bonding agent.
   2. Repair defects on surfaces exposed to view by blending white portland cement and standard portland cement so that, when dry, patching mortar will match surrounding color. Patch a test area at inconspicuous locations to verify mixture and color match before proceeding with patching. Compact mortar in place and strike off slightly higher than surrounding surface.
   3. Repair defects on concealed formed surfaces that affect concrete's durability and structural performance as determined by Architect.

D. Repairing Unformed Surfaces: Test unformed surfaces, such as floors and slabs, for finish and verify surface tolerances specified for each surface. Correct low and high areas. Test surfaces sloped to drain for trueness of slope and smoothness; use a sloped template.
   1. Repair finished surfaces containing defects. Surface defects include spalls, popouts, honeycombs, rock pockets, crazing and cracks in excess of 0.01 inch wide or that penetrate to reinforcement or completely through unreinforced sections regardless of width, and other objectionable conditions.

2. After concrete has cured at least 14 days, correct high areas by grinding.
3. Correct localized low areas during or immediately after completing surface finishing operations by cutting out low areas and replacing with patching mortar. Finish repaired areas to blend into adjacent concrete.
4. Correct other low areas scheduled to receive floor coverings with a repair underlayment. Prepare, mix, and apply repair underlayment and primer according to manufacturer's written instructions to produce a smooth, uniform, plane, and level surface. Feather edges to match adjacent floor elevations.
5. Correct other low areas scheduled to remain exposed with a repair topping. Cut out low areas to ensure a minimum repair topping depth of 1/4 inch to match adjacent floor elevations. Prepare, mix, and apply repair topping and primer according to manufacturer's written instructions to produce a smooth, uniform, plane, and level surface.
6. Repair defective areas, except random cracks and single holes 1 inch or less in diameter, by cutting out and replacing with fresh concrete. Remove defective areas with clean, square cuts and expose steel reinforcement with at least a 3/4-inch (19-mm) clearance all around. Dampen concrete surfaces in contact with patching concrete and apply bonding agent. Mix patching concrete of same materials and mixture as original concrete except without coarse aggregate. Place, compact, and finish to blend with adjacent finished concrete. Cure in same manner as adjacent concrete.
7. Repair random cracks and single holes 1 inch or less in diameter with patching mortar. Groove top of cracks and cut out holes to sound concrete and clean off dust, dirt, and loose particles. Dampen cleaned concrete surfaces and apply bonding agent. Place patching mortar before bonding agent has dried. Compact patching mortar and finish to match adjacent concrete. Keep patched area continuously moist for at least 72 hours.

E. Perform structural repairs of concrete, subject to Architect's approval, using epoxy adhesive and patching mortar.

F. Repair materials and installation not specified above may be used, subject to Architect's approval.

3.16 FIELD QUALITY CONTROL

A. Special Inspections: Engage a qualified testing and inspecting agency to perform field tests and inspections and prepare test reports. Coordinate the frequency of tests per requirements of this section.

B. Concrete Tests: Testing of composite samples of fresh concrete obtained according to ASTM C 172 shall be performed according to the following requirements:
1. Testing Frequency: Obtain at least one composite sample for each 50 cu. yd. or fraction thereof of each concrete mixture placed each day.
   a. When frequency of testing will provide fewer than five compressive-strength tests for each concrete mixture, testing

shall be conducted from at least five randomly selected batches or from each batch if fewer than five are used.

2. Slump: ASTM C 143/C 143M; one test at point of placement for each composite sample, but not less than one test for each day's pour of each concrete mixture. Perform additional tests when concrete consistency appears to change.
3. Air Content: ASTM C 231, pressure method, for normal-weight concrete; one test for each composite sample, but not less than one test for each day's pour of each concrete mixture.
4. Concrete Temperature: ASTM C 1064/C 1064M; one test hourly when air temperature is 40 deg F and below and when 80 deg F and above, and one test for each composite sample.
5. Compression Test Specimens: ASTM C 31/C 31M.
   a. Cast and laboratory cure two sets of two standard cylinder specimens for each composite sample.
6. Compressive-Strength Tests: ASTM C 39/C 39M; test one set of two laboratory-cured specimens at 7 days and one set of two specimens at 28 days.
   a. A compressive-strength test shall be the average compressive strength from a set of two specimens obtained from same composite sample and tested at age indicated.
7. When strength of field-cured cylinders is less than 85 percent of companion laboratory-cured cylinders, Contractor shall evaluate operations and provide corrective procedures for protecting and curing in-place concrete.
8. Strength of each concrete mixture will be satisfactory if every average of any three consecutive compressive-strength tests equals or exceeds specified compressive strength and no compressive-strength test value falls below specified compressive strength by more than 500 psi.
9. Test results shall be reported in writing to Architect, concrete manufacturer, and Contractor within 48 hours of testing. Reports of compressive-strength tests shall contain Project identification name and number, date of concrete placement, name of concrete testing and inspecting agency, location of concrete batch in Work, design compressive strength at 28 days, concrete mixture proportions and materials, compressive breaking strength, and type of break for both 7- and 28-day tests.
10. Nondestructive Testing: Impact hammer, sonoscope, or other nondestructive device may be permitted by Architect but will not be used as sole basis for approval or rejection of concrete.
11. Additional Tests: Testing and inspecting agency shall make additional tests of concrete when test results indicate that slump, air entrainment, compressive strengths, or other requirements have not been met, as directed by Architect. Testing and inspecting agency may conduct tests to determine adequacy of concrete by cored cylinders complying with ASTM C 42/C 42M or by other methods as directed by Architect.
12. Additional testing and inspecting, at Contractor's expense, will be performed to determine compliance of replaced or additional work with specified requirements.
13. Correct deficiencies in the Work that test reports and inspections indicate do not comply with the Contract Documents.

END OF SECTION 033000

SECTION 042200 - CONCRETE UNIT MASONRY

PART 1 - GENERAL

1.1 SUMMARY

A. Section Includes:
   1. Concrete masonry units.
   2. Steel reinforcing bars.

1.2 DEFINITIONS

A. CMU(s): Concrete masonry unit(s).

B. Reinforced Masonry: Masonry containing reinforcing steel in grouted cells.

1.3 ACTION SUBMITTALS

A. Product Data: For each type of product.

1.4 INFORMATIONAL SUBMITTALS

A. Material Certificates: For each type and size of product. For masonry units, include [data on material properties] [material test reports substantiating compliance with requirements].

B. Mix Designs: For each type of mortar and grout. Include description of type and proportions of ingredients.
   1. Include test reports for mortar mixes required to comply with property specification. Test according to ASTM C 109/C 109M for compressive strength, ASTM C 1506 for water retention, and ASTM C 91/C 91M for air content.
   2. Include test reports, according to ASTM C 1019, for grout mixes required to comply with compressive strength requirement.

1.5 FIELD CONDITIONS

A. Cold-Weather Requirements: Do not use frozen materials or materials mixed or coated with ice or frost. Do not build on frozen substrates. Remove and replace unit masonry damaged by frost or by freezing conditions. Comply with cold-weather construction requirements contained in TMS 602/ACI 530.1/ASCE 6.

B. Hot-Weather Requirements: Comply with hot-weather construction requirements contained in TMS 602/ACI 530.1/ASCE 6.

PART 2 - PRODUCTS

2.1 UNIT MASONRY, GENERAL

A. Masonry Standard: Comply with TMS 602/ACI 530.1/ASCE 6, except as modified by requirements in the Contract Documents.

B. Defective Units: Referenced masonry unit standards may allow a certain percentage of units to contain chips, cracks, or other defects exceeding limits stated. Do not use units where such defects are exposed in the completed Work.

C. Fire-Resistance Ratings: Comply with requirements for fire-resistance-rated assembly designs indicated.
   1. Where fire-resistance-rated construction is indicated, units shall be listed and labeled by a qualified testing agency acceptable to authorities having jurisdiction.

2.2 CONCRETE MASONRY UNITS

A. Shapes: Provide shapes indicated and as follows, with exposed surfaces matching exposed faces of adjacent units unless otherwise indicated.
   1. Provide special shapes for lintels, corners, jambs, sashes, movement joints, headers, bonding, and other special conditions.

B. CMUs: ASTM C 90.
   1. Unit Compressive Strength: Provide units with minimum average net-area compressive strength of 2800 psi.
   2. Density Classification: Normal weight, unless otherwise indicated.

2.3 CONCRETE LINTELS

A. Concrete Lintels: ASTM C 1623, matching CMUs in color, texture, and density classification; and with reinforcing bars indicated. Provide lintels with net-area compressive strength not less than that of CMUs.

2.4 MORTAR AND GROUT MATERIALS

A. Portland Cement: ASTM C 150/C 150M, Type I or II, except Type III may be used for cold-weather construction. Provide natural color or white cement as required to produce mortar color indicated.

B. Hydrated Lime: ASTM C 207, Type S.

C. Portland Cement-Lime Mix: Packaged blend of portland cement and hydrated lime containing no other ingredients.

D. Aggregate for Mortar: ASTM C 144.
   1. White-Mortar Aggregates: Natural white sand or crushed white stone.
   2. For joints less than 1/4 inch thick, use aggregate graded with 100 percent passing the No. 16 sieve.

E. Aggregate for Grout: ASTM C 404.

F. Cold-Weather Admixture: Nonchloride, noncorrosive, accelerating admixture complying with ASTM C 494/C 494M, Type C, and recommended by manufacturer for use in masonry mortar of composition indicated.
   1. Davis Colors.
   2. Lanxess Corporation.
   3. Solomon Colors Inc.

G. Water: Potable.

2.5 REINFORCEMENT

A. Uncoated-Steel Reinforcing Bars: ASTM A 615/A 615M or ASTM A 996/A 996M, Grade 60. Shop fabricate bars which are shown as bent or hooked.

B. Reinforcing Bar Positioners: Wire units designed to fit into mortar bed joints spanning masonry unit cells and to hold reinforcing bars in center of cells. Units are formed from 0.148-inch steel wire, hot-dip galvanized after fabrication. Provide units designed for number of bars indicated.

C. Masonry-Joint Reinforcement, General: ASTM A 951/A 951M.
1. Wire Size for Side Rods: W1.7 or 0.148-inch diameter.
2. Wire Size for Cross Rods: W1.7 or 0.148-inch diameter.
3. Spacing of Cross Rods: Not more than 16 inches o.c.
4. Single-Wythe Masonry: Either ladder or truss type with single pair of side rods, with at least 5/8-inch cover on the outside face.

2.6 TIES AND ANCHORS

A. Materials: Provide ties and anchors specified in this article that are made from materials that comply with the following unless otherwise indicated:
1. Hot-Dip Galvanized, Carbon-Steel Wire: ASTM A 82/A 82M, with ASTM A 153/A 153M, Class B-2 coating.
2. Steel Sheet, Galvanized after Fabrication: ASTM A 1008/A 1008M, Commercial Steel, with ASTM A 153/A 153M, Class B coating.
3. Steel Plates, Shapes, and Bars: ASTM A 36/A 36M.

B. Adjustable Anchors for Connecting to Structural Steel Framing: Provide anchors that allow vertical or horizontal adjustment but resist tension and compression forces perpendicular to plane of wall.
1. Anchor Section for Welding to Steel Frame: Crimped 1/4-inch-diameter, hot-dip galvanized-steel wire.
2. Tie Section: Triangular-shaped wire tie made from 0.187-inch-diameter, hot-dip galvanized-steel wire.

C. Adjustable Anchors for Connecting to Concrete: Provide anchors that allow vertical or horizontal adjustment but resist tension and compression forces perpendicular to plane of wall.
1. Connector Section: Dovetail tabs for inserting into dovetail slots in concrete and attached to tie section; formed from 0.060-inch- thick steel sheet, galvanized after fabrication.

D. Partition Top Anchors: 0.105-inch- thick metal plate with a 3/8-inch-diameter metal rod 6 inches long welded to plate and with closed-end plastic tube fitted over rod that allows rod to move in and out of tube. Fabricate from steel, hot-dip galvanized after fabrication.

E. Rigid Anchors: Fabricate from steel bars 1-1/2 inches wide by 1/4 inch thick by 24 inches long, with ends turned up 2 inches or with cross pins unless otherwise indicated.

1. Corrosion Protection: Hot-dip galvanized to comply with ASTM A 153/A 153M.

F. Solder and Sealants for Sheet Metal Flashings: As specified in Section 076200 "Sheet Metal Flashing and Trim."

G. Adhesives, Primers, and Seam Tapes for Flashings: Flashing manufacturer's standard products or products recommended by flashing manufacturer for bonding flashing sheets to each other and to substrates.

2.7 MISCELLANEOUS MASONRY ACCESSORIES

A. Compressible Filler: Premolded filler strips complying with ASTM D 1056, Grade 2A1; compressible up to 35 percent; of width and thickness indicated; formulated from neoprene.

B. Preformed Control-Joint Gaskets: Made from styrene-butadiene-rubber compound, complying with ASTM D 2000, Designation M2AA-805 and designed to fit standard sash block and to maintain lateral stability in masonry wall; size and configuration as indicated.

C. Bond-Breaker Strips: Asphalt-saturated felt complying with ASTM D 226/D 226M, Type I (No. 15 asphalt felt).

2.8 MORTAR AND GROUT MIXES

A. General: Do not use admixtures, including pigments, air-entraining agents, accelerators, retarders, water-repellent agents, antifreeze compounds, or other admixtures unless otherwise indicated.
   1. Do not use calcium chloride in mortar or grout.
   2. Use portland cement-lime mortar, unless otherwise indicated.
   3. Add cold-weather admixture (if used) at same rate for all mortar that will be exposed to view, regardless of weather conditions, to ensure that mortar color is consistent.
   4. Limit cementitious materials in mortar for reinforced masonry to Portland cement and lime.

B. Mortar for Unit Masonry: Comply with ASTM C 270, Proportion Specification. Provide the following types of mortar for applications stated unless another type is indicated.

   1. For masonry below grade or in contact with earth, use Type S.
   2. For exterior, above-grade, load-bearing and nonload-bearing walls and parapet walls; for interior load-bearing walls; for interior nonload-bearing partitions; and for other applications where another type is not indicated, use Type N.

C. Grout for Unit Masonry: Comply with ASTM C 476.
   1. Use grout of type indicated or, if not otherwise indicated, of type (fine or coarse) that will comply with TMS 602/ACI 530.1/ASCE 6 for dimensions of grout spaces and pour height.
   2. Proportion grout in accordance with ASTM C 476, Table 1 or paragraph 4.2.2 for specified 28-day compressive strength indicated, but not less than 2000 psi.

3. Provide grout with a slump of 8 to 11 inches as measured according to ASTM C 143/C 143M.

PART 3 - EXECUTION

3.1 INSTALLATION, GENERAL

A. Use full-size units without cutting if possible. If cutting is required to provide a continuous pattern or to fit adjoining construction, cut units with motor-driven saws; provide clean, sharp, unchipped edges. Allow units to dry before laying unless wetting of units is specified. Install cut units with cut surfaces and, where possible, cut edges concealed.

3.2 TOLERANCES

A. Dimensions and Locations of Elements:
1. For dimensions in cross section or elevation, do not vary by more than plus 1/2 inch or minus 1/4 inch.
2. For location of elements in plan, do not vary from that indicated by more than plus or minus 1/2 inch.
3. For location of elements in elevation, do not vary from that indicated by more than plus or minus 1/4 inch in a story height or 1/2 inch total.
4. For elevator shaft, verify tolerances with elevator manufacturer.

B. Lines and Levels:
1. For bed joints and top surfaces of bearing walls, do not vary from level by more than 1/4 inch in 10 feet, or 1/2-inch maximum.
2. For conspicuous horizontal lines, such as lintels, sills, parapets, and reveals, do not vary from level by more than 1/8 inch in 10 feet, 1/4 inch in 20 feet, or 1/2-inch maximum.
3. For vertical lines and surfaces, do not vary from plumb by more than 1/4 inch in 10 feet, 3/8 inch in 20 feet, or 1/2-inch maximum.
4. For conspicuous vertical lines, such as external corners, door jambs, reveals, and expansion and control joints, do not vary from plumb by more than 1/8 inch in 10 feet, 1/4 inch in 20 feet, or 1/2-inch maximum.
5. For lines and surfaces, do not vary from straight by more than 1/4 inch in 10 feet, 3/8 inch in 20 feet, or 1/2-inch maximum.
6. For elevator shaft, verify tolerances with elevator manufacturer.

C. Joints:
1. For bed joints, do not vary from thickness indicated by more than plus or minus 1/8 inch, with a maximum thickness limited to 1/2 inch.
2. For head and collar joints, do not vary from thickness indicated by more than plus 3/8 inch or minus 1/4 inch.
3. For exposed head joints, do not vary from thickness indicated by more than plus or minus 1/8 inch.

3.3 LAYING MASONRY WALLS

A. Lay out walls in advance for accurate spacing of surface bond patterns with uniform joint thicknesses and for accurate location of openings,

movement-type joints, returns, and offsets. Avoid using less-than-half-size units, particularly at corners, jambs, and, where possible, at other locations.

B. Bond Pattern for Exposed Masonry: Unless otherwise indicated, lay exposed masonry in running bond; do not use units with less-than-nominal 4-inch horizontal face dimensions at corners or jambs.

C. Built-in Work: As construction progresses, build in items specified in this and other Sections. Fill in solidly with masonry around built-in items.

D. Fill space between steel frames and masonry solidly with mortar unless otherwise indicated.

E. Where built-in items are to be embedded in cores of hollow masonry units, place a layer of metal lath, wire mesh, or plastic mesh in the joint below, and rod mortar or grout into core.

F. Fill cores in hollow CMUs with grout 24 inches under bearing plates, beams, lintels, posts, and similar items unless otherwise indicated.

3.4 MORTAR BEDDING AND JOINTING

A. Lay hollow CMUs as follows:
1. Bed face shells in mortar and make head joints of depth equal to bed joints.
2. Bed webs in mortar in all courses of piers, columns, and pilasters.
3. Bed webs in mortar in grouted masonry, including starting course on footings.
4. Fully bed entire units, including areas under cells, at starting course on footings where cells are not grouted.

B. Lay solid CMUs with completely filled bed and head joints; butter ends with sufficient mortar to fill head joints and shove into place. Do not deeply furrow bed joints or slush head joints.

C. Tool exposed joints slightly concave when thumbprint hard, using a jointer larger than joint thickness unless otherwise indicated.

D. Cut joints flush for masonry walls to receive plaster or other direct-applied finishes (other than paint) unless otherwise indicated.

3.5 MASONRY-JOINT REINFORCEMENT

A. General: Install entire length of longitudinal side rods in mortar with a minimum cover of 5/8 inch on exterior side of walls, 1/2 inch elsewhere. Lap reinforcement a minimum of 6 inches.
1. Space reinforcement not more than 16 inches o.c.
2. Space reinforcement not more than 8 inches o.c. in foundation walls and parapet walls.
3. Provide reinforcement in first and second horizontal joints above and below wall openings and extending 24 inches beyond openings in addition to continuous reinforcement.

4. Place joint reinforcement continuous in first and second joint below top of walls.

B. Interrupt joint reinforcement at control and expansion joints unless otherwise indicated.

C. Provide continuity at wall intersections by using prefabricated T-shaped units.

D. Provide continuity at corners by using prefabricated L-shaped units.

3.6 ANCHORING MASONRY TO STRUCTURAL STEEL AND CONCRETE

A. Anchor masonry to structural steel and concrete, where masonry abuts or faces structural steel or concrete, to comply with the following:
1. Provide an open space not less than 1/2 inch wide between masonry and structural steel or concrete unless otherwise indicated. Keep open space free of mortar and other rigid materials.
2. Anchor masonry with anchors embedded in masonry joints and attached to structure.
3. Space anchors as indicated, but not more than 24 inches o.c. vertically and 36 inches o.c. horizontally.

3.7 REINFORCED UNIT MASONRY INSTALLATION

A. Temporary Formwork and Shores: Construct formwork and shores as needed to support reinforced masonry elements during construction.
1. Construct formwork to provide shape, line, and dimensions of completed masonry as indicated. Make forms sufficiently tight to prevent leakage of mortar and grout. Brace, tie, and support forms to maintain position and shape during construction and curing of reinforced masonry.
2. Do not remove forms and shores until reinforced masonry members have hardened sufficiently to carry their own weight and that of other loads that may be placed on them during construction.

B. Placing Reinforcement: Comply with requirements in TMS 602/ACI 530.1/ASCE 6.

C. Grouting: Do not place grout until entire height of masonry to be grouted has attained enough strength to resist grout pressure.
1. Comply with requirements in TMS 602/ACI 530.1/ASCE 6 for cleanouts and for grout placement, including minimum grout space and maximum pour height.
2. Limit height of vertical grout pours to not more than 60 inches.

3.8 FIELD QUALITY CONTROL

A. Testing and Inspecting: Engage special inspectors to perform tests and inspections and prepare reports. Allow inspectors access to scaffolding and work areas as needed to perform tests and inspections. Retesting of materials that fail to comply with specified requirements shall be done at Contractor's expense.

B. Inspections: Special inspections according to Level 2 in the “International Building Code,” 2006 ed.

1. Begin masonry construction only after inspectors have verified proportions of site-prepared mortar.
2. Place grout only after inspectors have verified compliance of grout spaces and of grades, sizes, and locations of reinforcement.
3. Place grout only after inspectors have verified proportions of site-prepared grout.

C. Testing Prior to Construction: One set of tests.

D. Testing Frequency: One set of tests for each 5000 sq. ft. of wall area or portion thereof.

E. Concrete Masonry Unit Test: For each type of unit provided, according to ASTM C 140 for compressive strength.

F. Mortar Aggregate Ratio Test (Proportion Specification): For each mix provided, according to ASTM C 780.

G. Grout Test (Compressive Strength): For each mix provided, according to ASTM C 1019.

H. Prism Test: For each type of construction provided, according to ASTM C 1314 at seven days and at 28 days.

3.9 PARGING

A. Parge exterior faces of below-grade masonry walls, where indicated, in two uniform coats to a total thickness of 3/4 inch. Dampen wall before applying first coat, and scarify first coat to ensure full bond to subsequent coat.

B. Use a steel-trowel finish to produce a smooth, flat, dense surface with a maximum surface variation of 1/8 inch per foot. Form a wash at top of parging and a cove at bottom.

C. Damp-cure parging for at least 24 hours and protect parging until cured.

3.10 REPAIRING, POINTING, AND CLEANING

A. In-Progress Cleaning: Clean unit masonry as work progresses by dry brushing to remove mortar fins and smears before tooling joints.

B. Final Cleaning: After mortar is thoroughly set and cured, clean exposed masonry as follows:
1. Test cleaning methods on sample wall panel; leave one-half of panel uncleaned for comparison purposes.
2. Clean concrete masonry by applicable cleaning methods indicated in NCMA TEK 8-4A.

3.11 MASONRY WASTE DISPOSAL

A. Waste Disposal as Fill Material: Dispose of clean masonry waste, including excess or soil-contaminated sand, waste mortar, and broken

masonry units, by crushing and mixing with fill material as fill is placed.

1. Do not dispose of masonry waste as fill within 18 inches of finished grade.

B. Masonry Waste Recycling: Return broken CMUs not used as fill to manufacturer for recycling.

C. Excess Masonry Waste: Remove excess clean masonry waste that cannot be used as fill, as described above or recycled, and other masonry waste, and legally dispose of off Owner's property.

END OF SECTION 042200

SECTION 053100 - STEEL DECKING

PART 1 - GENERAL

1.1 SUMMARY

A. Section Includes:
   1. Composite floor deck.

B. Related Requirements: Section 033000 “Cast-in-Place Concrete” for normal-weight and lightweight structural concrete fill over steel deck.

1.2 ACTION SUBMITTALS

A. Product Data: For each type of deck, accessory, and product indicated.

B. Shop Drawings:
   1. Include layout and types of deck panels, anchorage details, reinforcing channels, pans, cut deck openings, special jointing, accessories, and attachments to other construction.

1.3 INFORMATIONAL SUBMITTALS

A. Welding certificates.

B. Product Test Reports: Based on evaluation of comprehensive tests performed by a qualified testing agency, indicating that each of the following complies with requirements:
   1. Power-actuated mechanical fasteners.

C. Evaluation reports: For steel deck.

D. Field quality-control reports.

1.4 QUALITY ASSURANCE

A. Testing Agency Qualifications: Qualified according to ASTM E 329 for testing indicated.

B. Welding Qualifications: Qualify procedures and personnel according to AWS D1.3, "Structural Welding Code - Sheet Steel."

1.5 DELIVERY, STORAGE, AND HANDLING

A. Protect steel deck from corrosion, deformation, and other damage during delivery, storage, and handling.

B. Stack steel deck on platforms or pallets and slope to provide drainage. Protect with a waterproof covering and ventilate to avoid condensation.

PART 2 - PRODUCTS

2.1 PERFORMANCE REQUIREMENTS

A. AISI Specifications: Comply with calculated structural characteristics of steel deck according to AISI's "North American Specification for the Design of Cold-Formed Steel Structural Members."

B. Fire-Resistance Ratings: Comply with ASTM E 199; testing by a qualified testing agency. Identify products with appropriate markings of applicable testing agency.
   1. Indicate design designations from UL’s “Fire Resistance Directory” or from the listings of another qualified testing agency.

2.2 COMPOSITE FLOOR DECK

A. Manufacturers: Subject to compliance with requirements, provide products by one of the following:
   1. Canam United States; Canam Group Inc.
   2. CMC Joist & Deck
   3. Epic Metals Corporation
   4. New Millennium Building Systems, LLC.
   5. Nucor Corp.; Vulcraft Group
   6. Wheeling Corrugating Company; Div. of Wheeling-Pittsburgh Steel Corporation

B. Composite Floor Deck: Fabricate panels, with integrally embossed or raised pattern ribs and interlocking side laps, to comply with "SDI Specifications and Commentary for Composite Steel Floor Deck," in SDI Publication No. 31, with the minimum section properties indicated, and with the following:
   1. Galvanized-Steel Sheet: ASTM A 653/A 653M, Structural Steel (SS), Grade 33, G60 zinc coating.
   2. Profile Depth: As indicated on plans.
   3. Design Uncoated-Steel Thickness: As indicated on plans.

2.3 ACCESSORIES

A. General: Provide manufacturer's standard accessory materials for deck that comply with requirements indicated.

B. Mechanical Fasteners: Corrosion-resistant, low-velocity, power-actuated or pneumatically driven carbon-steel fasteners; or self-drilling, self-threading screws.

C. Side-Lap Fasteners: Corrosion-resistant, hexagonal washer head; self-drilling, carbon-steel screws, No. 10 minimum diameter.

D. Flexible Closure Strips: Vulcanized, closed-cell, synthetic rubber.

E. Miscellaneous Sheet Metal Deck Accessories: Steel sheet, minimum yield strength of 33,000 psi, not less than 0.0359-inch design uncoated thickness, of same material and finish as deck; of profile indicated or required for application.

F. Pour Stops and Girder Fillers: Steel sheet, minimum yield strength of 33,000 psi (230 MPa), of same material and finish as deck, and of thickness and profile recommended by SDI Publication No. 31 for overhang and slab depth.

G. Weld Washers: Uncoated steel sheet, shaped to fit deck rib 0.0747 inch thick, with factory-punched hole of 3/8-inch minimum diameter.

H. Galvanizing Repair Paint: ASTM A 780.

I. Repair Paint: Manufacturer's standard rust-inhibitive primer of same color as primer.

PART 3 - EXECUTION

3.1 INSTALLATION, GENERAL

A. Install deck panels and accessories according to applicable specifications and commentary in SDI Publication No. 31, manufacturer's written instructions, and requirements in this Section.

B. Install temporary shoring before placing deck panels if required to meet deflection limits.

C. Place deck panels on supporting frame and adjust to final position with ends accurately aligned and bearing on supporting frame before being permanently fastened. Do not stretch or contract side-lap interlocks.

D. Place deck panels flat and square and fasten to supporting frame without warp or deflection.

E. Cut and neatly fit deck panels and accessories around openings and other work projecting through or adjacent to deck.

F. Provide additional reinforcement and closure pieces at openings as required for strength, continuity of deck, and support of other work.

G. Comply with AWS requirements and procedures for manual shielded metal arc welding, appearance and quality of welds, and methods used for correcting welding work.

H. Mechanical fasteners may be used in lieu of welding to fasten deck. Locate mechanical fasteners and install according to deck manufacturer's written instructions.

I. No loads shall be permitted to be hung from metal decking. All hangers shall be hung directly from structural steel or supplementary members.

J. Pour Stops and Girder Fillers: Weld steel-sheet pour stops and girder fillers to supporting structure according to SDI recommendations unless otherwise indicated.

3.2 FLOOR-DECK INSTALLATION

A. Fasten floor-deck panels to steel supporting members by arc spot (puddle) welds of the surface diameter indicated and as follows:
   1. Weld Diameter: 5/8 inch, nominal.
   2. Weld Spacing: Weld edge ribs of panels at each support. Space additional welds an average of 12 inches apart, but not more than 18 inches apart.
   3. Weld Washers: Install weld washers at each weld location.

B. Side-Lap and Perimeter Edge Fastening; Fasten side laps and perimeter edges of panels between supports, at intervals not exceeding the lesser of half of the span or 36 inches, and as follows:
   1. Mechanically fasten with self-drilling, No. 10 diameter or larger, carbon-steel screws.

C. End Bearing: Install deck ends over supporting frame with a minimum end bearing of 1-1/2 inches, unless otherwise indicated, with end joints as follows:
   1. End Joints: Butted.

D. Pour Stops and Girder Fillers: Weld steel sheet pour stops and girder fillers to supporting structure according to SDI recommendations unless otherwise indicated.

E. Floor-Deck Closures: Weld steel sheet column closures, cell closures, and Z-closures to deck, according to SDI recommendations, to provide tight-fitting closures at open ends of ribs and sides of deck.

3.3 FIELD QUALITY CONTROL

A. Testing Agency: Engage a qualified testing agency to perform tests and inspections.

B. Field welds will be subject to inspection.

C. Testing agency will report inspection results promptly and in writing to Owner and Architect.

D. Remove and replace work that does not comply with specified requirements.

E. Additional inspecting, at Contractor's expense, will be performed to determine compliance of corrected work with specified requirements.

3.4 PROTECTION

A. Galvanizing Repairs: Prepare and repair damaged galvanized coatings on both surfaces of deck with galvanized repair paint according to ASTM A 780 and manufacturer's written instructions.

END OF SECTION 053100

SECTION 054000 - COLD-FORMED METAL FRAMING

PART 1 - GENERAL

1.1 SUMMARY

A. Section Includes:
   1. Load-bearing wall framing.

1.2 ACTION SUBMITTALS

A. Product Data: For each type of cold-formed steel framing product and accessory.

B. Shop Drawings:
   1. Include layout, spacings, sizes, thicknesses, and types of cold-formed steel framing; fabrication; and fastening and anchorage details, including mechanical fasteners.
   2. Indicate reinforcing channels, opening framing, supplemental framing, strapping, bracing, bridging, splices, accessories, connection details, and attachment to adjoining work.

1.3 INFORMATIONAL SUBMITTALS

A. Qualification Data: For testing agency, upon request.

B. Welding certificates.

C. Product test reports: From a qualified testing agency, unless otherwise stated, indicating that each of the following complies with requirements, based on evaluation of comprehensive tests for current products:
   1. Steel sheet.
   2. Expansion anchors.
   3. Power-actuated anchors.
   4. Mechanical fasteners.
   5. Vertical deflection clips.

D. Research/Evaluation reports: For cold-formed metal framing.

1.4 QUALITY ASSURANCE

A. Testing Agency Qualifications: An independent testing agency, acceptable to the authorities having jurisdiction, qualified according to ASTM E329 to conduct the testing indicated.

B. Product Tests: Mill certificates or data from a qualified independent testing agency, indicating steel sheet complies with requirements, including base-metal thickness, yield strength, tensile strength, total elongation, chemical requirements, and metallic-coating thickness.

C. Welding Qualifications: Qualify procedures and personnel according to AWS D1.3/D1.3M, "Structural Welding Code - Sheet Steel."

D. Fire-Test-Response Characteristics: Where indicated, provide cold-formed metal framing identical to that of assemblies tested for fire resistance per ASTM E 119 by a testing and inspecting agency acceptable to authorities having jurisdiction.

E. AISI Specifications and Standards: Comply with AISI's "North American Specification for the Design of Cold-Formed Steel Structural Members" and its "Standard for Cold-Formed Steel Framing – General Provisions."

1.5 DELIVERY, STORAGE, AND HANDLING

A. Protect cold-formed metal framing from corrosion, deformation, and other damage during delivery, storage, and handling.

B. Store cold-formed metal framing, protect with a waterproof covering, and ventilate to avoid condensation.

PART 2 - PRODUCTS

2.1 MANUFACTURERS

A. Available Manufacturers: Subject to compliance with requirements, manufacturers offering cold-formed metal framing that may be incorporated into the Work include, but are not limited to, the following:
1. Clark Steel Framing.
2. Dietrich Metal Framing; a Worthington Industries Company.
3. Steel Construction Systems.
4. United Metal Products, Inc.

2.2 PERFORMANCE REQUIREMENTS

A. AISI Specifications and Standards: Unless more stringent requirements are indicated, comply with AISI S100 and AISI S200.

B. Fire-Resistance Ratings: Comply with ASTM E 119; testing by a qualified testing agency.
1. Indicate design designations from UL's "Fire Resistance Directory" or from the listings of another qualified testing agency.

2.3 COLD-FORMED STEEL FRAMING, GENERAL

A. Steel Sheet: ASTM A 1003/A 1003M, Structural Grade, Type H, metallic coated, of grade and coating weight as follows:
1. Grade: As required by structural performance and indicated on plans.
2. Coating: G60.

B. Steel Sheet for Vertical Deflection or Drift Clips: ASTM A 653/A 653M, structural steel, zinc coated, of grade and coating as follows:
1. Grade: As required by structural performance.
2. Coating: G60.

2.4 LOAD-BEARING WALL FRAMING

A. Steel Studs: Manufacturer's standard C-shaped steel studs, of web depths indicated, punched, with stiffened flanges, and as follows:
   1. Minimum Base-Metal Thickness: as indicated on plans.
   2. Flange Width: as indicated on plans.

B. Steel Track: Manufacturer's standard U-shaped steel track, of web depths indicated, unpunched, with straight flanges, and matching minimum base-metal thickness of steel studs.

C. Steel Box or Back-to-Back Headers: Manufacturer's standard C-shapes used to form header beams, of web depths indicated, unpunched, with stiffened flanges, and as follows:
   1. Minimum Base-Metal Thickness: as indicated on plans.
   2. Flange Width: as indicated on plans.

2.5 FRAMING ACCESSORIES

A. Fabricate steel-framing accessories from steel sheet, ASTM A 1003/A 1003M, Structural Grade, Type H, metallic coated, of same grade and coating weight used for framing members.

B. Provide accessories of manufacturer's standard thickness and configuration, as follows:
   1. Supplementary framing.
   2. Bracing, bridging, and solid blocking.
   3. Web stiffeners.
   4. Anchor clips.
   5. End clips.
   6. Foundation clips.
   7. Gusset plates.
   8. Stud kickers, knee braces, and girts.

2.6 ANCHORS, CLIPS, AND FASTENERS

A. Steel Shapes and Clips: ASTM A 36/A 36M, zinc coated by hot-dip process according to ASTM A 123/A 123M.

B. Anchor Bolts: ASTM F 1554, Grade 36, threaded carbon-steel hex-headed bolts and carbon-steel nuts; and flat, hardened-steel washers; zinc coated by hot-dip process according to ASTM A 153/A 153M, Class C.

C. Expansion Anchors: Fabricated from corrosion-resistant materials, with allowable load or strength design capacities calculated according to ICC-ES AC193 and ACI 318 greater than or equal to the design load, as determined by testing per ASTM E 488 conducted by a qualified testing agency.

D. Power-Actuated Anchors: Fastener system of type suitable for application indicated, fabricated from corrosion-resistant materials, with allowable load capacities calculated according to ICC-ES AC70, greater than or equal to the design load, as determined by testing per ASTM E 1190 conducted by a qualified testing agency.

E. Mechanical Fasteners: ASTM C 1513, corrosion-resistant-coated, self-drilling, self-tapping, steel drill screws.
   1. Head Type: Low-profile head beneath sheathing, manufacturer's standard elsewhere.

F. Welding Electrodes: Comply with AWS standards.

2.7 MISCELLANEOUS MATERIALS

A. Galvanizing Repair Paint: ASTM A 780.

B. Nonmetallic, Nonshrink Grout: Premixed, nonmetallic, noncorrosive, nonstaining grout containing selected silica sands, portland cement, shrinkage-compensating agents, and plasticizing and water-reducing agents, complying with ASTM C 1107/C 1107M, with fluid consistency and 30-minute working time.

C. Shims: Load bearing, high-density multimonomer plastic, and nonleaching; or of cold-formed steel of same grade and coating as framing members supported by shims.

D. Sealer Gaskets: Closed-cell neoprene foam, 1/4 inch thick, selected from manufacturer's standard widths to match width of bottom track or rim track members.

2.8 FABRICATION

A. Fabricate cold-formed metal framing and accessories plumb, square, and true to line, and with connections securely fastened, according to referenced AISI’s specifications and standards, manufacturer’s written instructions, and requirements in this Section.
   1. Fabricate framing assemblies using jigs or templates.
   2. Cut framing members by sawing or shearing; do not torch cut.
   3. Fasten cold-formed metal framing members by welding, screw fastening, clinch fastening, or riveting as standard with fabricator. Wire tying of framing members is not permitted.
      a. Comply with AWS D1.3 requirements and procedures for welding, appearance, and quality of welds, and methods used in correcting welding work.
      b. Locate mechanical fasteners and install according to Shop Drawings, with screw penetrating joined members by not less than three exposed screw threads.
   4. Fasten other materials to cold-formed metal framing by welding, bolting, or screw fastening, according to Shop Drawings.

B. Reinforce, stiffen, and brace framing assemblies to withstand handling, delivery, and erection stresses. Lift fabricated assemblies to prevent damage or permanent distortion.

C. Fabrication Tolerances: Fabricate assemblies level, plumb, and true to line to a maximum allowable tolerance variation of 1/8 inch in 10 feet and as follows:
   1. Spacing: Space individual framing members no more than plus or minus 1/8 inch from plan location. Cumulative error shall not exceed minimum fastening requirements of sheathing or other finishing materials.

D. Squareness: Fabricate each cold-formed metal framing assembly to a maximum out-of-square tolerance of 1/8 inch.

PART 3 - EXECUTION

3.1 PREPARATION

A. Install load bearing shims or grout between the underside of load-bearing wall bottom track and the top of foundation wall or slab at locations with a gap larger than 1/4 inch to ensure a uniform bearing surface on supporting concrete or masonry construction.

B. Install sealer gaskets at the underside of wall bottom track or rim track and at the top of foundation wall or slab at stud or joist locations.

C. Before sprayed fire-resistive materials are applied, attach continuous angles, supplementary framing, or tracks to structural members indicated to receive sprayed fire-resistive materials.

D. After applying sprayed fire-resistive materials, remove only as much of these materials as needed to complete installation of cold-formed framing without reducing thickness of fire-resistive materials below that are required to obtain fire-resistance rating indicated. Protect remaining fire-resistive materials from damage.

3.2 INSTALLATION, GENERAL

A. Cold-formed steel framing may be shop or field fabricated for installation, or it may be field assembled.

B. Install cold-formed steel framing according to AISI’s “Standard for Cold-Formed Steel Framing – General Provisions” and to manufacturer's written instructions unless more stringent requirements are indicated.

C. Install shop- or field-fabricated, cold-formed framing and securely anchor to supporting structure.
   1. Screw, bolt, or weld wall panels at horizontal and vertical junctures to produce flush, even, true-to-line joints with maximum variation in plane and true position between fabricated panels not exceeding 1/16 inch.

D. Install cold-formed steel framing and accessories plumb, square, and true to line, and with connections securely fastened.
   1. Cut framing members by sawing or shearing; do not torch cut.
   2. Fasten cold-formed metal framing members by welding, screw fastening, clinch fastening, or riveting. Wire tying of framing members is not permitted.
      a. Comply with AWS D1.3 requirements and procedures for welding, appearance and quality of welds, and methods used in correcting welding work.
      b. Locate mechanical fasteners and install according to Shop Drawings, and complying with requirements for spacing, edge distance, and screw penetration.

E. Install framing members in one-piece lengths, unless splice connections are indicated for track or tension members.

F. Install temporary bracing and supports to secure framing and support loads comparable in intensity to those for which structure was designed. Maintain braces and supports in place, undisturbed, until entire integrated supporting structure has been completed and permanent connections to framing are secured.

G. Do not bridge building expansion joints with cold-formed steel framing. Independently frame both sides of joints.

H. Install insulation, specified in Section 072100 "Thermal Insulation," in built-up exterior framing members, such as headers, sills, boxed joists, and multiple studs at openings, that are inaccessible on completion of framing work.

I. Fasten hole reinforcing plate over web penetrations that exceed size of manufacturer's approved or standard punched openings.

J. Erection Tolerances: Install cold-formed steel framing level, plumb, and true to line to a maximum allowable tolerance variation of 1/8 inch in 10 feet and as follows:
   1. Space individual framing members no more than plus or minus 1/8 inch from plan location. Cumulative error shall not exceed minimum fastening requirements of sheathing or other finishing materials.

3.3 LOAD-BEARING WALL INSTALLATION

A. Install continuous top and bottom tracks sized to match studs. Align tracks accurately and securely anchor at corners and ends, and at spacings as follows:
   1. Anchor Spacing: To match stud spacing.

B. Squarely seat studs against top and bottom tracks with gap not exceeding of 1/8 inch between the end of wall framing member and the web of track. Fasten both flanges of studs to top and bottom tracks. Space studs as follows:
   1. Stud Spacing: as indicated on drawings.

C. Set studs plumb, except as needed for diagonal bracing or required for nonplumb walls or warped surfaces and similar configurations.

D. Align studs vertically where floor framing interrupts wall-framing continuity. Where studs cannot be aligned, continuously reinforce track to transfer loads.

E. Align floor and roof framing over studs. Where framing cannot be aligned, continuously reinforce track to transfer loads.

F. Anchor studs abutting structural columns or walls, including masonry walls, to supporting structure as indicated.

G. Install headers over wall openings wider than stud spacing. Locate headers above openings as indicated. Fabricate headers of compound

shapes indicated or required to transfer load to supporting studs, complete with clip-angle connectors, web stiffeners, or gusset plates.

1. Frame wall openings with not less than a double stud at each jamb of frame as indicated on Shop Drawings. Fasten jamb members together to uniformly distribute loads.
2. Install runner tracks and jack studs above and below wall openings. Anchor tracks to jamb studs with clip angles or by welding, and space jack studs same as full-height wall studs.

H. Install supplementary framing, blocking, and bracing in stud framing indicated to support fixtures, equipment, services, casework, heavy trim, furnishings, and similar work requiring attachment to framing.

1. If type of supplementary support is not indicated, comply with stud manufacturer's written recommendations and industry standards in each case, considering weight or load resulting from item supported.

I. Install horizontal bridging in stud system, spaced vertically 48 inches. Fasten at each stud intersection.

1. Bridging: Cold-rolled steel channel, welded or mechanically fastened to webs of punched studs with a minimum of two screws into each flange of the clip angle for framing members up to 6 inches deep.
2. Bridging: Combination of flat, taut, steel sheet straps of width and thickness indicated and stud-track solid blocking of width and thickness to match studs. Fasten flat straps to stud flanges and secure solid blocking to stud webs or flanges.
3. Bridging: Proprietary bridging bars installed according to manufacturer's written instructions.

J. Install steel sheet diagonal bracing straps to both stud flanges, terminate at and fasten to reinforced top and bottom tracks. Fasten clip-angle connectors to multiple studs at ends of bracing and anchor to structure.

K. Install miscellaneous framing and connections, including supplementary framing, web stiffeners, clip angles, continuous angles, anchors, and fasteners, to provide a complete and stable wall-framing system.

3.4 FIELD QUALITY CONTROL

A. Testing: Engage a qualified independent testing and inspecting agency to perform field tests and inspections and prepare test reports.

B. Field and shop welds will be subject to testing and inspecting.

C. Testing agency will report test results promptly and in writing to Owner and Architect.

D. Remove and replace work where test results indicate that it does not comply with specified requirements.

E. Additional testing and inspecting, at Contractor's expense, will be performed to determine compliance of replaced or additional work with specified requirements.

3.5 REPAIRS AND PROTECTION

A. Galvanizing Repairs: Prepare and repair damaged galvanized coatings on fabricated and installed cold-formed steel framing with galvanized repair paint according to ASTM A 780 and manufacturer's written instructions.

B. Provide final protection and maintain conditions, in a manner acceptable to manufacturer and installer, that ensure that cold-formed steel framing is without damage or deterioration at time of Substantial Completion.

END OF SECTION 054000

SECTION 055000 - METAL FABRICATIONS

PART 1 - GENERAL

1.1 SUMMARY

A. Section Includes:
   1. Miscellaneous steel framing and supports.
   2. Shelf angles.
   3. Miscellaneous steel trim.
   4. Loose bearing and leveling plates.

B. Products furnished, but not installed, under this Section include the following:
   1. Loose steel lintels.
   2. Anchor bolts, steel pipe sleeves, slotted-channel inserts, and wedge-type inserts indicated to be cast into concrete or built into unit masonry.
   3. Steel weld plates and angles for casting into concrete for applications where they are not specified in other Sections.

1.2 ACTION SUBMITTALS

A. Product Data: For the following:
   1. Paint products.
   2. Grout.

B. Shop Drawings: Show fabrication and installation details.
   1. Include plans, elevations, sections, and details of metal fabrications and their connections. Show anchorage and accessory items.

PART 2 - PRODUCTS

2.1 PERFORMANCE REQUIREMENTS

A. Thermal Movements: Allow for thermal movements from ambient and surface temperature changes acting on exterior metal fabrications by preventing buckling, opening of joints, overstressing of components, failure of connections, and other detrimental effects.
   1. Temperature Change: 120 deg F, ambient; 180 deg F, material surfaces.

2.2 METALS

A. Metal Surfaces, General: Provide materials with smooth, flat surfaces unless otherwise indicated. For metal fabrications exposed to view in the completed Work, provide materials without seam marks, roller marks, rolled trade names, or blemishes.

B. Steel Plates, Shapes, and Bars: ASTM A 36/A 36M.

C. Stainless-Steel Bars and Shapes: ASTM A 276.

D. Steel Tubing: ASTM A 500/A 500M, cold-formed steel tubing.

E. Steel Pipe: ASTM A 53/A 53M, Standard Weight (Schedule 40) unless otherwise indicated.

F. Slotted Channel Framing: Cold-formed metal box channels (struts) complying with MFMA-4.
   1. Size of Channels: 1-5/8 by 1-5/8 inches or as indicated.
   2. Material: Galvanized steel, ASTM A 653/A 653M, commercial steel, Type B, with G90 coating; 0.108-inch nominal thickness.

2.3 FASTENERS

A. General: Unless otherwise indicated, provide Type 304 stainless-steel fasteners for exterior use and zinc-plated fasteners with coating complying with ASTM B 633 or ASTM F 1941, Class Fe/Zn 5, at exterior walls. Select fasteners for type, grade, and class required.
   1. Provide stainless-steel fasteners for fastening aluminum.
   2. Provide stainless-steel fasteners for fastening stainless steel.

B. Anchor Bolts: ASTM F 1554, Grade 36, of dimensions indicated; with nuts, ASTM A 563; and, where indicated, flat washers.

C. Cast-in-Place Anchors in Concrete: Either threaded type or wedge type unless otherwise indicated; galvanized ferrous castings, either ASTM A 47/A 47M malleable iron or ASTM A 27/A 27M cast steel. Provide bolts, washers, and shims as needed, all hot-dip galvanized per ASTM F 2329.

D. Post-Installed Anchors: Torque-controlled expansion anchors or chemical anchors.
   1. Material for Interior Locations: Carbon-steel components zinc plated to comply with ASTM B 633 or ASTM F 1941, Class Fe/Zn 5, unless otherwise indicated.

E. Plain Washers: Round, ASME B18.22.1.

F. Lock Washers: Helical, spring type, ASME B18.21.1.

G. Anchors, General: Anchors capable of sustaining, without failure, a load equal to six times the load imposed when installed in unit masonry and four times the load imposed when installed in concrete, as determined by testing according to ASTM E488, conducted by a qualified independent testing agency.

H. Slotted-Channel Inserts: Cold-formed, hot-dip galvanized-steel box channels (struts) complying with MFMA-4, 1-5/8 by 7/8 inches by length indicated with anchor straps or studs not less than 3 inches long at not more than 8 inches o.c. Provide with temporary filler and tee-head bolts, complete with washers and nuts, all zinc-plated to comply with ASTM B 633, Class Fe/Zn 5, as needed for fastening to inserts.

2.4 MISCELLANEOUS MATERIALS

A. Welding Rods and Bare Electrodes: Select according to AWS specifications for metal alloy welded.

B. Universal Shop Primer: Fast-curing, lead- and chromate-free, universal modified-alkyd primer complying with MPI#79 and compatible with topcoat.
   1. Use primer containing pigments that make it easily distinguishable from zinc-rich primer.

C. Epoxy Zinc-Rich Primer: Complying with MPI#20 and compatible with topcoat.

D. Galvanizing Repair Paint: High-zinc-dust-content paint complying with SSPC-Paint 20 and compatible with paints specified to be used over it.

E. Bituminous Paint: Cold-applied asphalt emulsion complying with ASTM D 1187/D 1187M.

F. Nonshrink, Nonmetallic Grout: Factory-packaged, nonstaining, noncorrosive, nongaseous grout complying with ASTM C 1107/C 1107M. Provide grout specifically recommended by manufacturer for interior and exterior applications.

G. Concrete: Comply with requirements in Section 033000 "Cast-in-Place Concrete" for normal-weight, air-entrained, concrete with a minimum 28-day compressive strength of 4000 psi.

2.5 FABRICATION, GENERAL

A. Shop Assembly: Preassemble items in the shop to greatest extent possible. Use connections that maintain structural value of joined pieces.

B. Cut, drill, and punch metals cleanly and accurately. Remove burrs and ease edges. Remove sharp or rough areas on exposed surfaces.

C. Form exposed work with accurate angles and surfaces and straight edges.

D. Weld corners and seams continuously to comply with the following:
   1. Use materials and methods that minimize distortion and develop strength and corrosion resistance of base metals.
   2. Obtain fusion without undercut or overlap.
   3. Remove welding flux immediately.
   4. At exposed connections, finish exposed welds and surfaces smooth and blended.

E. Form exposed connections with hairline joints, flush and smooth, using concealed fasteners or welds where possible. Locate joints where least conspicuous.

F. Fabricate seams and other connections that are exposed to weather in a manner to exclude water. Provide weep holes where water may accumulate.

G. Cut, reinforce, drill, and tap metal fabrications as indicated to receive finish hardware, screws, and similar items.

H. Provide for anchorage of type indicated; coordinate with supporting structure. Space anchoring devices to secure metal fabrications rigidly in place and to support indicated loads.
   1. Where units are indicated to be cast into concrete or built into masonry, equip with integrally welded steel strap anchors not less than 8 inches from ends and corners of units and 24 inches o.c.

2.6 MISCELLANEOUS FRAMING AND SUPPORTS

A. General: Provide steel framing and supports not specified in other Sections as needed to complete the Work.

B. Fabricate units from steel shapes, plates, and bars of welded construction unless otherwise indicated. Fabricate to sizes, shapes, and profiles indicated and as necessary to receive adjacent construction.

C. Fabricate steel girders for wood frame construction from continuous steel shapes of sizes indicated.
   1. Where wood nailers are attached to girders with bolts or lag screws, drill or punch holes at 24 inches o.c.

D. Galvanize miscellaneous framing and supports where indicated or where exposed to exterior conditions.

E. Prime miscellaneous framing and supports with zinc-rich primer where indicated or at protected, interior locations.

F. Fabricate steel pipe columns for supporting wood frame construction from steel pipe with steel baseplates and top plates as indicated. Drill or punch baseplates and top plates for anchor and connection bolts and weld to pipe with fillet welds all around. Make welds the same size as pipe wall thickness unless otherwise indicated.

2.7 SHELF ANGLES

A. Fabricate shelf angles from steel angles of sizes indicated and for attachment to concrete framing. Provide horizontally slotted holes to receive 3/4-inch bolts, spaced not more than 6 inches from ends and 24 inches o.c., unless otherwise indicated.

B. For cavity walls, provide vertical channel brackets to support angles from backup masonry and concrete.

C. Galvanize shelf angles located in exterior walls.

D. Furnish wedge-type concrete inserts, complete with fasteners, to attach shelf angles to cast-in-place concrete.

2.8 METAL LADDERS

A. General:
   1. For elevator pit ladders, comply with ASME A17.1/CSA B44.

B. Steel Ladders:

1. Space siderails 18 inches apart unless otherwise indicated.
2. Siderails: Continuous, 3/8-by-2-1/2-inch steel flat bars, with eased edges.
3. Rungs: 1-inch- steel bars.
4. Fit rungs in centerline of siderails; plug-weld and grind smooth on outer rail faces.
5. Provide nonslip surfaces on top of each rung.
6. Prime ladders, including brackets and fasteners, with primer specified in Section 099600 "High-Performance Coatings."

2.9 MISCELLANEOUS STEEL TRIM

A. Unless otherwise indicated, fabricate units from steel shapes, plates, and bars of profiles shown with continuously welded joints and smooth exposed edges. Miter corners and use concealed field splices where possible.

B. Provide cutouts, fittings, and anchorages as needed to coordinate assembly and installation with other work.

C. Galvanize exterior miscellaneous steel trim.

D. Prime miscellaneous steel trim with primer specified in Section 099600 "High-Performance Coatings."

2.10 LOOSE BEARING AND LEVELING PLATES

A. Provide loose bearing and leveling plates for steel items bearing on masonry or concrete construction. Drill plates to receive anchor bolts and for grouting.

2.11 LOOSE STEEL LINTELS

A. Fabricate loose steel lintels from steel angles and shapes of size indicated for openings and recesses in masonry walls and partitions at locations indicated.

B. Size loose lintels to provide bearing length at each side of openings equal to 1/12 of clear span but not less than 8 inches unless otherwise indicated.

C. Galvanize loose steel lintels located in exterior walls.

2.12 STEEL WELD PLATES AND ANGLES

A. Provide steel weld plates and angles not specified in other Sections, for items supported from concrete construction as needed to complete the Work. Provide each unit with no fewer than two integrally welded steel strap anchors for embedding in concrete.

2.13 FINISHES, GENERAL

A. Finish metal fabrications after assembly.

B. Comply with NAAMM’s “Metal Finishes Manual for Architectural and Metal Products” for recommendations for applying and designating finishes.

C. Finish exposed surfaces to remove tool and die marks and stretch lines, and to blend into surrounding surfaces.

2.14 STEEL AND IRON FINISHES

A. Galvanizing: Hot-dip galvanize items as indicated to comply with ASTM A 153/A 153M for steel and iron hardware and with ASTM A 123/A 123M for other steel and iron products.

B. Shop prime iron and steel items not indicated to be galvanized unless they are to be embedded in concrete, sprayed-on fireproofing, or masonry, or unless otherwise indicated.
   1. Shop prime with universal shop primer unless zinc-rich primer is indicated.

C. Preparation for Shop Priming: Prepare surfaces to comply with SSPC-SP 6/NACE No. 3, "Commercial Blast Cleaning." SSPC-SP 3, "Power Tool Cleaning." requirements indicated below:
   1. Exterior Items: SSPC-SP 6/NACE No. 3, "Commercial Blast Cleaning."
   2. Items Indicated to Receive Zinc-Rich Primer: SSPC-SP 6/NACE No. 3, "Commercial Blast Cleaning."
   3. Other Items: SSPC-SP 3, "Power Tool Cleaning."

D. Shop Priming: Apply shop primer to comply with SSPC-PA 1, "Paint Application Specification No. 1: Shop, Field, and Maintenance Painting of Steel," for shop painting.

PART 3 - EXECUTION

3.1 INSTALLATION, GENERAL

A. Cutting, Fitting, and Placement: Perform cutting, drilling, and fitting required for installing metal fabrications. Set metal fabrications accurately in location, alignment, and elevation; with edges and surfaces level, plumb, true, and free of rack; and measured from established lines and levels.

B. Fit exposed connections accurately together to form hairline joints. Weld connections that are not to be left as exposed joints but cannot be shop welded because of shipping size limitations. Do not weld, cut, or abrade surfaces of exterior units that have been hot-dip galvanized after fabrication and are for bolted or screwed field connections.

C. Field Welding: Comply with the following requirements:
   1. Use materials and methods that minimize distortion and develop strength and corrosion resistance of base metals.
   2. Obtain fusion without undercut or overlap.
   3. Remove welding flux immediately.
   4. At exposed connections, finish exposed welds and surfaces smooth and blended so no roughness shows after finishing and contour of welded surface matches that of adjacent surface.

D. Fastening to In-Place Construction: Provide anchorage devices and fasteners where metal fabrications are required to be fastened to in-place construction.

E. Provide temporary bracing or anchors in formwork for items that are to be built into concrete, masonry, or similar construction.

F. Corrosion Protection: Coat concealed surfaces of aluminum that will come into contact with grout, concrete, masonry, wood, or dissimilar metals with the following:
   1. Cast Aluminum: Heavy coat of bituminous paint.
   2. Extruded Aluminum: Two coats of clear lacquer.

3.2 INSTALLING MISCELLANEOUS FRAMING AND SUPPORTS

A. General: Install framing and supports to comply with requirements of items being supported, including manufacturers' written instructions and requirements indicated on Shop Drawings.

B. Anchor supports for operable partitions securely to and rigidly brace from building structure.

3.3 INSTALLING BEARING AND LEVELING PLATES

A. Clean concrete and masonry bearing surfaces of bond-reducing materials, and roughen to improve bond to surfaces. Clean bottom surface of plates.

B. Set bearing and leveling plates on wedges, shims, or leveling nuts. After bearing members have been positioned and plumbed, tighten anchor bolts. Do not remove wedges or shims but, if protruding, cut off flush with edge of bearing plate before packing with nonshrink grout. Pack grout solidly between bearing surfaces and plates to ensure that no voids remain.

3.4 ADJUSTING AND CLEANING

A. Touchup Painting: Immediately after erection, clean field welds, bolted connections, and abraded areas. Paint uncoated and abraded areas with the same material as used for shop painting to comply with SSPC-PA 1 for touching up shop-painted surfaces.

B. Galvanized Surfaces: Clean field welds, bolted connections, and abraded areas and repair galvanizing to comply with ASTM A 780/A 780M.

END OF SECTION 055000

SECTION 055113 - METAL PAN STAIRS

PART 1 - GENERAL

1.1 SUMMARY

A. Section Includes:
   1. Preassembled steel stairs with concrete-filled treads.
   2. Steel tube railings attached to metal stairs.
   3. Steel tube handrails attached to walls adjacent to metal stairs.

1.2 ACTION SUBMITTALS

A. Product Data: For metal pan stairs.

B. Shop Drawings: Include plans, elevations, sections, details, and attachments to other work.

C. Delegated-Design Submittal: For stairs and railings, including analysis data signed and sealed by the qualified professional engineer responsible for their preparation.

PART 2 - PRODUCTS

2.1 MANUFACTURERS

A. Alfab Inc.

B. American Stair Inc.

C. Lapeyre Stair Inc.

D. Pacific Stair Corporation

E. Worthington Metal Fabricators.

F. Local fabrication shops with a minimum of five years experience with projects of similar size and slope.

2.2 PERFORMANCE REQUIREMENTS

A. Delegated Design: Engage a qualified professional engineer, as defined in Section 014000 "Quality Requirements," to design stairs and railings.

B. Structural Performance of Stairs: Metal stairs shall withstand the effects of gravity loads and the following loads and stresses within limits and under conditions indicated:
   1. Uniform Load: 100 lbf/sq. ft.
   2. Concentrated Load: 300 lbf applied on an area of 4 sq. in.
   3. Uniform and concentrated loads need not be assumed to act concurrently.
   4. Stair Framing: Capable of withstanding stresses resulting from railing loads in addition to loads specified above.

C. Structural Performance of Railings: Railings shall withstand the effects of gravity loads and the following loads and stresses within limits and under conditions indicated:
   1. Handrails and Top Rails of Guards:
      a. Uniform load of 50 lbf/ft. applied in any direction.
      b. Concentrated load of 200 lbf applied in any direction.
      c. Uniform and concentrated loads need not be assumed to act concurrently.
   2. Infill of Guards:
      a. Concentrated load of 50 lbf applied horizontally on an area of 1 sq. ft.
      b. Infill load and other loads need not be assumed to act concurrently.

D. Seismic Performance of Stairs: Metal stairs shall withstand the effects of earthquake motions determined according to ASCE/SEI 7.
   1. Component Importance Factor: 1.5.

2.3 METALS

A. Metal Surfaces, General: Provide materials with smooth, flat surfaces unless otherwise indicated. For components exposed to view in the completed Work, provide materials without seam marks, roller marks, rolled trade names, or blemishes.

B. Steel Plates, Shapes, and Bars: ASTM A 36/A 36M.

C. Steel Tubing: ASTM A 500 (cold formed) or ASTM A 513.

D. Uncoated, Cold-Rolled Steel Sheet: ASTM A 1008/A 1008M, structural steel, Grade 25, unless another grade is required by design loads; exposed.

E. Uncoated, Hot-Rolled Steel Sheet: ASTM A 1011/A 1011M structural steel, Grade 30, unless another grade is required by design loads.

F. Woven-Wire Mesh: Intermediate-crimp, square pattern, 2-inch woven-wire mesh, made from 0.135-inch nominal diameter wire complying with ASTM A 510.

2.4 FASTENERS

A. Provide zinc-plated fasteners with coating complying with ASTM B 633 or ASTM F 1941, Class Fe/Zn 12 for exterior use, and Class Fe/Zn 5 where built into exterior walls. Select fasteners for type, grade, and class required.

2.5 MISCELLANEOUS MATERIALS

A. Shop Primers: Provide primers that comply with Section 099113 "Exterior Painting," Section 099123 "Interior Painting," and Section 099600 "High-Performance Coatings."

B. Bituminous Paint: Cold-applied asphalt emulsion complying with ASTM D 1187/D 1187M.

C. Concrete Materials and Properties: Comply with requirements in Section 033000 "Cast-in-Place Concrete" for normal-weight, air-entrained, ready-mix concrete with a minimum 28-day compressive strength of 3000 psi unless otherwise indicated.

D. Welded Wire Reinforcement: ASTM A 185/A 185M, 6 by 6 inches, W1.4 by W1.4, unless otherwise indicated.

2.6 FABRICATION, GENERAL

A. Provide complete stair assemblies, including metal framing, hangers, struts, railings, clips, brackets, bearing plates, and other components necessary to support and anchor stairs and platforms on supporting structure.
   1. Join components by welding unless otherwise indicated.
   2. Use connections that maintain structural value of joined pieces.

B. Preassembled Stairs: Assemble stairs in shop to greatest extent possible. Disassemble units only as necessary for shipping and handling limitations. Clearly mark units for reassembly and coordinated installation.

C. Cut, drill, and punch metals cleanly and accurately. Remove burrs and ease edges to a radius of approximately 1/32 inch unless otherwise indicated. Remove sharp or rough areas on exposed surfaces.

D. Form bent-metal corners to smallest radius possible without causing grain separation or otherwise impairing work.

E. Weld connections to comply with the following:
   1. Use materials and methods that minimize distortion and develop strength and corrosion resistance of base metals.
   2. Obtain fusion without undercut or overlap.
   3. Remove welding flux immediately.
   4. Weld exposed corners and seams continuously unless otherwise indicated.
   5. At exposed connections, finish exposed welds to comply with NOMMA's "Voluntary Joint Finish Standards" for Type 3 welds: partially dressed weld with spatter removed.

F. Form exposed connections with hairline joints, flush and smooth, using concealed fasteners where possible. Locate joints where least conspicuous.

2.7 STEEL-FRAMED STAIRS

A. NAAMM Stair Standard: Comply with "Recommended Voluntary Minimum Standards for Fixed Metal Stairs" in NAAMM AMP 510, "Metal Stairs Manual," Commercial Class, unless more stringent requirements are indicated.

B. Stair Framing:
   1. Fabricate stringers of steel channels.
      a. Provide closures for exposed ends of channel stringers.

2. Construct platforms of steel channel headers and miscellaneous framing members as needed to comply with performance requirements.
3. Weld or bolt stringers to headers; weld or bolt framing members to stringers and headers. If using bolts, fabricate and join so bolts are not exposed on finished surface**s.**
4. Where stairs are enclosed by gypsum board assemblies, provide hanger rods or struts to support landings from floor construction above or below. Locate hanger rods and struts where they do not encroach on required stair width and are within the fire-resistance-rated stair enclosure.

C. Metal Pan Stairs: Form risers, subtread pans, and subplatforms to configurations shown from steel sheet of thickness needed to comply with performance requirements, but not less than 0.067 inch.

2.8 STAIR RAILINGS

A. Steel Tube Railings: Fabricate railings to comply with requirements indicated for design, dimensions, details, finish, and member sizes, including wall thickness of tube, post spacings, and anchorage, but not less than that needed to withstand indicated loads.
1. Handrails: 1-1/2 inch- diameter.
2. Guardrails and Posts: 1-1/2-inch- square top and bottom rails and 1-1/2-inch- square posts.
3. Mesh Infill: Woven wire mesh crimped into 1-by-1/2-by-1/8-inch steel channel frames. Orient wire mesh with wires perpendicular and parallel to top rail.

B. Welded Connections: Fabricate railings with welded connections. Cope components at connections to provide close fit, or use fittings designed for this purpose. Weld all around at connections, including at fittings.
1. Finish welds to comply with NOMMA's "Voluntary Joint Finish Standards" for Type 1 welds: no evidence of a welded joint as shown in NAAMM AMP 521.

C. Form changes in direction of railings by bending or by inserting prefabricated elbow fittings.

D. For changes in direction made by bending, use jigs to produce uniform curvature for each repetitive configuration required. Maintain cross section of member throughout entire bend without buckling, twisting, cracking, or otherwise deforming exposed surfaces of components.

E. Close exposed ends of railing members with prefabricated end fittings.

F. Provide wall returns at ends of wall-mounted handrails.

G. Connect posts to stair framing by direct welding.

H. Brackets, Flanges, Fittings, and Anchors: Provide wall brackets, end closures, flanges, miscellaneous fittings, and anchors for interconnecting components and for attaching to other work.

I. Fillers: Provide fillers made from steel plate, or other suitably crush-resistant material, where needed to transfer wall bracket loads through wall finishes to structural supports. Size fillers to suit wall finish thicknesses.

2.9 FINISHES

A. Finish metal stairs after assembly.

B. Preparation for Shop Priming: Prepare uncoated ferrous-metal surfaces to comply with SSPC-SP 3, "Power Tool Cleaning."

C. Apply shop primer to uncoated surfaces of metal stair components, except those with galvanized finishes and those to be embedded in concrete or masonry unless otherwise indicated. Comply with SSPC-PA 1, "Paint Application Specification No. 1: Shop, Field, and Maintenance Painting of Steel," for shop painting.

PART 3 - EXECUTION

3.1 INSTALLING METAL PAN STAIRS

A. Cutting, Fitting, and Placement: Perform cutting, drilling, and fitting required for installing metal stairs. Set units accurately in location, alignment, and elevation, measured from established lines and levels and free of rack.

B. Install metal stairs by welding stair framing to steel structure or to weld plates cast into concrete unless otherwise indicated.

C. Fit exposed connections accurately together to form hairline joints. Weld connections that are not to be left as exposed joints.

D. Field Welding: Comply with requirements for welding in "Fabrication, General" Article.

E. Place and finish concrete fill for treads and platforms to comply with Section 033000 "Cast-in-Place Concrete."

3.2 INSTALLING RAILINGS

A. Adjust railing systems before anchoring to ensure matching alignment at abutting joints. Space posts at spacing indicated or, if not indicated, as required by design loads. Plumb posts in each direction. Secure posts and rail ends to building construction as follows:
   1. Anchor posts to steel by welding to steel supporting members.
   2. Anchor handrail ends to concrete and masonry with steel round flanges welded to rail ends and anchored with postinstalled anchors and bolts.

B. Attach handrails to wall with wall brackets. Locate brackets as indicated or, if not indicated, at spacing required to support structural loads. Secure wall brackets to building construction as required to comply with performance requirements.

3.3 ADJUSTING AND CLEANING

A. Touchup Painting: Immediately after erection, clean field welds, bolted connections, and abraded areas of shop paint, and paint exposed areas with same material as used for shop painting to comply with SSPC-PA 1 for touching up shop-painted surfaces.

END OF SECTION 055113

SECTION 055213 - PIPE AND TUBE RAILINGS

PART 1 - GENERAL

1.1 SUMMARY

A. Section Includes:
   1. Steel pipe and tube railings.

B. Related Requirements:
   1. Section 055112 "Metal Pan Stairs" for steel tube railings associated with metal pan stairs.

1.2 ACTION SUBMITTALS

A. Product Data: For the following:
   1. Railing brackets.
   2. Grout, anchoring cement, and paint products.

B. Shop Drawings: Include plans, elevations, sections, details, and attachments to other work.

C. Samples: For each type of exposed finish required.

D. Delegated-Design Submittal: For railings, including analysis data signed and sealed by the qualified professional engineer responsible for their preparation.

1.3 INFORMATIONAL SUBMITTALS

A. Product Test Reports: For pipe and tube railings, for tests performed by a qualified testing agency, according to ASTM E 894 and ASTM E 935.

PART 2 - PRODUCTS

2.1 MANUFACTURERS

A. Steel Pipe and Tube Railings:
   1. Wagner, R & B, Inc.

2.2 PERFORMANCE REQUIREMENTS

A. Delegated Design: Engage a qualified professional engineer, as defined in Section 014000 "Quality Requirements," to design railings, including attachment to building construction.

B. Structural Performance: Railings, including attachment to building construction, shall withstand the effects of gravity loads and the following loads and stresses within limits and under conditions indicated:
   1. Handrails and Top Rails of Guards:
      a. Uniform load of 50 lbf/ ft. applied in any direction.
      b. Concentrated load of 200 lbf applied in any direction.
      c. Uniform and concentrated loads need not be assumed to act concurrently.

2. Infill of Guards:
   a. Concentrated load of 50 lbf applied horizontally on an area of 1 sq. ft.
   b. Infill load and other loads need not be assumed to act concurrently.

2.3 METALS, GENERAL

A. Brackets, Flanges, and Anchors: Cast or formed metal of same type of material and finish as supported rails unless otherwise indicated.
   1. Provide type of bracket with flange tapped for concealed anchorage to threaded hanger bolt and that provides 1-1/2-inch clearance from inside face of handrail to finished wall surface.

2.4 STEEL AND IRON

A. Tubing: ASTM A 500 (cold formed) or ASTM A 513.

B. Pipe: ASTM A 53/A 53M, Type F or Type S, Grade A, Standard Weight (Schedule 40), unless another grade and weight are required by structural loads.
   1. Provide galvanized finish for exterior installations and where indicated.

C. Plates, Shapes, and Bars: ASTM A 36/A 36M.

D. Woven-Wire Mesh: Intermediate-crimp, diamond pattern, 2-inch woven-wire mesh, made from 0.134-inch- diameter wire complying with ASTM A 510.

2.5 FASTENERS

A. General: Provide the following:
   1. Ungalvanized-Steel Railings: Plated steel fasteners complying with ASTM B 633 or ASTM F 1941, Class Fe/Zn 5 for zinc coating.
   2. Hot-Dip Galvanized Railings: Type 304 stainless-steel or hot-dip zinc-coated steel fasteners complying with ASTM A 153/A 153M or ASTM F 2329 for zinc coating.

B. Post-Installed Anchors: Torque-controlled expansion anchors or chemical anchors capable of sustaining, without failure, a load equal to 6 times the load imposed when installed in unit masonry and 4 times the load imposed when installed in concrete, as determined by testing according to ASTM E 488/E 488M, conducted by a qualified independent testing agency.
   1. Material for Interior Locations: Carbon-steel components zinc-plated to comply with ASTM B 633 or ASTM F 1941, Class Fe/Zn 5, unless otherwise indicated.
   2. Material for Exterior Locations and Where Stainless Steel Is Indicated: Alloy Group 2 stainless-steel bolts, ASTM F 593, and nuts, ASTM F 594.

2.6 MISCELLANEOUS MATERIALS

A. Welding Rods and Bare Electrodes: Select according to AWS specifications for metal alloy welded.

B. Etching Cleaner for Galvanized Metal: Complying with MPI#25.

C. Galvanizing Repair Paint: High-zinc-dust-content paint complying with SSPC-Paint 20 and compatible with paints specified to be used over it.

D. Shop Primers: Provide primers that comply with Section 099113 "Exterior Painting,"Section 099123 "Interior Painting," and Section 099600 "High-Performance Coatings."

E. Bituminous Paint: Cold-applied asphalt emulsion complying with ASTM D 1187/D 1187M.

F. Nonshrink, Nonmetallic Grout: Factory-packaged, nonstaining, noncorrosive, nongaseous grout complying with ASTM C 1107/C 1107M. Provide grout specifically recommended by manufacturer for interior and exterior applications.

2.7 FABRICATION

A. Cut, drill, and punch metals cleanly and accurately. Remove burrs and ease edges to a radius of approximately 1/32 inch unless otherwise indicated. Remove sharp or rough areas on exposed surfaces.

B. Form work true to line and level with accurate angles and surfaces.

C. Welded Connections: Cope components at connections to provide close fit, or use fittings designed for this purpose. Weld all around at connections, including at fittings.
   1. Use materials and methods that minimize distortion and develop strength and corrosion resistance of base metals.
   2. Obtain fusion without undercut or overlap.
   3. Remove flux immediately.
   4. At exposed connections, finish exposed surfaces smooth and blended so no roughness shows after finishing and welded surface matches contours of adjoining surfaces.

D. Form changes in direction by bending or by inserting prefabricated elbow fittings.

E. For changes in direction made by bending, use jigs to produce uniform curvature for each repetitive configuration required. Maintain cross section of member throughout entire bend without buckling, twisting, cracking, or otherwise deforming exposed surfaces of components.

F. Close exposed ends of railing members with prefabricated end fittings.

G. Provide wall returns at ends of wall-mounted handrails unless otherwise indicated.

H. Brackets, Flanges, Fittings, and Anchors: Provide wall brackets, flanges, miscellaneous fittings, and anchors to interconnect railing members to other work unless otherwise indicated.
   1. At brackets and fittings fastened to plaster or gypsum board partitions, provide crush-resistant fillers or other means to transfer loads through wall finishes to structural supports and prevent bracket or fitting rotation and crushing of substrate.

I. Woven-Wire Mesh Infill Panels: Fabricate infill panels from woven-wire mesh crimped into 1-by-1/2-by-1/8-inch metal channel frames. Make wire mesh and frames from same metal as railings in which they are installed.
   1. Orient wire mesh with wires perpendicular and parallel to top rail.

2.8 STEEL AND IRON FINISHES

A. Galvanized Railings:
   1. Hot-dip galvanize exterior steel railings, including hardware, after fabrication.
   2. Comply with ASTM A 123/A 123M for hot-dip galvanized railings.
   3. Comply with ASTM A 153/A 153M for hot-dip galvanized hardware.

B. Preparing Galvanized Railings for Shop Priming: After galvanizing, thoroughly clean railings of grease, dirt, oil, flux, and other foreign matter, and treat with etching cleaner.

C. Preparation for Shop Priming: Prepare uncoated ferrous-metal surfaces to comply with SSPC-SP 6/NACE No. 3, "Commercial Blast Cleaning".

D. Primer Application: Apply shop primer to prepared surfaces of railings unless otherwise indicated. Comply with requirements in SSPC-PA 1, "Shop, Field, and Maintenance Painting of Steel," for shop painting. Primer need not be applied to surfaces to be embedded in concrete or masonry.
   1. Do not apply primer to galvanized surfaces.

PART 3 - EXECUTION

3.1 INSTALLATION, GENERAL

A. Set railings accurately in location, alignment, and elevation; measured from established lines and levels and free of rack.
   1. Do not weld, cut, or abrade surfaces of railing components that are coated or finished after fabrication and that are intended for field connection by mechanical or other means without further cutting or fitting.
   2. Set posts plumb within a tolerance of 1/16 inch in 3 feet.
   3. Align rails so variations from level for horizontal members and variations from parallel with rake of steps and ramps for sloping members do not exceed 1/4 inch in 12 feet.

B. Control of Corrosion: Prevent galvanic action and other forms of corrosion by insulating metals and other materials from direct contact with incompatible materials.
   1. Coat, with a heavy coat of bituminous paint, concealed surfaces of aluminum that are in contact with grout, concrete, masonry, wood, or dissimilar metals.

3.2 ANCHORING POSTS

A. Use metal sleeves preset and anchored into concrete for installing posts. After posts are inserted into sleeves, fill annular space between post and sleeve with nonshrink, nonmetallic grout, mixed and

placed to comply with anchoring material manufacturer's written instructions.

B. Form or core-drill holes not less than 5 inches deep and 3/4 inch larger than OD of post for installing posts in concrete. Clean holes of loose material, insert posts, and fill annular space between post and concrete with nonshrink, nonmetallic grout, mixed and placed to comply with anchoring material manufacturer's written instructions.

C. Anchor posts to metal surfaces with oval flanges, angle type, or floor type as required by conditions, connected to posts and to metal supporting members.

3.3 ATTACHING RAILINGS

A. Attach railings to wall with wall brackets, except where end flanges are used. Locate brackets as indicated or, if not indicated, at spacing required to support structural loads.

B. Secure wall brackets and railing end flanges to building construction as follows:
1. For concrete and solid masonry anchorage, use drilled-in expansion shields and hanger or lag bolts.
2. For hollow masonry anchorage, use toggle bolts.
3. For wood stud partitions, use hanger or lag bolts set into studs or wood backing between studs. Coordinate with carpentry work to locate backing members.
4. For steel-framed partitions, use hanger or lag bolts set into fire-retardant-treated wood backing between studs. Coordinate with stud installation to locate backing members.
5. For steel-framed partitions, use self-tapping screws fastened to steel framing or to concealed steel reinforcements.
6. For steel-framed partitions, use toggle bolts installed through flanges of steel framing or through concealed steel reinforcements.

3.4 ADJUSTING AND CLEANING

A. Touchup Painting: Immediately after erection, clean field welds, bolted connections, and abraded areas of shop paint, and paint exposed areas with the same material as used for shop painting to comply with SSPC-PA 1 requirements for touching up shop-painted surfaces.

B. Galvanized Surfaces: Clean field welds, bolted connections, and abraded areas, and repair galvanizing to comply with ASTM A 780/A 780M.

END OF SECTION 055213

ROUGH CARPENTRY

PART 1 - GENERAL

1.1 RELATED DOCUMENTS

A. Drawings and general provisions of the Contract, including General and Supplementary Conditions and Division 01 Specification Sections, apply to this Section.

1.2 SUMMARY

A. Section Includes:
   1. Framing with dimension lumber.
   2. Framing with engineered wood products.
   3. Rooftop equipment bases and support curbs.
   4. Wood blocking, cants, and nailers.

B. Related Requirements:
   1. Section 061600 "Sheathing" for roof sheathing and subflooring.

1.3 DEFINITIONS

A. Exposed Framing: Framing not concealed by other construction.

B. Dimension Lumber: Lumber of 2 inches nominal or greater but less than 5 inches nominal in least dimension.

C. Timber: Lumber of 5 inches nominal or greater in least dimension.

D. Lumber grading agencies, and the abbreviations used to reference them, include the following:
   1. NeLMA: Northeastern Lumber Manufacturers' Association.
   2. NLGA: National Lumber Grades Authority.
   3. RIS: Redwood Inspection Service.
   4. SPIB: The Southern Pine Inspection Bureau.
   5. WCLIB: West Coast Lumber Inspection Bureau.
   6. WWPA: Western Wood Products Association.

1.4 ACTION SUBMITTALS

A. Product Data: For each type of process and factory-fabricated product. Indicate component materials and dimensions and include construction and application details.
   1. Include data for wood-preservative treatment from chemical treatment manufacturer and certification by treating plant that treated materials comply with requirements. Indicate type of preservative used and net amount of preservative retained.
   2. Include copies of warranties from chemical treatment manufacturers for each type of treatment.

1.5 INFORMATIONAL SUBMITTALS

A. Material Certificates: For dimension lumber specified to comply with minimum allowable unit stresses. Indicate species and grade selected for each use and design values approved by the ALSC Board of Review.

B. Evaluation Reports: For the following, from ICC-ES:
1. Wood-preservative-treated wood.
2. Engineered wood products.
3. Powder-actuated fasteners.
4. Expansion anchors.
5. Metal framing anchors.

1.6 DELIVERY, STORAGE, AND HANDLING

A. Stack lumber flat with spacers beneath and between each bundle to provide air circulation. Protect lumber from weather by covering with waterproof sheeting, securely anchored. Provide for air circulation around stacks and under coverings.

PART 2 - PRODUCTS

2.1 WOOD PRODUCTS, GENERAL

A. Lumber: DOC PS 20 and applicable rules of grading agencies indicated. If no grading agency is indicated, provide lumber that complies with the applicable rules of any rules-writing agency certified by the ALSC Board of Review. Provide lumber graded by an agency certified by the ALSC Board of Review to inspect and grade lumber under the rules indicated.
1. Factory mark each piece of lumber with grade stamp of grading agency.
2. Where nominal sizes are indicated, provide actual sizes required by DOC PS 20 for moisture content specified. Where actual sizes are indicated, they are minimum dressed sizes for dry lumber.
3. Provide dressed lumber, S4S, unless otherwise indicated.

B. Maximum Moisture Content of Lumber: 19 percent unless otherwise indicated.

C. Engineered Wood Products: Provide engineered wood products acceptable to authorities having jurisdiction and for which current model code research or evaluation reports exist that show compliance with building code in effect for Project.
1. Allowable Design Stresses: Provide engineered wood products with allowable design stresses, as published by manufacturer, that meet or exceed those indicated. Manufacturer's published values shall be determined from empirical data or by rational engineering analysis and demonstrated by comprehensive testing performed by a qualified independent testing agency.

2.2 WOOD-PRESERVATIVE-TREATED LUMBER

A. Preservative Treatment by Pressure Process: AWPA U1; Use Category UC2.
   1. Preservative Chemicals: Acceptable to authorities having jurisdiction and containing no arsenic or chromium.

B. Kiln-dry lumber after treatment to a maximum moisture content of 19 percent. Do not use material that is warped or that does not comply with requirements for untreated material.

C. Mark lumber with treatment quality mark of an inspection agency approved by the ALSC Board of Review.

D. Application: Treat items indicated on Drawings, and the following:
   1. Wood cants, nailers, curbs, equipment support bases, blocking, stripping, and similar members in connection with roofing, flashing, vapor barriers, and waterproofing.
   2. Wood sills, sleepers, blocking and similar concealed members in contact with masonry or concrete.
   3. Wood floor plates that are installed over concrete slabs-on-grade.

2.3 DIMENSION LUMBER FRAMING

A. Maximum Moisture Content: 19 percent.

B. Exterior and Load-Bearing Wall: No. 2 grade and any of the following species:
   1. Douglas fir-larch; WCLIB or WWPA.
   2. Douglas fir-south; WWPA.
   3. Douglas fir-larch (north); NLGA.

C. Joists, Rafters, and Other Framing Not Listed Above: No. 2 grade, unless noted otherwise. See plans for locations where more stringent requirement Douglas Fir Select Structural or Southern Yellow Pine No. 2 or Better is specified.
   1. Species:
      a. Southern pine; SPIB.
      b. Douglas fir-larch; WCLIB or WWPA.
      c. Mixed southern pine; SPIB.
      d. Douglas fir-south; WWPA.
      e. Douglas fir-larch (north); NLGA.

2.4 FIRE-RETARDANT-TREATED MATERIALS

A. General: Where fire-retardant-treated materials are indicated, use materials complying with requirements in this article, that are acceptable to authorities having jurisdiction, and with fire-test-response characteristics specified as determined by testing identical products per test method indicated by a qualified testing agency.

B. Fire-Retardant-Treated Lumber and Plywood by Pressure Process: Products with a flame spread index of 25 or less when tested according

to ASTM E 84, and with no evidence of significant progressive combustion when the test is extended an additional 20 minutes, and with the flame front not extending more than 10.5 feet beyond the centerline of the burners at any time during the test.

1. Exterior Type: Treated materials shall comply with requirements specified above for fire-retardant-treated lumber and plywood by pressure process after being subjected to accelerated weathering according to ASTM D 2898. Use for exterior locations and where indicated.
2. Interior Type A: Treated materials shall have a moisture content of 28 percent or less when tested according to ASTM D 3201 at 92 percent relative humidity. Use where exterior type is not indicated.

C. Kiln-dry lumber after treatment to a maximum moisture content of 19 percent. Kiln-dry plywood after treatment to a maximum moisture content of 15 percent.

D. Identify fire-retardant-treated wood with appropriate classification marking of qualified testing agency.

E. Application: Treat items indicated on Drawings, and the following:
1. Framing for raised platforms.
2. Framing for stages.
3. Concealed blocking.
4. Framing for non-load-bearing partitions.
5. Framing for non-load-bearing exterior walls.
6. Roof construction.
7. Plywood backing panels.

2.5 ENGINEERED WOOD PRODUCTS

A. Laminated-Veneer Lumber: Structural composite lumber made from wood veneers with grain primarily parallel to member lengths, evaluated and monitored according to ASTM D 5456 and manufactured with an exterior-type adhesive complying with ASTM D 2559 and containing no urea formaldehyde.
1. Manufacturers: Subject to compliance with requirements, provide products by one of the following:
   a. Boise Cascade Corporation.
   b. Georgia-Pacific.
   c. Louisiana-Pacific Corporation.
   d. Weyerhaeuser Company.
2. Extreme Fiber Stress in Bending, Edgewise: 2900 psi for 12-inch nominal-depth members.
3. Modulus of Elasticity, Edgewise 2,000,000 psi.

2.6 MISCELLANEOUS LUMBER

A. General: Provide miscellaneous lumber indicated and lumber for support or attachment of other construction, including the following:
1. Blocking.
2. Nailers.

B. For items of dimension lumber size, provide Construction or No. 2 grade lumber with 19 percent maximum moisture content of any species.

C. For blocking and nailers used for attachment of other construction, select and cut lumber to eliminate knots and other defects that will interfere with attachment of other work.

2.7 FASTENERS

A. General: Provide fasteners of size and type indicated that comply with requirements specified in this Article for material and manufacture.
   1. Where rough carpentry is exposed to weather, in ground contact, pressure-preservative treated, or in area of high relative humidity, provide fasteners with hot-dip zinc coating complying with ASTM A 153/A 153M.

B. Nails, Brads, and Staples: ASTM F 1667.

C. Power-Driven Fasteners: NES NER-272.

D. Wood Screws: ASME B18.6.1.

E. Lag Bolts: ASME B18.2.1.

F. Bolts: Steel bolts complying with ASTM A 307, Grade A ; with ASTM A 563 hex nuts and, where indicated, flat washers.
   1. Expansion Anchors: Anchor bolt and sleeve assembly of material indicated below with capability to sustain, without failure, a load equal to 6 times the load imposed when installed in unit masonry assemblies and equal to 4 times the load imposed when installed in concrete as determined by testing per ASTM E 488 conducted by a qualified independent testing and inspecting agency.

2.8 METAL FRAMING ANCHORS

A. Manufacturers: Subject to compliance with requirements, provide products by one of the following:
   1. Simpson Strong-Tie Co., Inc.
   2. USP Structural Connectors.

B. Allowable Design Loads: Provide products with allowable design loads, as published by manufacturer, that meet or exceed those indicated. Manufacturer's published values shall be determined from empirical data or by rational engineering analysis and demonstrated by comprehensive testing performed by a qualified independent testing agency.

C. Galvanized-Steel Sheet: Hot-dip, zinc-coated steel sheet complying with ASTM A 653/A 653M, G60 coating designation.
   1. Use for interior locations unless otherwise indicated.

D. Hot-Dip, Heavy-Galvanized Steel Sheet: ASTM A 653/A 653M; structural steel (SS), high-strength low-alloy steel Type A (HSLAS Type A), or high-strength low-alloy steel Type B (HSLAS Type B); G185 coating designation; and not less than 0.036 inch thick.
   1. Use for wood-preservative-treated lumber and where indicated.

E. Stainless-Steel Sheet: ASTM A 666, Type 304.
   1. Use for exterior locations and where indicated.

F. Joist Hangers: U-shaped joist hangers with 2-inch- long seat and 1-1/4-inch- wide nailing flanges at least 85 percent of joist depth.

G. Top Flange Hangers: U-shaped joist hangers, full depth of joist, formed from metal strap with tabs bent to extend over and be fastened to supporting member.

H. Bridging: Rigid, V-section, nailless type, 0.050 inch thick, length to suit joist size and spacing.

I. Rafter Tie-Downs: Bent strap tie for fastening rafters or roof trusses to wall studs below, 1-1/2 inches wide by 0.050 inch thick. Tie fastens to side of rafter or truss, face of top plates, and side of stud below.

J. Rafter Tie-Downs (Hurricane or Seismic Ties): Bent strap tie for fastening rafters or roof trusses to wall studs below, 2-1/4 inches wide by 0.062 inch thick. Tie fits over top of rafter or truss and fastens to both sides of rafter or truss, face of top plates, and side of stud below.

K. Floor-to-Floor Ties: Flat straps, with holes for fasteners, for tying upper floor wall studs to band joists and lower floor studs, 1-1/4 inches wide by 0.050 inch thick by 36 inches long.

L. Hold-Downs: Brackets for bolting to wall studs and securing to foundation walls with anchor bolts or to other hold-downs with threaded rods and designed with first of two bolts placed seven bolt diameters from reinforced base.

2.9 MISCELLANEOUS MATERIALS

A. Sill-Sealer Gaskets: Closed-cell neoprene foam, 1/4 inch thick, selected from manufacturer's standard widths to suit width of sill members indicated.

B. Flexible Flashing: Composite, self-adhesive, flashing product consisting of a pliable, butyl rubber or rubberized-asphalt compound, bonded to a high-density polyethylene film, aluminum foil, or spunbonded polyolefin to produce an overall thickness of not less than 0.025 inch.

C. Adhesives for Gluing Furring to Concrete or Masonry: Formulation complying with ASTM D 3498 that is approved for use indicated by adhesive manufacturer.

1. Adhesives shall have a VOC content of 70 g/L or less when calculated according to 40 CFR 59, Subpart D (EPA Method 24).

PART 3 - EXECUTION

3.1 INSTALLATION, GENERAL

A. Set rough carpentry to required levels and lines, with members plumb, true to line, cut, and fitted. Fit rough carpentry to other construction; scribe and cope as needed for accurate fit. Locate nailers, blocking, and similar supports to comply with requirements for attaching other construction.

B. Framing Standard: Comply with AF&PA's WCD 1, "Details for Conventional Wood Frame Construction," unless otherwise indicated.

C. Framing with Engineered Wood Products: Install engineered wood products to comply with manufacturer's written instructions.

D. Metal Framing Anchors: Install metal framing anchors to comply with manufacturer's written instructions. Install fasteners through each fastener hole.

E. Install sill sealer gasket to form continuous seal between sill plates and foundation walls.

F. Do not splice structural members between supports unless otherwise indicated.

G. Provide blocking and framing as indicated and as required to support facing materials, fixtures, specialty items, and trim.
   1. Provide metal clips for fastening gypsum board or lath at corners and intersections where framing or blocking does not provide a surface for fastening edges of panels. Space clips not more than 16 inches o.c.

H. Provide fire blocking in furred spaces, stud spaces, and other concealed cavities as indicated and as follows:
   1. Fire block furred spaces of walls, at each floor level, at ceiling, and at not more than 96 inches o.c. with solid wood blocking or noncombustible materials accurately fitted to close furred spaces.
   2. Fire block concealed spaces of wood-framed walls and partitions at each floor level, at ceiling line of top story, and at not more than 96 inches o.c. Where fire blocking is not inherent in framing system used, provide closely fitted solid wood blocks of same width as framing members and 2-inch nominal- thickness.
   3. Fire block concealed spaces between floor sleepers with same material as sleepers to limit concealed spaces to not more than 100 sq. ft. and to solidly fill space below partitions.
   4. Fire block concealed spaces behind combustible cornices and exterior trim at not more than 20 feet o.c.

I. Sort and select lumber so that natural characteristics will not interfere with installation or with fastening other materials to lumber. Do not use materials with defects that interfere with function of member or pieces that are too small to use with minimum number of joints or optimum joint arrangement.

J. Comply with AWPA M4 for applying field treatment to cut surfaces of preservative-treated lumber.
   1. Use inorganic boron for items that are continuously protected from liquid water.
   2. Use copper naphthenate for items not continuously protected from liquid water.

K. Securely attach rough carpentry work to substrate by anchoring and fastening as indicated, complying with the following:
   1. Table 2304.9.1, "Fastening Schedule," in ICC's International Building Code.

L. Use steel common nails unless otherwise indicated. Select fasteners of size that will not fully penetrate members where opposite side will be exposed to view or will receive finish materials. Make tight connections between members. Install fasteners without splitting wood. Drive nails snug but do not countersink nail heads unless otherwise indicated.
   1. Use finishing nails unless otherwise indicated. Countersink nail heads and fill holes with wood filler.
   2. Use common nails unless otherwise indicated. Drive nails snug but do not countersink nail heads.

3.2 WALL AND PARTITION FRAMING INSTALLATION

A. General: Provide single bottom plate and double top plates using members of 2-inch nominal thickness whose widths equal that of studs, except single top plate may be used for non-load-bearing partitions. Fasten plates to supporting construction unless otherwise indicated.
   1. For exterior walls, provide 2-by-6-inch nominal- size wood studs spaced 16 inches o.c., unless otherwise indicated.
   2. For interior partitions and walls, provide provide 2-by-4-inch, and 2-by-6-inch nominal- size wood studs, as indicated, spaced 24 inches o.c., unless otherwise indicated.
   3. Provide continuous horizontal blocking at panel joint of shear walls, using members of 2-inch nominal thickness and of same width as wall or partitions.

B. Construct corners and intersections with three or more studs.

C. Frame openings with multiple studs and headers. Provide nailed header members of thickness equal to width of studs. Support headers on jamb studs.
   1. For load-bearing walls, provide double-jamb studs for openings 60 inches and less in width, and triple-jamb studs for wider openings, unless otherwise indicated on the plans. Provide headers of depth indicated.

3.3 FLOOR JOIST FRAMING INSTALLATION

A. General: Install floor joists with crown edge up and support ends of each member with not less than 1-1/2 inches of bearing on wood or metal, or 3 inches on masonry. Attach floor joists as follows:
   1. Where supported on wood members, byusing metal framing anchors.

B. Frame openings with headers and trimmers supported by metal joist hangers; double headers and trimmers where span of header exceeds 48 inches.

C. Do not notch joists. Do not bore holes in joists.

D. Provide solid blocking of 2-inch nominal thickness by depth of joist at ends of joists unless nailed to header or band.

E. Lap members framing from opposite sides of beams, girders, or partitions not less than 4 inches or securely tie opposing members together. Provide solid blocking of 2-inch nominal thickness by depth of joist over supports.

F. Anchor members paralleling masonry with 1/4-by-1-1/4-inch metal strap anchors spaced not more than 96 inches o.c., extending over and fastening to three joists. Embed anchors at least 4 inches into grouted masonry with ends bent at right angles and extending 4 inches beyond bend.

G. Provide solid blocking between joists under jamb studs for openings.

H. Under non-load-bearing partitions, provide double joists separated by solid blocking equal to depth of studs above.
   1. Provide triple joists separated as above, under partitions receiving ceramic tile and similar heavy finishes or fixtures.

I. Provide bridging of type indicated below, at intervals of 96 inches o.c., between joists.
   1. Diagonal wood bridging formed from bevel-cut, 1-by-3-inch nominal- size lumber, double-crossed and nailed at both ends to joists.
   2. Steel bridging installed to comply with bridging manufacturer's written instructions.

3.4 PROTECTION

A. Protect rough carpentry from weather. If, despite protection, rough carpentry becomes wet, apply EPA-registered borate treatment. Apply borate solution by spraying to comply with EPA-registered label.

END OF SECTION 061000

SECTION 061600 - SHEATHING

PART 1 - GENERAL

1.1 RELATED DOCUMENTS

A. Drawings and general provisions of the Contract, including General and Supplementary Conditions and Division 01 Specification Sections, apply to this Section.

1.2 SUMMARY

A. Section Includes:
   1. Wall sheathing.
   2. Roof sheathing.
   3. Subflooring.
   4. Floor underlayment.
   5. Roof nailable substrate.

B. Related Requirements:
   1. Section 061000 - Rough Carpentry.

1.3 INFORMATIONAL SUBMITTALS

A. Evaluation Reports: For following products, from ICC-ES:
   1. Preservative-treated plywood.
   2. Fire-retardant-treated plywood.

1.4 DELIVERY, STORAGE, AND HANDLING

A. Stack panels flat with spacers beneath and between each bundle to provide air circulation. Protect sheathing from weather by covering with waterproof sheeting, securely anchored. Provide for air circulation around stacks and under coverings.

PART 2 - PRODUCTS

2.1 WOOD PANEL PRODUCTS

A. Plywood: Either DOC PS 1 or DOC PS 2 unless otherwise indicated.

B. Oriented Strand Board: DOC PS 2.

C. Thickness: As needed to comply with requirements specified, but not less than thickness indicated.

D. Factory mark panels to indicate compliance with applicable standard.

2.2 PRESERVATIVE-TREATED PLYWOOD

A. Preservative Treatment by Pressure Process: AWPA U1; Use Category UC2 for interior construction not in contact with the ground, Use Category UC3b for exterior construction not in contact with the ground, and Use Category UC4a for items in contact with the ground.
   1. Preservative Chemicals: Acceptable to authorities having jurisdiction and containing no arsenic or chromium.

B. Mark plywood with appropriate classification marking of an inspection agency acceptable to authorities having jurisdiction.

C. Application: Treat items indicated on Drawings and plywood in contact with masonry or concrete or used with roofing, flashing, vapor barriers, and waterproofing.

2.3 FIRE-RETARDANT-TREATED PLYWOOD

A. General: Where fire-retardant-treated materials are indicated, use materials complying with requirements in this article that are acceptable to authorities having jurisdiction and with fire-test-response characteristics specified as determined by testing identical products per test method indicated by a qualified testing agency.

B. Fire-Retardant-Treated Plywood by Pressure Process: Products with a flame-spread index of 25 or less when tested according to ASTM E 84, and with no evidence of significant progressive combustion when the test is extended an additional 20 minutes, and with the flame front not extending more than 10.5 feet (3.2 m) beyond the centerline of the burners at any time during the test.
   1. Use treatment that does not promote corrosion of metal fasteners.
   2. Exterior Type: Treated materials shall comply with requirements specified above for fire-retardant-treated plywood by pressure process after being subjected to accelerated weathering according to ASTM D 2898. Use for exterior locations and where indicated.
   3. Interior Type A: Treated materials shall have a moisture content of 28 percent or less when tested according to ASTM D 3201 at 92 percent relative humidity. Use where exterior type is not indicated.
   4. Design Value Adjustment Factors: Treated lumber plywood shall be tested according ASTM D 5516 and design value adjustment factors shall be calculated according to ASTM D 6305. Span ratings after treatment shall be not less than span ratings specified.

C. Kiln-dry material after treatment to a maximum moisture content of 15 percent. Do not use material that is warped or does not comply with requirements for untreated material.

D. Identify fire-retardant-treated plywood with appropriate classification marking of qualified testing agency.

E. Application: Treat plywood indicated on Drawings, and the following:
   1. Roof and wall sheathing within 48 inches of fire walls.
   2. Roof sheathing.
   3. Subflooring and underlayment for raised platforms.
   4. Blocking as indicated.

2.4 WALL SHEATHING

A. Plywood Wall Sheathing: Exposure 1, Sheathing.
   1. Span Rating: Not less than 32/16.
   2. Nominal Thickness: as indicated.

2.5 ROOF SHEATHING

A. Oriented-Strand-Board Roof Sheathing: Exposure 1, Sheathing.
   1. Span Rating: Not less than 40/20.
   2. Nominal Thickness: as indicated.

2.6 SUBFLOORING AND UNDERLAYMENT

A. Plywood Subflooring: Exposure 1, Sheathing.
   1. Span Rating: Not less than 48/24.
   2. Nominal Thickness: as indicated.

B. Underlayment, General: Provide underlayment in nominal thicknesses indicated.

C. Plywood Underlayment: DOC PS 1, Exterior A-C with fully sanded face.

2.7 FASTENERS

A. General: Provide fasteners of size and type indicated that comply with requirements specified in this article for material and manufacture.
   1. For roof and wall sheathing, provide fasteners with hot-dip zinc coating complying with ASTM A 153/A 153M.

B. Nails, Brads, and Staples: ASTM F 1667.

C. Power-Driven Fasteners: NES NER-272.

D. Wood Screws: ASME B18.6.1.

2.8 MISCELLANEOUS MATERIALS

A. Adhesives for Field Gluing Panels to Framing: Formulation complying with ASTM D 3498 that is approved for use with type of construction panel indicated by manufacturers of both adhesives and panels.
   1. Adhesives shall have a VOC content of 50 g/L or less when calculated according to 40 CFR 59, Subpart D (EPA Method 24).

2. Adhesives shall comply with the testing and product requirements of the California Department of Health Services' "Standard Practice for the Testing of Volatile Organic Emissions from Various Sources Using Small-Scale Environmental Chambers."

PART 3 - EXECUTION

3.1 INSTALLATION, GENERAL

A. Do not use materials with defects that impair quality of sheathing or pieces that are too small to use with minimum number of joints or optimum joint arrangement. Arrange joints so that pieces do not span between fewer than three support members.

B. Cut panels at penetrations, edges, and other obstructions of work; fit tightly against abutting construction unless otherwise indicated.

C. Securely attach to substrate by fastening as indicated, complying with the following:
   1. Table 2304.9.1, "Fastening Schedule," in ICC's "International Building Code."

D. Use common wire nails unless otherwise indicated. Select fasteners of size that will not fully penetrate members where opposite side will be exposed to view or will receive finish materials. Make tight connections. Install fasteners without splitting wood.

E. Coordinate wall and roof sheathing installation with flashing and joint-sealant installation so these materials are installed in sequence and manner that prevent exterior moisture from passing through completed assembly.

F. Do not bridge building expansion joints; cut and space edges of panels to match spacing of structural support elements.

G. Coordinate sheathing installation with installation of materials installed over sheathing so sheathing is not exposed to precipitation or left exposed at end of the workday when rain is forecast.

3.2 WOOD STRUCTURAL PANEL INSTALLATION

A. General: Comply with applicable recommendations in APA Form No. E30, "Engineered Wood Construction Guide," for types of structural-use panels and applications indicated.

B. Fastening Methods: Fasten panels as indicated below:
   1. Subflooring:
      a. Glue and nail to wood framing.
      b. Space panels 1/8 inch apart at edges and ends.
   2. Wall and Roof Sheathing:
      a. Nail to wood framing
      b. Space panels 1/8 inch apart at edges and ends.

3. Underlayment:
   a. Glue and nail to subflooring.
   b. Space panels 1/32 inch apart at edges and ends.
   c. Fill and sand edge joints of underlayment receiving flooring immediately before installing flooring.

END OF SECTION 061600

SECTION 064116 - PLASTIC-LAMINATE-FACED ARCHITECTURAL CABINETS

PART 1 - GENERAL

1.1 SUMMARY

A. Section Includes:
1. Plastic-laminate-faced architectural cabinets.
2. Wood furring, blocking, shims, and hanging strips for installing plastic-laminate-faced architectural cabinets unless concealed within other construction before cabinet installation.

B. Related Requirements:
1. Section 123623.13 "Plastic-Laminate-Clad Countertops."

1.2 ACTION SUBMITTALS

A. Product Data: For each type of product, including panel products, high-pressure decorative laminate, adhesive for bonding plastic laminate and cabinet hardware and accessories.

B. Shop Drawings: Show location of each item, dimensioned plans and elevations, large-scale details, attachment devices, and other components.

C. Samples:
1. Plastic laminates, for each color, pattern, and surface finish.
2. Thermoset decorative panels, for each color, pattern, and surface finish.

1.3 FIELD CONDITIONS

A. Environmental Limitations: Do not deliver or install cabinets until building is enclosed, wet work is complete, and HVAC system is operating and maintaining temperature and relative humidity at occupancy levels during the remainder of the construction period.

PART 2 - PRODUCTS

2.1 PLASTIC-LAMINATE-FACED ARCHITECTURAL CABINETS

A. Quality Standard: Unless otherwise indicated, comply with the "Architectural Woodwork Standards" for grades of architectural plastic-laminate cabinets indicated for construction, finishes, installation, and other requirements.

B. Grade: Custom.

C. Type of Construction: Frameless.

D. Cabinet, Door, and Drawer Front Interface Style: Flush overlay.

E. High-Pressure Decorative Laminate: NEMA LD 3, grades as indicated or if not indicated, as required by woodwork quality standard.
1. Formica Corporation.

2. Lamin-Art, Inc.
3. Panolam Industries International, Inc.
4. Wilsonart International; Div. of Premark International, Inc.
5. Nevamar.

F. Poinite.Laminate Cladding for Exposed Surfaces:
1. Horizontal Surfaces: Grade HGL.
2. Postformed Surfaces: Grade HGP.
3. Vertical Surfaces: Grade VGS.
4. Pattern Direction: Vertically for drawer fronts, doors, and fixed panels.

G. Materials for Semiexposed Surfaces:
1. Surfaces Other Than Drawer Bodies: High-pressure decorative laminate, NEMA LD 3, Grade VGS.
2. Drawer Sides and Backs: Thermoset decorative panels with PVC or polyester edge banding.
3. Drawer Bottoms: Thermoset decorative panels.

H. Dust Panels: 1/4-inch plywood or tempered hardboard above compartments and drawers unless located directly under tops.

I. Colors, Patterns, and Finishes: Provide materials and products that result in colors and textures of exposed laminate surfaces complying with the following requirements:
1. As indicated by laminate manufacturer's designations.
2. Match Architect's sample.
3. As selected by Architect from laminate manufacturer's full range in the following categories:
a. Solid colors, matte finish.
b. Solid colors with core same color as surface, matte finish.
c. Wood grains, matte finish.
d. Patterns, matte finish.

2.2 WOOD MATERIALS

A. Wood Products: Provide materials that comply with requirements of referenced quality standard for each type of woodwork and quality grade specified unless otherwise indicated.
1. Wood Moisture Content: 4 to 9 percent.

B. Composite Wood and Agrifiber Products: Provide materials that comply with requirements of referenced quality standard for each type of woodwork and quality grade specified unless otherwise indicated.
1. Particleboard: ANSI A208.1, Grade M-2-Exterior Glue.
2. Thermoset Decorative Panels: Particleboard or medium-density fiberboard finished with thermally fused, melamine-impregnated decorative paper and complying with requirements of NEMA LD 3, Grade VGL, for test methods 3.3, 3.4, 3.6, 3.8, and 3.10.

2.3 CABINET HARDWARE AND ACCESSORIES

A. General: Provide cabinet hardware and accessory materials associated with architectural cabinets except for items specified in Section 087111 "Door Hardware (Descriptive Specification)."

B. Frameless Concealed Hinges (European Type): BHMA A156.9, B01602, 135 degrees of opening, self-closing.

C. Back-Mounted Pulls: BHMA A156.9, B02011.

D. Wire Pulls: Back mounted, solid metal, 4 inches long, 5/16 inch in diameter.

E. Adjustable Shelf Standards and Supports: See Drawings.

F. Shelf Rests: BHMA A156.9, B04013; metal, two-pin type with shelf hold-down clip.

G. Drawer Slides: BHMA A156.9.
   1. Grade 1HD-100 and Grade 1HD-200: Side mounted; full-extension type; zinc-plated-steel ball-bearing slides.
   2. For drawers more than 3 inches high but not more than 6 inches high and not more than 24 inches wide, provide Grade 1HD-100.
   3. For drawers more than 6 inches high or more than 24 inches wide, provide Grade 1HD-100.
   4. For computer keyboard shelves, provide Grade 1HD-100.
   5. For trash bins not more than 20 inches high and 16 inches wide, provide Grade 1HD-100.

H. Door Locks: BHMA A156.11, E07121.

I. Drawer Locks: BHMA A156.11, E07041.

J. Door and Drawer Silencers: BHMA A156.16, L03011.

K. Exposed Hardware Finishes: For exposed hardware, provide finish that complies with BHMA A156.18 for BHMA finish number indicated.
   1. Dark, Oxidized, Satin Bronze, Oil Rubbed: BHMA 613 for bronze base; BHMA 640 for steel base.

2.4 MISCELLANEOUS MATERIALS

A. Furring, Blocking, Shims, and Hanging Strips: Lumber, kiln dried to less than 15 percent moisture content.

B. Anchors: Select material, type, size, and finish required for each substrate for secure anchorage. Provide metal expansion sleeves or expansion bolts for post-installed anchors. Use nonferrous-metal or hot-dip galvanized anchors and inserts at inside face of exterior walls and at floors.

C. Adhesives: Do not use adhesives that contain urea formaldehyde.

D. Adhesive for Bonding Plastic Laminate: Contact cement.
   1. Adhesive for Bonding Edges: Hot-melt adhesive or adhesive specified above for faces.

2.5 FABRICATION

A. Complete fabrication, including assembly and hardware application, to maximum extent possible before shipment to Project site. Disassemble

components only as necessary for shipment and installation. Where necessary for fitting at site, provide ample allowance for scribing, trimming, and fitting.

B. Shop-cut openings to maximum extent possible to receive hardware, appliances, electrical work, and similar items. Locate openings accurately and use templates or roughing-in diagrams to produce accurately sized and shaped openings. Sand edges of cutouts to remove splinters and burrs.

PART 3 - EXECUTION

3.1 PREPARATION

A. Before installation, condition cabinets to average prevailing humidity conditions in installation areas.

3.2 INSTALLATION

A. Grade: Install cabinets to comply with same grade as item to be installed.

B. Install cabinets level, plumb, true, and straight. Shim as required with concealed shims. Install level and plumb to a tolerance of 1/8 inch in 96 inches.

C. Scribe and cut cabinets to fit adjoining work, refinish cut surfaces, and repair damaged finish at cuts.

D. Anchor cabinets to anchors or blocking built in or directly attached to substrates. Secure with countersunk, concealed fasteners and blind nailing. Use fine finishing nails or finishing screws for exposed fastening, countersunk and filled flush with woodwork.

E. Cabinets: Install without distortion so doors and drawers fit openings properly and are accurately aligned. Adjust hardware to center doors and drawers in openings and to provide unencumbered operation. Complete installation of hardware and accessory items as indicated.
   1. Install cabinets with no more than 1/8 inch in 96-inch sag, bow, or other variation from a straight line.
   2. Fasten wall cabinets through back, near top and bottom, and at ends not more than 16 inches o.c. with No. 10 wafer-head screws sized for not less than 1-1/2-inch penetration into wood framing, blocking, or hanging strips, No. 10 wafer-head sheet metal screws through metal backing or metal framing behind wall finish, toggle bolts through metal backing or metal framing behind wall finish.

END OF SECTION 064116

SECTION 072100 - THERMAL INSULATION

PART 1 - GENERAL

1.1 SUMMARY

A. Section Includes:
   1. Extruded polystyrene foam-plastic board.
   2. Glass-fiber blanket.
   3. Mineral-wool blanket.
   4. Mineral-wool board.
   5. Pourable foam insulation
   6. Spray-foam insulation

1.2 ACTION SUBMITTALS

A. Product Data: For each type of product.

B. Low-emitting product certification.

1.3 INFORMATIONAL SUBMITTALS

A. Product test reports.

B. Research reports.

C. Manufacturer’s certificate certifying insulation provided meets or exceeds specified requirements.

D. Evaluation Report: Evidence of compliance of foam-plastic insulations with International Building Code (IBC), International Residential Code (IRC), International Energy Conservation Code (IECC).

1.4 QUALITY ASSURANCE

A. Manufacturer’s Qualifications: Product produced in an ISO9001 registered factory.

B. Single Source Responsibility: Single source product from one manufacturer.

C. Installer Qualifications: Engage a Manufacturer Licensed Dealer (applicator) who has been trained and certified by Manufacturer.

D. Fire-Test-Response Characteristics: Provide materials specified as determined by testing identical products per test method indicated below by a testing and inspecting agency acceptable to authorities having jurisdiction. Identify materials with appropriate markings of applicable testing and inspecting agency.

   1. Surface-Burning Characteristics: ASTM E 84

E. Toxicity/Hazardous Materials

   1. Provide products that contain no urea-formaldehyde

2. Products and equipment requiring or using CFCs, HCFCs, or HFCs during the manufacturing or application process will not be permitted
3. Provide products that contain no PBDEs

1.5 Warranty

A. Manufacturer’s standard lifetime warranty for pourable and spray-foam products.

PART 2 - PRODUCTS

2.1 EXTRUDED POLYSTYRENE FOAM-PLASTIC BOARD

A. Extruded polystyrene boards in this article are also called "XPS boards."

B. Extruded Polystyrene Board, Type X: ASTM C 578, Type X, 15-psi minimum compressive strength; unfaced; maximum flame-spread and smoke-developed indexes of 25 and 450, respectively, per ASTM E 84.
1. DiversiFoam Products.
2. Dow Chemical Company (The).
3. Owens Corning.
4. Fire Propagation Characteristics: Passes NFPA 285 testing as part of an approved assembly.

2.2 GLASS-FIBER BLANKET

A. Sustainability Requirements: Provide glass-fiber blanket insulation as follows:
1. Free of Formaldehyde: Insulation manufactured with 100 percent acrylic binders and no formaldehyde.
2. Low Emitting: Insulation tested according to ASTM D 5116 and shown to emit less than 0.05-ppm formaldehyde.

B. Glass-Fiber Blanket, Unfaced: ASTM C 665, Type I; with maximum flame-spread and smoke-developed indexes of 25 and 50, respectively, per ASTM E 84; passing ASTM E 136 for combustion characteristics.
1. Certain Teed Corporation.
2. Guardian Building Products, Inc.
3. Johns Manville; a Berkshire Hathaway Company.
4. Knauf Insulation.
5. Owens Corning.

2.3 MINERAL-WOOL BLANKETS

A. Mineral-Wool Blanket, Unfaced: ASTM C 665, Type I (blankets without membrane facing); consisting of fibers; with maximum flame-spread and smoke-developed indexes of 25 and 50, respectively, per ASTM E 84; passing ASTM E 136 for combustion characteristics.
1. Industrial Insulation Group LLC.
2. Roxual Inc.
3. Thermafiber, Inc.; an Ownens Corning Company.

2.4 MINERAL-WOOL BOARD

A. Mineral-Wool Board, Types IA and IB: ASTM C 612, Types IA and IB; foil faced, with maximum flame-spread and smoke-developed indexes of 15 and zero, respectively, per ASTM E 84; passing ASTM E 136 for combustion characteristics. Nominal density of 4 lb/cu. ft.
   1. Industrial Insulation Group LLC.
   2. Roxual Inc.
   3. Thermafiber, Inc.; an Ownens Corning Company.

2.5 POURABLE FOAM INSULATION

A. Basis of Design Product: ICYNENE LD-C-50™ by Icynene Inc. shall be used as shown on drawings in existing exterior stud wall construction. Insulation shall not create sufficient expansion pressure on existing construction so as to create damage. Insulation contractor responsible for any repairs necessary to damaged areas.

B. ICYNENE LD-C-50™ Spray Foam Insulation: Low-density, water-blown, conforming to the following:

   1. Thermal Resistance (R-Value/inch @75 deg F): ASTM C 518; 3.7 hr/sq ft/degree F/BTU

      a. Heat Flow Reduction:

         1) Through 1 inch: 75 percent
         2) Through 3.5 inches 93 percent
         3) Through 5.5 inches 95 percent
         4) Through 10.5 inches 98 percent

   2. Air Permeance (for 2 inches of material): ASTM E 283; <0.02 L/S.m^2 @75 Pa

   3. Air Permeance (for 5.5 inches of material): ASTM E 2178; < 0.02 L/s.m^2 @ 75 Pa
   4. Water Vapor Transmission (for 5.5 inches of material): ASTM E 96; 11 perms [627 ng /(Pa.s.m^2)]
   5. Flame Spread and Smoke Developed Rating: ASTM E 84

      a. Flame Spread: Less than 20
      b. Smoke Development: Less than 400
      c. Oxygen Index 23 percent

   6. Bacterial and Fungal Growth and Food Value: Not a source of food for mold (no growth).

C. Product Description:
   1. ICC/ES Evaluation Report No. ESR 1826
   2. IAPMO-ES Report No. 0165
   3. Effective “breathing,” (Vapor Permeable), air barrier material that can move with the building to maintain the air barrier characteristic for the life of the building.

2.6 SPRAY-FOAM INSULATION

A. Basis of Design Product: Polyurethane Spray Foam Insulation: ICYNENE MD-C-200™ by Icynene Inc. shall be used at all new and

existing floor, ceiling, and wall construction where studs are exposed. See drawings for locations.

1. All exposed foam shall receive a coating of Icynene DC-315 intumescent coating.

B. ICYNENE MD-C-200™ Spray Foam Insulation: Medium-density, conforming to the following:

1. Thermal Resistance (for 1 inch of material) (R-Value/inch @75 deg F): ASTM C 518; 6.5 hr/sq ft/degree F/BTU

2. Air Permeance (for 1 inch of material): ASTM E 283: <0.02 L/s.m^2 @75 Pa

3. Water Vapor Transmission (for 1.5 inches of material): ASTM E 96; 0.9 perms

4. Flame Spread and Smoke Developed Rating: ASTM E 84

   a. Flame Spread: Less than 25

   b. Smoke Development: Less than 450

5. Bacterial and Fungal Growth and Food Value: Not a source of food for mold (no growth).

2.7 ACCESSORIES

A. Insulation for Miscellaneous Voids:

1. Spray Polyurethane Foam Insulation: ASTM C 1029, Type II, closed cell, with maximum flame-spread and smoke-developed indexes of 75 and 450, respectively, per ASTM E 84.

B. Insulation Anchors, Spindles, and Standoffs: As recommended by manufacturer.

C. Adhesive for Bonding Insulation: Product compatible with insulation and air and water barrier materials, and with demonstrated capability to bond insulation securely to substrates without damaging insulation and substrates.

PART 3 - EXECUTION

3.1 INSTALLATION, GENERAL

A. Comply with insulation manufacturer's written instructions applicable to products and applications.

B. Install insulation that is undamaged, dry, and unsoiled and that has not been left exposed to ice, rain, or snow at any time.

C. Extend insulation to envelop entire area to be insulated. Fit tightly around obstructions and fill voids with insulation. Remove projections that interfere with placement.

D. Provide sizes to fit applications and selected from manufacturer's standard thicknesses, widths, and lengths. Apply single layer of insulation units unless multiple layers are otherwise shown or required to make up total thickness or to achieve R-value.

3.2 INSTALLATION OF SLAB INSULATION

A. On vertical slab edge and foundation surfaces, set insulation units using manufacturer's recommended adhesive according to manufacturer's written instructions.
   1. If not otherwise indicated, extend insulation a minimum of 24 inches below exterior grade line.

3.3 INSTALLATION OF INSULATION IN FRAMED CONSTRUCTION

A. Blanket Insulation: Install in cavities formed by framing members according to the following requirements:
   1. Use insulation widths and lengths that fill the cavities formed by framing members. If more than one length is required to fill the cavities, provide lengths that will produce a snug fit between ends.
   2. Place insulation in cavities formed by framing members to produce a friction fit between edges of insulation and adjoining framing members.
   3. Maintain 3-inch clearance of insulation around recessed lighting fixtures not rated for or protected from contact with insulation.
   4. For metal-framed wall cavities where cavity heights exceed 96 inches, support unfaced blankets mechanically and support faced blankets by taping flanges of insulation to flanges of metal studs.

B. Miscellaneous Voids: Install insulation in miscellaneous voids and cavity spaces where required to prevent gaps in insulation using the following materials:
   1. Spray Polyurethane Insulation: Apply according to manufacturer's written instructions.

3.4 INSTALLATION OF POURABLE OR SPRAY-FOAM INSULATION

A. EXAMINATION
   1. Examine substrates and conditions, under which work is to be performed. Do not proceed until unsatisfactory conditions have been corrected.
      a. Review placement area to determine final location will not be within 3 inches of any heat source where the temperature will exceed 180 deg F per ASTM C 411 or in accordance with authorities having jurisdiction.

B. PREPARATION
   1. Clean substrates and cavities of loose materials capable of interfering with insulation placement.

C. APPLICATION
   1. Site mix liquid components supplied by Manufacturer and installed by Manufacturer Licensed Dealer.
   2. Apply insulation to substrates in compliance with manufacturer's written instructions.
   3. Apply insulation to produce thickness required for indicated R Value.
   4. Extend insulation in thickness indicated to envelop entire area to be insulated.

5. Water-Piping Coordination: If water piping is located within insulated exterior walls, coordinate location of piping to ensure that it is placed on warm side of insulation and insulation encapsulates piping.

D. REPAIRS
1. Any repairs must be corrected by an authorized Manufacturer’s Licensed Dealer.

E. PROTECTION
1. Protect installed insulation from damage due to harmful weather exposures, physical abuse, and other causes. Provide temporary coverings where insulation is subject to abuse.

END OF SECTION 072100

SECTION 079200 - JOINT SEALANTS

PART 1 - GENERAL

1.1 SUMMARY

A. Section Includes:
1. Silicone joint sealants.
2. Nonstaining silicone joint sealants.
3. Urethane joint sealants.
4. Mildew-resistant joint sealants.
5. Latex joint sealants.

1.2 ACTION SUBMITTALS

A. Product Data: For each joint-sealant product.

B. Samples: For each kind and color of joint sealant required.

C. Joint-Sealant Schedule: Include the following information:
1. Joint-sealant application, joint location, and designation.
2. Joint-sealant manufacturer and product name.
3. Joint-sealant formulation.
4. Joint-sealant color.

1.3 INFORMATIONAL SUBMITTALS

A. Product test reports.

B. Sample warranties.

1.4 QUALITY ASSURANCE

A. Testing Agency Qualifications: Qualified according to ASTM C 1021 to conduct the testing indicated.

1.5 WARRANTY

A. Special Installer's Warranty: Installer agrees to repair or replace joint sealants that do not comply with performance and other requirements specified in this Section within specified warranty period.
1. Warranty Period: Two years from date of Substantial Completion.

B. Special Manufacturer's Warranty: Manufacturer agrees to furnish joint sealants to repair or replace those joint sealants that do not comply with performance and other requirements specified in this Section within specified warranty period.
1. Warranty Period: Five years from date of Substantial Completion.

PART 2 - PRODUCTS

2.1 JOINT SEALANTS, GENERAL

A. VOC Content of Interior Sealants: Sealants and sealant primers used inside the weatherproofing system shall comply with the following:
   1. Architectural sealants shall have a VOC content of 250 g/L or less.
   2. Sealants and sealant primers for nonporous substrates shall have a VOC content of 250 g/L or less.

B. Colors of Exposed Joint Sealants: As selected by Architect from manufacturer's full range.

2.2 SILICONE JOINT SEALANTS

A. Silicone, S, NS, 50, NT: Single-component, nonsag, plus 50 percent and minus 50 percent movement capability, nontraffic-use, neutral-curing silicone joint sealant; ASTM C 920, Type S, Grade NS, Class 50, Use NT.
   1. Dowing Corning Corporation.
   2. GE Construction Sealants; Momentive Performance Materials, Inc.
   3. May National Associates, Inc.; a subsidiary of Sika Corporations.
   4. Pecora Corporation.
   5. Sika Corporation.

2.3 NONSTAINING SILICONE JOINT SEALANTS

A. Nonstaining Joint Sealants: No staining of substrates when tested according to ASTM C 1248.

B. Silicone, Nonstaining, S, NS, 50, NT: Nonstaining, single-component, nonsag, plus 50 percent and minus 50 percent movement capability, nontraffic-use, neutral-curing silicone joint sealant; ASTM C 920, Type S, Grade NS, Class 50, Use NT.
   1. Dowing Corning Corporation.
   2. GE Construction Sealants; Momentive Performance Materials, Inc.
   3. May National Associates, Inc.; a subsidiary of Sika Corporations.
   4. Pecora Corporation.
   5. Tremco Incorporation.

2.4 URETHANE JOINT SEALANTS

A. Urethane, S, NS, 25, NT: Single-component, nonsag, nontraffic-use, plus 25 percent and minus 25 percent movement capability, urethane joint sealant; ASTM C 920, Type S, Grade NS, Class 25, Use NT.
   1. BASF Construction Chemicals – Construction Systems.
   2. Bostik, Inc.
   3. ER Systems; an ITW Company.
   4. Pecora Corporation.
   5. Polymeric Systems, Inc.
   6. Schnee-Morehead, Inc., an ITW Company.
   7. Sherwin-Williams Company (The).
   8. Sika Corporation.
   9. Tremco Incorporation.

B. Urethane, S, P, 25, T, NT: Single-component, pourable, plus 25 percent and minus 25 percent movement capability, traffic- and nontraffic-use, urethane joint sealant; ASTM C 920, Type S, Grade P, Class 25, Uses T and NT.
   1. BASF Construction Chemicals – Construction Systems.
   2. Pecora Corporation.
   3. Polymeric Systems, Inc.
   4. Schnee-Morehead, Inc., an ITW Company.
   5. Sherwin-Williams Company (The).

C. Urethane, M, P, 50, T, NT: Multicomponent, pourable, plus 50 percent and minus 50 percent movement capability, traffic- and nontraffic-use, urethane joint sealant; ASTM C 920, Type M, Grade P, Class 50, Uses T and NT.
   1. LymTal International Inc.

2.5 MILDEW-RESISTANT JOINT SEALANTS

A. Mildew-Resistant Joint Sealants: Formulated for prolonged exposure to humidity with fungicide to prevent mold and mildew growth.

B. Silicone, Mildew Resistant, Acid Curing, S, NS, 25, NT: Mildew-resistant, single-component, nonsag, plus 25 percent and minus 25 percent movement capability, nontraffic-use, acid-curing silicone joint sealant; ASTM C 920, Type S, Grade NS, Class 25, Use NT.
   1. Dow Corning Corporation.
   2. GE Construction Sealants; Momentive Performance Materials Inc.
   3. May National Associates, Inc.; a subsidiary of Sika Corporation.
   4. Soudal USA.
   5. Tremco Incorporated.

2.6 LATEX JOINT SEALANTS

A. Acrylic Latex: Acrylic latex or siliconized acrylic latex, ASTM C 834, Type OP, Grade NF.
   1. BASF Construction Chemicals – Construction Systems Bostik, Inc.
   2. May National Associates, Inc.; a subsidiary of Sika Corporation.
   3. Pecora Corporation.
   4. Sherwin-Williams Company (The).
   5. Tremco. Incorporation.

2.7 JOINT-SEALANT BACKING

A. Cylindrical Sealant Backings: ASTM C 1330, Type C (closed-cell material with a surface skin), Type O (open-cell material), Type B (bicellular material with a surface skin) or any of the preceding types, as approved in writing by joint-sealant manufacturer for joint application indicated, and of size and density to control sealant depth and otherwise contribute to producing optimum sealant performance.
   1. BASF Construction Chemicals – Construction Systems.
   2. Construction Foam Products; a division of Nomaco, Inc.

B. Bond-Breaker Tape: Polyethylene tape or other plastic tape recommended by sealant manufacturer.

2.8 MISCELLANEOUS MATERIALS

A. Primer: Material recommended by joint-sealant manufacturer where required for adhesion of sealant to joint substrates indicated, as determined from preconstruction joint-sealant-substrate tests and field tests.

B. Cleaners for Nonporous Surfaces: Chemical cleaners acceptable to manufacturers of sealants and sealant backing materials.

C. Masking Tape: Nonstaining, nonabsorbent material compatible with joint sealants and surfaces adjacent to joints.

PART 3 - EXECUTION

3.1 PREPARATION

A. Surface Cleaning of Joints: Clean out joints immediately before installing joint sealants to comply with joint-sealant manufacturer's written instructions and the following requirements:
   1. Remove laitance and form-release agents from concrete.
   2. Clean nonporous joint substrate surfaces with chemical cleaners or other means that do not stain, harm substrates, or leave residues capable of interfering with adhesion.

B. Joint Priming: Prime joint substrates where recommended by joint-sealant manufacturer or as indicated by preconstruction joint-sealant-substrate tests or prior experience.

C. Masking Tape: Use masking tape where required to prevent contact of sealant or primer with adjoining surfaces.

3.2 INSTALLATION OF JOINT SEALANTS

A. General: Comply with ASTM C 1193 and joint-sealant manufacturer's written installation instructions for products and applications indicated, unless more stringent requirements apply.

B. Install sealant backings of kind indicated to support sealants during application and at position required to produce cross-sectional shapes and depths of installed sealants relative to joint widths that allow optimum sealant movement capability.

C. Install bond-breaker tape behind sealants where sealant backings are not used between sealants and backs of joints.

D. Install sealants using proven techniques that comply with the following and at the same time backings are installed:
   1. Place sealants so they directly contact and fully wet joint substrates.
   2. Completely fill recesses in each joint configuration.
   3. Produce uniform, cross-sectional shapes and depths relative to joint widths that allow optimum sealant movement capability.

E. Tooling of Nonsag Sealants: Immediately after sealant application and before skinning or curing begins, tool sealants to form smooth,

uniform beads of configuration indicated. Use tooling agents that are approved in writing by sealant manufacturer and that do not discolor sealants or adjacent surfaces.
1. Provide concave joint profile per Figure 8A in ASTM C 1193 unless otherwise indicated.

3.3 JOINT-SEALANT SCHEDULE

A. Joint-Sealant Application: Exterior joints in horizontal traffic surfaces.
1. Joint Locations:
a. Isolation and contraction joints in cast-in-place concrete slabs.
b. Tile control and expansion joints.
c. Joints between different materials listed above.
d. Other joints as indicated on Drawings.
2. Joint Sealant: Urethane, M, P, 50, T, NT.
3. Joint-Sealant Color: As selected by Architect from manufacturer's full range of colors.

B. Joint-Sealant Application: Exterior joints in vertical surfaces and horizontal nontraffic surfaces.
1. Joint Locations:
a. Construction joints in cast-in-place concrete.
b. Control and expansion joints in unit masonry.
c. Joints in dimension stone cladding.
d. Other joints as indicated on Drawings.
2. Joint Sealant: Silicone, nonstaining, S, NS, 50, NT.
3. Joint-Sealant Color: As selected by Architect from manufacturer's full range of colors.

C. Joint-Sealant Application: Interior joints in horizontal traffic surfaces.
1. Joint Locations:
a. Isolation joints in cast-in-place concrete slabs.
b. Control and expansion joints in tile flooring.
c. Other joints as indicated on Drawings.
2. Joint Sealant: Urethane, S, P, 25, T, NT.
3. Joint-Sealant Color: As selected by Architect from manufacturer's full range of colors.

D. Joint-Sealant Application: Interior joints in vertical surfaces and horizontal nontraffic surfaces.
1. Joint Locations:
a. Control and expansion joints on exposed interior surfaces of exterior walls.
b. Tile control and expansion joints.
c. Vertical joints on exposed surfaces of unit masonry.
d. Other joints as indicated on Drawings.
2. Joint Sealant: Urethane, S, NS, 25, NT.
3. Joint-Sealant Color: As selected by Architect from manufacturer's full range of colors.

E. Joint-Sealant Application: Interior joints in vertical surfaces and horizontal nontraffic surfaces not subject to significant movement.

1. Joint Locations:

    a. Control joints on exposed interior surfaces of exterior walls.
    b. Perimeter joints between interior wall surfaces and frames of interior doors windows and elevator entrances.
    c. Other joints as indicated on Drawings.

2. Joint Sealant: Acrylic latex.
3. Joint-Sealant Color: As selected by Architect from manufacturer's full range of colors.

F. Joint-Sealant Application: Mildew-resistant interior joints in vertical surfaces and horizontal nontraffic surfaces.
    1. Joint Locations:
        a. Joints between plumbing fixtures and adjoining walls, floors, and counters.
        b. Tile control and expansion joints where indicated.
        c. Other joints as indicated on Drawings.
    2. Joint Sealant: Silicone, mildew resistant, acid curing, S, NS, 25, NT.
    3. Joint-Sealant Color: As selected by Architect from manufacturer's full range of colors.

G. Joint-Sealant Application: Concealed mastics.
    1. Joint Locations:
        a. Aluminum thresholds.
        b. Sill plates.
        c. Other joints as indicated on Drawings.
    2. Joint Sealant: Butyl-rubber based.
    3. Joint-Sealant Color: As selected by Architect from manufacturer's full range of colors.

END OF SECTION 079200

SECTION 081113 - HOLLOW METAL DOORS AND FRAMES

PART 1 - GENERAL

1.1 SUMMARY

A. Section includes hollow-metal work.

1.2 DEFINITIONS

A. Minimum Thickness: Minimum thickness of base metal without coatings according to NAAMM-HMMA 803 or SDI A250.8.

1.3 ACTION SUBMITTALS

A. Product Data: For each type of product.

B. Shop Drawings: Include elevations, door edge details, frame profiles, metal thicknesses, preparations for hardware, and other details.

C. Samples for Initial Selection: For units with factory-applied color finishes.

D. Samples for Verification: For each type of exposed finish required.

E. Schedule: Prepared by or under the supervision of supplier, using same reference numbers for details and openings as those on Drawings.

1.4 INFORMATIONAL SUBMITTALS

A. Product test reports.

PART 2 - PRODUCTS

2.1 MANUFACTURERS

A. Manufacturers: Subject to compliance with requirements, available manufacturers offering products that may be incorporated into the Work include, but are not limited to, the following:
1. Ceco Door Products; an Assa Abloy Group company.
2. Commercial Door & Hardware Inc.
3. Curries Company; an Assa Abloy Group company.
4. Republic Doors and Frames.
5. Security Metal Products Corp.
6. Steelcraft; an Ingersoll-Rand company.

2.2 REGULATORY REQUIREMENTS

A. Fire-Rated Assemblies: Complying with NFPA 80 and listed and labeled by a qualified testing agency acceptable to authorities having jurisdiction for fire-protection ratings and temperature-rise limits indicated, based on testing at positive pressure according to NFPA 252 or UL 10C.
1. Smoke- and Draft-Control Assemblies: Provide an assembly with gaskets listed and labeled for smoke and draft control by a

qualified testing agency acceptable to authorities having jurisdiction, based on testing according to UL 1784 and installed in compliance with NFPA 105.

B. Fire-Rated, Borrowed-Lite Assemblies: Complying with NFPA 80 and listed and labeled by a testing and inspecting agency acceptable to authorities having jurisdiction for fire-protection ratings indicated, based on testing according to NFPA 257 or UL 9.

2.3 INTERIOR DOORS AND FRAMES

A. Heavy-Duty Doors and Frames: SDI A250.8, Level 2.
   1. Physical Performance: Level B according to SDI A250.4.
   2. Doors:
      a. Type: As indicated in the Door and Frame Schedule.
      b. Thickness: 1-3/4 inches.
      c. Face: Uncoated, cold-rolled steel sheet, minimum thickness of 0.042 inch.
      d. Edge Construction: Model 2, Seamless.
      e. Core: Vertical steel stiffener.
   3. Frames:
      a. Materials: Uncoated, steel sheet, minimum thickness of 0.053 inch.
      b. Sidelite and Transom Frames: Fabricated from same thickness material as adjacent door frame.
      c. Construction: Full profile welded.
   4. Exposed Finish: Prime.

2.4 EXTERIOR HOLLOW-METAL DOORS AND FRAMES

A. Heavy-Duty Doors and Frames: SDI A250.8, Level 2. [At locations indicated in the Door and Frame Schedule] <Insert locations>.
   1. Physical Performance: Level B according to SDI A250.4.
   2. Doors:
      a. Type: As indicated in the Door and Frame Schedule.
      b. Thickness: 1-3/4 inches.
      c. Face: Metallic-coated steel sheet, minimum thickness of 0.042 inch, with minimum A40 coating.
      d. Edge Construction: Model 2, Seamless.
      e. Core: Polyurethane.
   3. Thermal-Rated Doors: Provide doors fabricated with thermal-resistance value (R-value) of not less than 2.1 deg F x h x sq. ft./Btu when tested according to ASTM C 1363.
   4. Frames:
      a. Materials: Metallic-coated steel sheet, minimum thickness of 0.053 inch, with minimum A40 coating.
      b. Construction: Full profile welded.
   5. Exposed Finish: Prime.

B. Extra-Heavy-Duty Doors and Frames: SDI A250.8, Level 3. Located at amain entrance Doors No. 100 and 101.
   1. Physical Performance: Level A according to SDI A250.4.
   2. Doors:
      a. Type: As indicated in the Door and Frame Schedule.
      b. Thickness: 1-3/4 inches.

c. Face: Metallic-coated steel sheet, minimum thickness of 0.053 inch, with minimum A40 coating.
d. Edge Construction: Model 2, Seamless.
e. Core: Polyurethane.

3. Thermal-Rated Doors: Provide doors fabricated with thermal-resistance value (R-value) of not less than 2.1 deg F x h x sq. ft./Btu when tested according to ASTM C 1363.
4. Frames:
   a. Materials: Metallic-coated steel sheet, minimum thickness of 0.053 inch, with minimum A40 coating.
   b. Construction: Full profile welded.
5. Exposed Finish: Prime.

2.5 BORROWED LITES

A. Hollow-metal frames of metallic-coated steel sheet, minimum thickness of 0.053 inch.

B. Construction: Full profile welded.

2.6 FRAME ANCHORS

A. Jamb Anchors:
   1. Masonry Type: Adjustable strap-and-stirrup or T-shaped anchors to suit frame size, not less than 0.042 inch thick, with corrugated or perforated straps not less than 2 inches wide by 10 inches long; or wire anchors not less than 0.177 inch thick.
   2. Stud-Wall Type: Designed to engage stud, welded to back of frames; not less than 0.042 inch thick.
   3. Compression Type for Drywall Slip-on Frames: Adjustable compression anchors.
   4. Postinstalled Expansion Type for In-Place Concrete or Masonry: Minimum 3/8-inch- diameter bolts with expansion shields or inserts. Provide pipe spacer from frame to wall, with throat reinforcement plate, welded to frame at each anchor location.

B. Floor Anchors: Formed from same material as frames, minimum thickness of 0.042 inch, and as follows:
   1. Monolithic Concrete Slabs: Clip-type anchors, with two holes to receive fasteners.
   2. Separate Topping Concrete Slabs: Adjustable-type anchors with extension clips, allowing not less than 2-inch height adjustment. Terminate bottom of frames at finish floor surface.

2.7 MATERIALS

A. Cold-Rolled Steel Sheet: ASTM A 1008/A 1008M, Commercial Steel (CS), Type B; suitable for exposed applications.

B. Hot-Rolled Steel Sheet: ASTM A 1011/A 1011M, Commercial Steel (CS), Type B; free of scale, pitting, or surface defects; pickled and oiled.

C. Metallic-Coated Steel Sheet: ASTM A 653/A 653M, Commercial Steel (CS), Type B.

D. Frame Anchors: ASTM A 879/A 879M, Commercial Steel (CS), 04Z coating designation; mill phosphatized.
   1. For anchors built into exterior walls, steel sheet complying with ASTM A 1008/A 1008M or ASTM A 1011/A 1011M, hot-dip galvanized according to ASTM A 153/A 153M, Class B.

E. Inserts, Bolts, and Fasteners: Hot-dip galvanized according to ASTM A 153/A 153M.

F. Power-Actuated Fasteners in Concrete: From corrosion-resistant materials.

G. Grout: ASTM C 476, except with a maximum slump of 4 inches, as measured according to ASTM C 143/C 143M.

H. Mineral-Fiber Insulation: ASTM C 665, Type I (blankets without membrane facing).

I. Glazing: Section 088000 "Glazing."

J. Bituminous Coating: Cold-applied asphalt mastic, compounded for 15-mil dry film thickness per coat.

2.8 FABRICATION

A. Fabricate hollow-metal work to be rigid and free of defects, warp, or buckle. Accurately form metal to required sizes and profiles, with minimum radius for metal thickness. Where practical, fit and assemble units in manufacturer's plant. To ensure proper assembly at Project site, clearly identify work that cannot be permanently factory assembled before shipment.

B. Hollow-Metal Doors:
   1. Exterior Doors: Provide weep-hole openings in bottoms of exterior doors to permit moisture to escape. Seal joints in top edges of doors against water penetration.
   2. Astragals: Provide overlapping astragal on one leaf of pairs of doors where required by NFPA 80 for fire-performance rating or where indicated.

C. Hollow-Metal Frames: Where frames are fabricated in sections due to shipping or handling limitations, provide alignment plates or angles at each joint, fabricated of same thickness metal as frames.
   1. Sidelite and Transom Bar Frames: Provide closed tubular members with no visible face seams or joints, fabricated from same material as door frame. Fasten members at crossings and to jambs by butt welding.
   2. Provide countersunk, flat- or oval-head exposed screws and bolts for exposed fasteners unless otherwise indicated.
   3. Grout Guards: Weld guards to frame at back of hardware mortises in frames to be grouted.
   4. Floor Anchors: Weld anchors to bottoms of jambs with at least four spot welds per anchor; however, for slip-on drywall frames, provide anchor clips or countersunk holes at bottoms of jambs.
   5. Jamb Anchors: Provide number and spacing of anchors as follows:

a. Masonry Type: Locate anchors not more than 16 inches from top and bottom of frame. Space anchors not more than 32 inches o.c., to match coursing, and as follows:
   1) Two anchors per jamb up to 60 inches high.
   2) Three anchors per jamb from 60 to 90 inches high.
   3) Four anchors per jamb from 90 to 120 inches high.
   4) Four anchors per jamb plus one additional anchor per jamb for each 24 inches or fraction thereof above 120 inches high.
b. Stud-Wall Type: Locate anchors not more than 18 inches from top and bottom of frame. Space anchors not more than 32 inches o.c. and as follows:
   1) Three anchors per jamb up to 60 inches high.
   2) Four anchors per jamb from 60 to 90 inches high.
   3) Five anchors per jamb from 90 to 96 inches high.
   4) Five anchors per jamb plus one additional anchor per jamb for each 24 inches or fraction thereof above 96 inches high.
c. Compression Type: Not less than two anchors in each frame.
d. Postinstalled Expansion Type: Locate anchors not more than 6 inches from top and bottom of frame. Space anchors not more than 26 inches o.c.

6. Door Silencers: Except on weather-stripped frames, drill stops to receive door silencers.
   a. Single-Door Frames: Drill stop in strike jamb to receive three door silencers.
   b. Double-Door Frames: Drill stop in head jamb to receive two door silencers.

D. Hardware Preparation: Factory prepare hollow-metal work to receive templated mortised hardware; include cutouts, reinforcement, mortising, drilling, and tapping according to SDI A250.6, the Door Hardware Schedule, and templates.
   1. Reinforce doors and frames to receive nontemplated, mortised, and surface-mounted door hardware.
   2. Comply with applicable requirements in SDI A250.6 and BHMA A156.115 for preparation of hollow-metal work for hardware.

E. Stops and Moldings: Provide stops and moldings around glazed lites and louvers where indicated. Form corners of stops and moldings with mitered hairline joints.
   1. Single Glazed Lites: Provide fixed stops and moldings welded on secure side of hollow-metal work.
   2. Multiple Glazed Lites: Provide fixed and removable stops and moldings so that each glazed lite is capable of being removed independently.
   3. Provide fixed frame moldings on outside of exterior and on secure side of interior doors and frames.
   4. Provide loose stops and moldings on inside of hollow-metal work.
   5. Coordinate rabbet width between fixed and removable stops with glazing and installation types indicated.

2.9 STEEL FINISHES

A. Prime Finish: Clean, pretreat, and apply manufacturer's standard primer.

1. Shop Primer: SDI A250.10.

2.10 ACCESSORIES

A. Louvers: Provide sightproof louvers for interior doors, where indicated, which comply with SDI 111C, with blades or baffles formed of 0.020-inch- thick, cold-rolled steel sheet set into 0.032-inch-thick steel frame.
   1. Fire-Rated Automatic Louvers: Movable blades closed by actuating fusible link, and listed and labeled for use in fire-rated door assemblies of type and fire-resistance rating indicated.

B. Mullions and Transom Bars: Join to adjacent members by welding or rigid mechanical anchors.

C. Grout Guards: Formed from same material as frames, not less than 0.016 inch thick.

PART 3 - EXECUTION

3.1 INSTALLATION

A. Hollow-Metal Frames: Install hollow-metal frames for doors, transoms, sidelites, borrowed lites, and other openings, of size and profile indicated. Comply with SDI A250.11 or NAAMM-HMMA 840 as required by standards specified.
   1. Set frames accurately in position; plumbed, aligned, and braced securely until permanent anchors are set. After wall construction is complete, remove temporary braces, leaving surfaces smooth and undamaged.
      a. At fire-rated openings, install frames according to NFPA 80.
      b. Where frames are fabricated in sections because of shipping or handling limitations, field splice at approved locations by welding face joint continuously; grind, fill, dress, and make splice smooth, flush, and invisible on exposed faces.
      c. Install frames with removable stops located on secure side of opening.
      d. Install door silencers in frames before grouting.
      e. Remove temporary braces necessary for installation only after frames have been properly set and secured.
      f. Check plumb, square, and twist of frames as walls are constructed. Shim as necessary to comply with installation tolerances.
      g. Field apply bituminous coating to backs of frames that will be filled with grout containing antifreezing agents.
   2. Floor Anchors: Provide floor anchors for each jamb and mullion that extends to floor, and secure with postinstalled expansion anchors.
      a. Floor anchors may be set with power-actuated fasteners instead of postinstalled expansion anchors if so indicated and approved on Shop Drawings.
   3. Metal-Stud Partitions: Solidly pack mineral-fiber insulation inside frames.
   4. Masonry Walls: Coordinate installation of frames to allow for solidly filling space between frames and masonry with grout.

5. Concrete Walls: Solidly fill space between frames and concrete with mineral-fiber insulation.
6. In-Place Concrete or Masonry Construction: Secure frames in place with postinstalled expansion anchors. Countersink anchors, and fill and make smooth, flush, and invisible on exposed faces.
7. In-Place Metal or Wood-Stud Partitions: Secure slip-on drywall frames in place according to manufacturer's written instructions.
8. Installation Tolerances: Adjust hollow-metal door frames for squareness, alignment, twist, and plumb to the following tolerances:
   a. Squareness: Plus or minus 1/16 inch, measured at door rabbet on a line 90 degrees from jamb perpendicular to frame head.
   b. Alignment: Plus or minus 1/16 inch, measured at jambs on a horizontal line parallel to plane of wall.
   c. Twist: Plus or minus 1/16 inch, measured at opposite face corners of jambs on parallel lines, and perpendicular to plane of wall.
   d. Plumbness: Plus or minus 1/16 inch, measured at jambs at floor.

B. Hollow-Metal Doors: Fit hollow-metal doors accurately in frames, within clearances specified below. Shim as necessary.
1. Non-Fire-Rated Steel Doors:
   a. Between Door and Frame Jambs and Head: 1/8 inch plus or minus 1/32 inch.
   b. Between Edges of Pairs of Doors: 1/8 inch to 1/4 inch plus or minus 1/32 inch.
   c. At Bottom of Door: 3/4 inch plus or minus 1/32 inch.
   d. Between Door Face and Stop: 1/16 inch to 1/8 inch plus or minus 1/32 inch.
2. Fire-Rated Doors: Install doors with clearances according to NFPA 80.
3. Smoke-Control Doors: Install doors and gaskets according to NFPA 105.

C. Glazing: Comply with installation requirements in Section 088000 "Glazing" and with hollow-metal manufacturer's written instructions.
1. Secure stops with countersunk flat- or oval-head machine screws spaced uniformly not more than 9 inches o.c. and not more than 2 inches o.c. from each corner.

3.2 ADJUSTING AND CLEANING

A. Final Adjustments: Check and readjust operating hardware items immediately before final inspection. Leave work in complete and proper operating condition. Remove and replace defective work, including hollow-metal work that is warped, bowed, or otherwise unacceptable.

B. Remove grout and other bonding material from hollow-metal work immediately after installation.

C. Prime-Coat Touchup: Immediately after erection, sand smooth rusted or damaged areas of prime coat and apply touchup of compatible air-drying, rust-inhibitive primer.

D. Metallic-Coated Surface Touchup: Clean abraded areas and repair with galvanizing repair paint according to manufacturer's written instructions.

END OF SECTION 081113

SECTION 083113 - ACCESS DOORS AND FRAMES

PART 1 - GENERAL

1.1 SUMMARY

A. Section Includes:
   1. Access doors and frames for walls and ceilings.

1.2 ACTION SUBMITTALS

A. Product Data: For each type of product.

B. Shop Drawings: Include plans, elevations, sections, details, and attachments to other work.

C. Samples: For each door face material.

D. Schedule: Types, locations, sizes, latching or locking provisions, and other data pertinent to installation.

PART 2 - PRODUCTS

2.1 PERFORMANCE REQUIREMENTS

A. Fire-Rated Access Doors and Frames: Units complying with NFPA 80 tested according to the following test method:
   1. NFPA 252 or UL 10B for fire-rated access door assemblies installed vertically.
   2. NFPA 288 for fire-rated access door assemblies installed horizontally.

2.2 ACCESS DOORS AND FRAMES FOR WALLS AND CEILINGS

A. Manufacturers: Subject to compliance with requirements, available manufacturers offering products that may be incorporated into the Work include, but are not limited to, the following:
   1. Access Panel Solutions.
   2. Acudor Products, Inc.
   3. Alfab, Inc.
   4. Babcock-Davis.
   5. Cendrex Inc.
   6. Elmdor/Stoneman Manufacturing Co.; Div. of Acorn Engineering Co.
   7. Jensen Industries; Div. of Broan-Nutone, LLC.
   8. J. L. Industries, Inc.; Div. of Activar Construction Products Group.
   9. Karp Associates, Inc.
   10. Larsen's Manufacturing Company.
   11. Maxam Metal Products Limited.
   12. Metropolitan Door Industries Corp.
   13. MIFAB, Inc.
   14. Milcor Inc.
   15. Nystrom, In.
   16. Williams Bros. Corporation of America (The).

B. Source Limitations: Obtain each type of access door and frame from single source from single manufacturer.

C. Flush Access Doors with Exposed Flanges:
1. Assembly Description: Fabricate door to fit flush to frame. Provide manufacturer's standard-width exposed flange, proportional to door size.
2. Locations: Wall and ceiling.
3. Door Size: See Drawings.
4. Uncoated Steel Sheet for Door: Nominal 0.060 inch, 16 gage.
   a. Finish: Factory prime.
5. Metallic-Coated Steel Sheet for Door: Nominal 0.064 inch, 16 gage.
   a. Finish: Factory prime.
6. Frame Material: Same material, thickness, and finish as door.
7. Hinges: Manufacturer's standard.
8. Hardware: Lock.

D. Hardware:
1. Lock: Cylinder.

2.3 MATERIALS

A. Steel Plates, Shapes, and Bars: ASTM A 36/A 36M.

B. Rolled-Steel Floor Plate: ASTM A 786/A 786M, rolled from plate complying with ASTM A 36/A 36M or ASTM A 283/A 283M, Grade C or D.

C. Steel Sheet: Uncoated or electrolytic zinc coated, ASTM A 879/A 879M, with cold-rolled steel sheet substrate complying with ASTM A 1008/A 1008M, Commercial Steel (CS), exposed.

D. Metallic-Coated Steel Sheet: ASTM A 653/A 653M, Commercial Steel (CS), Type B; with minimum G60 or A60 metallic coating.

E. Frame Anchors: Same type as door face.

F. Inserts, Bolts, and Anchor Fasteners: Hot-dip galvanized steel according to ASTM A 153/A 153M or ASTM F 2329.

2.4 FABRICATION

A. General: Provide access door and frame assemblies manufactured as integral units ready for installation.

B. Metal Surfaces: For metal surfaces exposed to view in the completed Work, provide materials with smooth, flat surfaces without blemishes. Do not use materials with exposed pitting, seam marks, roller marks, rolled trade names, or roughness.

C. Doors and Frames: Grind exposed welds smooth and flush with adjacent surfaces. Furnish attachment devices and fasteners of type required to secure access doors to types of supports indicated.

D. Recessed Access Doors: Form face of panel to provide recess for application of applied finish. Reinforce panel as required to prevent buckling.
   1. For recessed doors with plaster infill, provide self-furring expanded metal lath attached to door panel.

E. Latching Mechanisms: Furnish number required to hold doors in flush, smooth plane when closed.
   1. For cylinder locks, furnish two keys per lock and key all locks alike.
   2. For recessed panel doors, provide access sleeves for each locking device. Furnish plastic grommets and install in holes cut through finish.

2.5 FINISHES

A. Comply with NAAMM's "Metal Finishes Manual for Architectural and Metal Products" for recommendations for applying and designating finishes.

B. Protect mechanical finishes on exposed surfaces from damage by applying a strippable, temporary protective covering before shipping.

C. Appearance of Finished Work: Noticeable variations in same piece are not acceptable. Variations in appearance of adjoining components are acceptable if they are within the range of approved Samples and are assembled or installed to minimize contrast.

D. Steel and Metallic-Coated-Steel Finishes:
   1. Factory Prime: Apply manufacturer's standard, fast-curing, lead- and chromate-free, universal primer immediately after surface preparation and pretreatment.

PART 3 - EXECUTION

3.1 INSTALLATION

A. Comply with manufacturer's written instructions for installing access doors and frames.

B. Install doors flush with adjacent finish surfaces or recessed to receive finish material.

3.2 ADJUSTING

A. Adjust doors and hardware, after installation, for proper operation.

B. Remove and replace doors and frames that are warped, bowed, or otherwise damaged.

END OF SECTION 083113

SECTION 083513 - FOLDING DOORS

PART 1 - GENERAL

1.1 SUMMARY

A. Section Includes:
   1. Panel folding doors.

1.2 ACTION SUBMITTALS

A. Product Data: For each type of product.

B. Samples: For each exposed product and for each color and texture specified.

1.3 CLOSEOUT SUBMITTALS

A. Maintenance data.

PART 2 - PRODUCTS

2.1 PANEL FOLDING DOORS

A. Description: Top-supported, horizontal-sliding, manually operated panel folding doors, with panels joined by continuous hinge connectors for the full height of panels.
   1. American Folding Door Company, Inc.
   2. Foldoor.
   3. Panelfold Inc.
   4. Won-Door Corporation.
   5. Woodfold Mfg., Inc.

B. Basis-of-Design Product: Woodfold 2100 Series.

C. Nominal Panel Width: 4 inches.

D. Panel Facing:
   1. Surface-Burning Characteristics: Comply with ASTM E 84; testing by a qualified testing agency. Identify products with appropriate markings of applicable testing agency.
      a. Flame-Spread Index: 25 or less.
      b. Smoke-Developed Index: 50 or less.
   2. Plastic-Laminate Facing: Grade VGS, high-pressure plastic laminate complying with NEMA LD 3.
      a. Color, Texture, and Pattern: As selected by Architect from manufacturer's full range of wood grain, solid colors, and textures.

E. Carriers: Four-wheel carriers at lead post and two-wheel carriers at intermediate spacing.

F. Tracks: Limit track deflection, independent of structural supporting system, to no more than 80 percent of bottom clearance. Provide the following features:

1. Recessed mounting.
2. Ceiling guard.

G. Hinge Connector: In color selected by Architect from manufacturer's full range.

H. Hardware:
1. Finish: Manufacturer's standard.
2. Latch: Operable from both sides of closed door.
3. Foot Bolts: On lead post where indicated. Secure to post to avoid interference with seals.

I. Jamb Molding: At closing jamb for light-tight jamb closure.
1. Material: Metal, in manufacturer's standard finish.
2. Jamb Strip: Nonferrous for end-opening doors.

J. Wood Track Molding: To match species and finish of panel facings.

K. Jambs and Posts:
1. Fixed Jambs: For doors anchors anchored to stack jamb.
2. Lead Post: At closing edge of door.

L. Tiebacks: To maintain door in stacked position.

PART 3 - EXECUTION

3.1 INSTALLATION

A. General: Install folding doors complying with manufacturer's written installation instructions. Install track in one piece.

B. Standard Floor Clearances: 1/4 to 3/4 inch maximum (above floor finish).

END OF SECTION 083513

SECTION 084113 - ALUMINUM-FRAMED ENTRANCES AND STOREFRONTS

PART 1 - GENERAL

1.1 SUMMARY

A. Section Includes:
   1. Exterior and interior storefront framing.
   2. Exterior manual-swing entrance doors and door-frame units.

1.2 ACTION SUBMITTALS

A. Product Data: For each type of product.

B. Shop Drawings: Include plans, elevations, sections, full-size details, and attachments to other work.
   1. Show connection to and continuity with adjacent thermal, weather, air, and vapor barriers.

C. Samples: For each exposed finish required.

D. Entrance Door Hardware Schedule: Prepared by or under supervision of supplier, detailing fabrication and assembly of entrance door hardware, as well as procedures and diagrams.

E. Delegated-Design Submittal: For aluminum-framed entrances and storefronts indicated to comply with performance requirements and design criteria, including analysis data signed and sealed by the qualified professional engineer responsible for their preparation.

1.3 INFORMATIONAL SUBMITTALS

A. Energy Performance Certificates: NFRC-certified energy performance values from manufacturer.

B. Product test reports.

C. Field quality-control reports.

D. Sample warranties.

1.4 CLOSEOUT SUBMITTALS

A. Maintenance data.

1.5 QUALITY ASSURANCE

A. Installer Qualifications: An entity that employs installers and supervisors who are trained and approved by manufacturer.

B. Testing Agency Qualifications: Qualified according to ASTM E 699 for testing indicated and accredited by IAS or ILAC Mutual Recognition Arrangement as complying with ISO/IEC 17025.

C. Product Options: Information on Drawings and in Specifications establishes requirements for aesthetic effects and performance characteristics of assemblies. Aesthetic effects are indicated by dimensions, arrangements, alignment, and profiles of components and assemblies as they relate to sightlines, to one another, and to adjoining construction.
   1. Do not change intended aesthetic effects, as judged solely by Architect, except with Architect's approval. If changes are proposed, submit comprehensive explanatory data to Architect for review.

1.6 WARRANTY

A. Special Warranty: Installer agrees to repair or replace components of aluminum-framed entrances and storefronts that do not comply with requirements or that fail in materials or workmanship within specified warranty period.
   1. Warranty Period: Five years from date of Substantial Completion.

B. Special Finish Warranty: Standard form in which manufacturer agrees to repair finishes or replace aluminum that shows evidence of deterioration of factory-applied finishes within specified warranty period.
   1. Warranty Period: Twenty years from date of Substantial Completion.

PART 2 - PRODUCTS

2.1 PERFORMANCE REQUIREMENTS

A. Delegated Design: Engage a qualified professional engineer, as defined in Section 014000 "Quality Requirements," to design aluminum-framed entrances and storefronts.

B. General Performance: Comply with performance requirements specified, as determined by testing of aluminum-framed entrances and storefronts representing those indicated for this Project without failure due to defective manufacture, fabrication, installation, or other defects in construction.
   1. Aluminum-framed entrances and storefronts shall withstand movements of supporting structure including, but not limited to, story drift, twist, column shortening, long-term creep, and deflection from uniformly distributed and concentrated live loads.
   2. Failure also includes the following:
      a. Thermal stresses transferring to building structure.
      b. Glass breakage.
      c. Noise or vibration created by wind and thermal and structural movements.
      d. Loosening or weakening of fasteners, attachments, and other components.
      e. Failure of operating units.

C. Structural Loads:
   1. Wind Loads: As indicated on Drawings and per IBC 2006.
   2. Other Design Loads: As indicated on Drawings and per IBC 2006.

D. Deflection of Framing Members: At design wind pressure, as follows:
   1. Deflection Normal to Wall Plane: Limited to edge of glass in a direction perpendicular to glass plane not exceeding 1/175 of the glass edge length for each individual glazing lite or an amount that restricts edge deflection of individual glazing lites to 3/4 inch, whichever is less.
   2. Deflection Parallel to Glazing Plane: Limited to 1/360 of clear span or 1/8 inch, whichever is smaller.
   3. Cantilever Deflection: Where framing members overhang an anchor point, as follows:
      a. Perpendicular to Plane of Wall: No greater than 1/240 of clear span plus 1/4 inch for spans greater than 11 feet 8-1/4 inches or 1/175 times span, for spans less than 11 feet 8-1/4 inches.

E. Structural: Test according to ASTM E 330 as follows:
   1. When tested at positive and negative wind-load design pressures, assemblies do not evidence deflection exceeding specified limits.
   2. When tested at 150 percent of positive and negative wind-load design pressures, assemblies, including anchorage, do not evidence material failures, structural distress, or permanent deformation of main framing members exceeding 0.2 percent of span.
   3. Test Durations: As required by design wind velocity, but not less than 10 seconds.

F. Air Infiltration: Test according to ASTM E 283 for infiltration as follows:
   1. Fixed Framing and Glass Area:
      a. Maximum air leakage of 0.06 cfm/sq. ft. at a static-air-pressure differential of 6.24 lbf/sq. ft.
   2. Entrance Doors:
      a. Pair of Doors: Maximum air leakage of 1.0 cfm/sq. ft. at a static-air-pressure differential of 1.57 lbf/sq. ft.
      b. Single Doors: Maximum air leakage of 0.5 cfm/sq. ft. at a static-air-pressure differential of 1.57 lbf/sq. ft.

G. Water Penetration under Static Pressure: Test according to ASTM E 331 as follows:
   1. No evidence of water penetration through fixed glazing and framing areas when tested according to a minimum static-air-pressure differential of 20 percent of positive wind-load design pressure, but not less than 6.24 lbf/sq. ft.

H. Energy Performance: Certify and label energy performance according to NFRC as follows:
   1. Thermal Transmittance (U-factor): Fixed glazing and framing areas shall have U-factor of not more than 0.38 Btu/sq. ft. x h x deg F as determined according to NFRC 100.
   2. Solar Heat Gain Coefficient: Fixed glazing and framing areas shall have a solar heat gain coefficient of no greater than 0.40 as determined according to NFRC 200.
   3. Condensation Resistance: Fixed glazing and framing areas shall have an NFRC-certified condensation resistance rating of no less than 62 frame and 68 galss as determined according to NFRC 500.

2.2 MANUFACTURERS

A. EFCO Corporation.

B. Kawneer North America.

C. Oldcastle BuildingEnvelope.

D. Pittco Architectural Metals, Inc.

E. YKK AP America Inc.

2.3 FRAMING

A. Framing Members: Manufacturer's extruded- or formed-aluminum framing members of thickness required and reinforced as required to support imposed loads.
   1. Construction: Thermally broken.
   2. Glazing System: Retained mechanically with gaskets on four sides.
   3. Glazing Plane: Center.
   4. Finish: High-performance organic finish.
   5. Fabrication Method: Field-fabricated stick system.

B. Backer Plates: Manufacturer's standard, continuous backer plates for framing members, if not integral, where framing abuts adjacent construction.

C. Brackets and Reinforcements: Manufacturer's standard high-strength aluminum with nonstaining, nonferrous shims for aligning system components.

D. Materials:
   1. Aluminum: Alloy and temper recommended by manufacturer for type of use and finish indicated.
      a. Sheet and Plate: ASTM B 209.
      b. Extruded Bars, Rods, Profiles, and Tubes: ASTM B 221.
      c. Extruded Structural Pipe and Tubes: ASTM B 429/B 429M.
      d. Structural Profiles: ASTM B 308/B 308M.
   2. Steel Reinforcement: Manufacturer's standard zinc-rich, corrosion-resistant primer complying with SSPC-PS Guide No. 12.00; applied immediately after surface preparation and pretreatment. Select surface preparation methods according to recommendations in SSPC-SP COM, and prepare surfaces according to applicable SSPC standard.
      a. Structural Shapes, Plates, and Bars: ASTM A 36/A 36M.
      b. Cold-Rolled Sheet and Strip: ASTM A 1008/A 1008M.
      c. Hot-Rolled Sheet and Strip: ASTM A 1011/A 1011M.

2.4 ENTRANCE DOOR SYSTEMS

A. Entrance Doors: Manufacturer's standard glazed entrance doors for manual-swing operation.
   1. Door Construction: 2- to 2-1/4-inch overall thickness, with minimum 0.125-inch- thick, extruded-aluminum tubular rail and stile members. Mechanically fasten corners with reinforcing

brackets that are deeply penetrated and fillet welded or that incorporate concealed tie rods.
a. Thermal Construction: High-performance plastic connectors separate aluminum members exposed to the exterior from members exposed to the interior.
2. Door Design: Wide stile; 5-inch nominal width.
3. Glazing Stops and Gaskets: Beveled, snap-on, extruded-aluminum stops and preformed gaskets.
a. Provide nonremovable glazing stops on outside of door.

2.5 GLAZING

A. Glazing: Comply with Section 088000 "Glazing."

B. Glazing Gaskets: Manufacturer's standard sealed-corner pressure-glazing system of black, resilient elastomeric glazing gaskets, setting blocks, and shims or spacers.

C. Glazing Sealants: As recommended by manufacturer.

D. Sealants used inside the weatherproofing system shall have a VOC content of 250 g/L.

E. Sealants used inside the weatherproofing system shall comply with the testing and product requirements of the California Department of Public Health's "Standard Method for the Testing and Evaluation of Volatile Organic Chemical Emissions from Indoor Sources Using Environmental Chambers."

2.6 FABRICATION

A. Form or extrude aluminum shapes before finishing.

B. Weld in concealed locations to greatest extent possible to minimize distortion or discoloration of finish. Remove weld spatter and welding oxides from exposed surfaces by descaling or grinding.

C. Fabricate components that, when assembled, have the following characteristics:
1. Profiles that are sharp, straight, and free of defects or deformations.
2. Accurately fitted joints with ends coped or mitered.
3. Physical and thermal isolation of glazing from framing members.
4. Accommodations for thermal and mechanical movements of glazing and framing to maintain required glazing edge clearances.
5. Provisions for field replacement of glazing from interior.
6. Fasteners, anchors, and connection devices that are concealed from view to greatest extent possible.

D. Mechanically Glazed Framing Members: Fabricate for flush glazing without projecting stops.

E. Entrance Door Frames: Reinforce as required to support loads imposed by door operation and for installing entrance door hardware.

F. Entrance Doors: Reinforce doors as required for installing entrance door hardware.

G. Entrance Door Hardware Installation: Factory install entrance door hardware to the greatest extent possible. Cut, drill, and tap for factory-installed entrance door hardware before applying finishes.

H. After fabrication, clearly mark components to identify their locations in Project according to Shop Drawings.

2.7 ALUMINUM FINISHES

A. High-Performance Organic Finish: Two-coat fluoropolymer finish complying with AAMA 2605 and containing not less than 70 percent PVDF resin by weight in color coat.
   1. Color and Gloss: As selected by Architect from manufacturer's full range.

PART 3 - EXECUTION

3.1 INSTALLATION

A. General:
   1. Comply with manufacturer's written instructions.
   2. Do not install damaged components.
   3. Fit joints to produce hairline joints free of burrs and distortion.
   4. Rigidly secure nonmovement joints.
   5. Install anchors with separators and isolators to prevent metal corrosion and electrolytic deterioration and to prevent impeding movement of moving joints.
   6. Seal perimeter and other joints watertight unless otherwise indicated.

B. Metal Protection:
   1. Where aluminum is in contact with dissimilar metals, protect against galvanic action by painting contact surfaces with materials recommended by manufacturer for this purpose or by installing nonconductive spacers.
   2. Where aluminum is in contact with concrete or masonry, protect against corrosion by painting contact surfaces with bituminous paint.

C. Set continuous sill members and flashing in full sealant bed as specified in Section 079200 "Joint Sealants" to produce weathertight installation.

D. Install components plumb and true in alignment with established lines and grades.

E. Install operable units level and plumb, securely anchored, and without distortion. Adjust weather-stripping contact and hardware movement to produce proper operation.

F. Install glazing as specified in Section 088000 "Glazing."

G. Entrance Doors: Install doors to produce smooth operation and tight fit at contact points.
   1. Exterior Doors: Install to produce weathertight enclosure and tight fit at weather stripping.
   2. Field-Installed Entrance Door Hardware: Install surface-mounted entrance door hardware according to entrance door hardware manufacturers' written instructions using concealed fasteners to greatest extent possible.

3.2 FIELD QUALITY CONTROL

A. Testing Agency: Engage a qualified testing agency to perform tests and inspections.

B. Field Quality-Control Testing: Perform the following test on representative areas of aluminum-framed entrances and storefronts.
   1. Water-Spray Test: Before installation of interior finishes has begun, areas designated by Architect shall be tested according to AAMA 501.2 and shall not evidence water penetration.
      a. Perform a minimum of two tests in areas as directed by Architect.

C. Aluminum-framed entrances and storefronts will be considered defective if they do not pass tests and inspections.

D. Prepare test and inspection reports.

3.3 ENTRANCE DOOR HARDWARE SETS

END OF SECTION 084113

PART 1 – GENERAL

1.1 WORK INCLUDES:

A. PROVIDE:

1. Standard Builders Hardware
2. Thresholds and Weatherstripping
3. Automatic Door Operators & Actuators
4. Hardware for Aluminum Doors
5. Templates
6. Hardware Schedule
7. Keying System

1.2 RELATED WORK:

A. SPECIFIED ELSEWHERE:

1. 01340 – Shop Drawings, Product Data and Samples
2. 08111 – Steel Doors and Frames
3. 08210 – Flush Wood Doors
4. 08410 - Aluminum Entrances and Storefront
5. Division 16 - Electrical

1.3 REFERENCES:

A. Reference and Standards: Where cited, and except as modified by Project Specifications, applicable standards of following organizations apply:

1. American National Standards Institute (ANSI)
2. Builders Hardware Manufacturers Association (BHMA)
3. Door Hardware Institute (DHI)
4. National Fire Protection Association (NFPA)
5. Steel Door Institute (SDI)
6. Underwriters Laboratories (UL)

1.4 SYSTEM DESCRIPTION:

A. Performance Requirements:

1. Provide hardware for fire-rated openings in compliance with NFPA 80.

2. Provide hardware tested and listed by Underwriters Laboratories or other approved testing agency.

1.5 SUBMITTALS:

A. Make submittals in accord with Section 01340.

B. Hardware Schedule: Submit six copies of a typed vertical style hardware schedule on 8-1/2 x 11 sheets. Schedule openings by door number and locations. Indicate door and frame material, dimensions, hand, degree of opening, label condition and special information. Hardware items shall include product description and number, finish, hand, size, keying, template and special requirements. The scheduling sequence and format shall be as recommended by DHI.

C. Samples: Upon Architect / Engineer's request, submit samples showing function, finish, and design of proposed hardware items. Samples remain suppliers property and will be returned to him prior to project completion.

D. Samples and Templates: Furnish to manufacturer of wood and metal doors and frames as required for proper hardware reinforcement and preparation of their work. If required, furnish physical hardware to the door and frame manufacturer for application.

E. Catalog Cuts: Submit two sets of each type of hardware item used.

F. Include with Schedule Submittal:

1. Riser diagrams complete with door and frame elevations and operational description of openings scheduled with electrified hardware.
2. Wiring diagrams showing point to point terminations.
   Note: Schedules submitted without above requirements will be considered incomplete and will not be reviewed.

G. Certifications: Arrange for hardware supplier to visit site and certify following:

1. Hardware is installed and operating in a satisfactory manner.
2. Hardware installed is as listed on approved door hardware submittal, including changes and revisions approved by Architect during construction.
3. Submit certifications in writing addressed to Owner in care of Architect.

H. Contract Close-Out Submittal:

1. Provide the following material in a 3-ring binder clearly tabbed and organized:

   a. Final hardware schedule
   b. Wiring diagrams including detailed point to point wiring and power requirements
   c. Catalog Cuts
   d. Installation Instructions
   e. Operating and adjustment instructions
   f. Warrantees

1.6 QUALITY ASSURANCE:

A. Qualifications:

1. Contractor is responsible for:

a. Proper application and fit of door and specialty hardware in locations as indicated on drawings or as specified.
b. Items not specifically mentioned, but necessary to complete work are to be furnished matching in quality and finish of specified items in similar locations.
c. Coordinate dimensions between hardware items.
d. Furnish and install only hardware items listed on approved door hardware submittal.

2. Contractor’s selection of hardware supplier:

a. Select recognized builders hardware supplier who has been furnishing hardware in area of project for a period not less than five years.
b. Recognized supplier to have on staff an Architectural Hardware Consultant (AHC) certified by the Door and Hardware Institute.
c. Hardware supplier’s AHC to be available at all reasonable times during course of work to meet personally with Owner, Architect or Contractor for hardware consultation.

B. Electrified Hardware:

1. Unless noted otherwise in Division 16, provide electrified hardware items rated 24 VDC.
2. Coordinate electrical hardware requirements, with Division 16 work for electrical distribution, fire alarm, and security systems.

C. Automatic Operators:

1. Supplier to provide factory trained and certified technicians to install automatic operators, actuators, provide drawings interfacing electrified hardware and access control systems, provide end user training and be available for continuing support during the warranty period.

D. Pre Installation Conference: Arrange for hardware supplier to meet with installer and discuss installation of hardware, templates and any unique hardware applications.

1.7 DELIVERY, STORAGE AND HANDLING:

A. Delivery: Deliver items in manufacturer’s original package. Each item Individually packaged and carefully marked for intended opening and use. Each item complete with necessary screws, bolts, keys, instructions, and where necessary, installation templates.

B. Storage: Protect materials on the job and during installation. Provide a secure, locked, dry storage area or room in the building. Store off the floor on temporary shelving.

C. Handling: Handle items in a manner to prevent damage. Marred, defaced, damaged, and defective items will be rejected.

1.8 WARRANTY:

A. Special Warranties: Submit manufacturer's standard written product warranty signed by manufacturer's authorized official, guaranteeing to repair or replace defective products during following warranty periods.

1. Door Closers – 10 Year Warranty
2. Door Closers with Electric Components – 2 Year Warranty
3. Exit Devices – 3 Year Warranty

PART 2 – PRODUCTS

2.1 MANUFACTURERS:

A. Catalog numbers of manufacturers listed in Column 1 have been used in the hardware sets to establish quality required. Manufacturers listed in Columns 2 & 3 are approved substitutes.

B. It is the intent that approved door hardware be provided for every door on the project. Doors inadvertently omitted from the schedule shall be provided with hardware equal to doors of similar function.

ITEM	1	2	3
Hinges	Hager	Ives	
Locks & Cylinders	Schlage	No Substitute	
Exit Devices	Von Duprin	No Substitute	
Closers	LCN	No Substitute	
Operators	LCN	Horton	
Push, Pull, Kickplates	Hager	Rockwood	
Stops, Flush Bolts	Hager	Ives	Rockwood
Threshold, Cast	Pemko	National	
Weatherstrip, Thresholds	Pemko	National	
Overhead Stops	Glynn Johnson	ABH	

C. Designations: Following abbreviations to identify list manufacturers.

ABH	Architectural Builders Hardware, Itasca, IL
Glynn Johnson	Glynn Johnson, Indianapolis, IN
Hager	C. Hager & Sons, St. Louis, MO
Horton	Horton Automatics, Corpus Christie, TX
Ives	Ives, Indianapolis, IN
LCN	LCN Closers, Princeton, IL
National	National Guard, Memphis, TN
Pemko	Pemko Mfg., Memphis, TN
Rockwood	Rockwood Mfg., Rockwood, PA
Schlage	Schlage Lock Company, Charlotte, N.C.
Von Duprin	Von Duprin, Indianapolis, IN

2.2 MATERIALS:

A. Screws, Fasteners, and Tools:

1. Finish exposed fasteners to match item fastened. Make fasteners of the same metal as item fastened, except use stainless steel for aluminum items.

B. Hinges:

1. Interior door hinges: steel, plated .134 minimum thickness except as noted. Provide heavy weight .180 minimum thickness on doors wider than 3’0. Exterior door hinges: heavy weight .180 minimum thickness. Hinge size 4-1/2 x 4-1/2 unless otherwise noted in this schedule.

2. Provide quantities as follows unless otherwise noted in the schedule:

   a. For doors up to 60 inches in height, provide 1 pair of hinges; for doors 60 inches to 90 inches in height, provide 1-1/2 pairs of hinges; for doors over 90 inches and up to 120 inches in height, provide 1 additional hinge for each 30 inches of height.

3. Manufacturers / Series:

Hager	Ives
BB1199	5BB1HW
BB1168	5BB1HW
BB1279	5BB1

C. Continuous Hinges:

1. Aluminum, Heavy Duty

2. Manufacturers / Series:

Hager		Pemko
Concealed	780-112HD	CFMHD-SLF
	780-224HD	CFMHD

Note: Verify that continuous hinges are compatible with aluminum doors before ordering.

D. Locks and Latches:

1. Locks and latches: Heavy duty cylindrical type as listed in hardware sets.

2. Manufacturers / Series:

   Schlage

   ND Series – “Athens”

3. Provide knurled levers on doors leading to hazardous areas. Hazardous areas as defined by the Illinois Accessibility Code

E. Exit Devices:

1. Provide Von Duprin exit devices with features, functions and options as shown in the hardware sets.

2. Exit Devices: Of the push pad design with grooved interior mechanism case. Device shall incorporate a fluid dampener which decelerates the push pad on its return stroke eliminating most noise associated with the device operation. Provide glass bead kits to provide clearance for raised glass trim.

3. Lever trim shall incorporate a break away feature. When locked the rigid lever will break away when more than 35 pounds of torque is applied.

F. Closers:

1. Provide LCN door closers with features, functions and options shown in the hardware sets.

2. Materials and construction: High strength cast iron cylinder with full rack and pinion action. Spring power adjustable to 50%. Provide separate non-critical screw valves for regulation of latch speed, sweep speed, and back check. Hydraulic fluid type requiring no seasonal adjustment for temperatures ranging from 120 degrees F to –30 degrees F.

3. Provide brackets, drop plates, spacer blocks, and accessories required to insure proper installation.

4. Parallel arms: Extra duty forged steel main arm, forearm and shoe.
5. Provide door closers on fire labeled openings.

G. Automatic Operators:

1. Automatic Operators: Low energy, slow opening type with a maximum opening force of 15 LBF to stop door swing.
2. Operator operates as conventional hydraulic door closer if it is deactivated by the fire alarm system or loss of power.
3. Electric motor / clutch assembly designed for quiet and smooth operation. The clutch provides a break away function to prevent damage to the operator if the door is forced closed during the powered opening swing.
4. Operator contains an on board, low voltage power supply providing 12 and 24 VDC output for actuators. Input and output power protected with replaceable slow blow fuses. Provide terminal strip for fire alarm input which would deactivate the unit.
5. Actuators: Hardwired low voltage actuator with round 4-1/2 inch diameter heavy stainless steel touch plate with engraved handicap symbol, blue filled.
6. Manufacturer / Series:

LCN	Horton
4642	4000LE

H. Push Pull Bars:

1. Push/Pull Bars: 1-inch diameter bar stock. Push bar CTC 5 inches less than door width. Top of pull and lock stile end of push bar to back concealed mounted, Pull 12 inches CTC.
2. Manufacturers / Series:

Hager	Rockwood
160D	15847

I. Pull Plates:

1. Pull plates: 4 x 16 .050 stainless steel with radius corners with 1″ diameter 8″ CTC round pull

2. Manufacturers / Series:

Hager	Rockwood
44G	70RC X 111A

J. Push Plates:

1. Push plates: 8 inches wide x 16 inches high (except reduce width to one inch less than lock stile when required). Stainless steel .050 with radius corners.

K. Kickplates:

1. Kickplates: .050 stainless steel 10 inches high (except reduce height ½ inch less than bottom rail when required) x 2 inches less than door width on singles and 1 inch less on pairs. Fasteners full threaded, countersunk, undercut screws.

L. Stops, Flush Bolts, Dust Proof Strikes:

1. Manufacturers / Series:

Hager	Ives	Rockwood
236W	WS407CVX	400
232W	WS407CCV	403
283D	358	557
243F	438	442
282D	458	555
280X	DP2	570

M. Thresholds:

1. Cast abrasive aluminum fluted ½ x 5 inch. Supply stainless steel machine screws and expansion anchors.

2. Manufacturers / Series:

Pemko	National
1715AK	4425

N. Door Bottoms and Weatherstripping:

O. Manufacturers / Series:

Pemko	National
315CN	200NA
S88D	5050B
346C	16A

2.3 FINISHES:

	US SYMBOL	ANSI SYMBOL	DESCRIPTION
Continuous Hinges	Clear Aluminum		Clear Anodized
Hinges, Interior	US26D	652	Satin Chrome
Exit Devices	US26D	626	Satin Chrome
Locks	US26D	626	Satin Chrome
Closers	AL	689	Aluminum Powder Coat
O.H. Holders	US32D	630	Satin Stainless Steel
Stops, Flush Bolts	US26D	626	Satin Chrome
Push,Pull,Kickplates	US32D	630	Satin Stainless Steel

2.4 KEYS AND KEYING:

A. Cylinders: Schlage Everest Patented. Master key to owner’s existing or a new system as required.

B. Keys: Standard bow embossed on one side. Provide cut keys as follows:

1. Master keys – 10 each, maximum
2. Change keys – 4 each per change, maximum

PART 3 – EXECUTION

3.1 EXAMINATION:

A. Verify doors and frames are ready to receive work and dimensions are as indicated on shop drawings or as instructed by manufacturers.

B. Verify power supply is available to electrically operated devices.

C. Beginning of installation means acceptance of existing conditions.

3.2 INSTALLATION:

A. General:

1. Install each hardware item in accordance with each manufacturer’s instructions and recommendations.
2. Install no hardware until substrate finishes are complete.
3. Wherever cutting and fitting is required to install hardware onto or into surfaces, which are later to be painted or otherwise finished, install each item completely then remove and stored during application of finishes; Reinstall upon completion of finishing operations.
4. Set items level, plumb and true to line and location.
5. Adjust and reinforce attachment substrate as necessary for a secure installation.

6. Drill and countersink items not factory prepared for fasteners.
7. Space fasteners and anchors per manufacturer's instructions and in accordance with industry standards.
8. Do not install hardware on doors, which have been improperly prepared.
9. Attach wall mounted hardware to concealed wall blocking. Do not install
wall mounted hardware where wall blocking has not been installed and arrange for blocking to be installed before proceeding.

B. Fire-Rated Openings:

1. In addition to previous requirements, conform to NFPA 80 and BOCA covering installations of fire door assemblies.

2. Refer to instructions from door and frame manufacturer's regarding special hardware installation requirements, including function holes, undercutting and minimum clearances between hardware cutouts.

C. Installation Templates, Instruction Sheets and Schedules: Retain copies of templates, instruction sheets, schedules, installation details and similar data regarding hardware, maintenance and servicing. See Part 1 under Contract Closeout Submittals for assembly and distribution of data.

D. Mounting Heights: Heights given are centerline heights ups from finish floor unless stated: Heights given "Number to Number" indicate one height within limits given. Where heights of items are not listed, install in accordance with recommendations of DHI.

1.	Bottom Hinge	10 to 13 inches from floor
2.	Top Hinge	6 to 8 inches from head
3.	Intermediate Hinge	Equally spaced
4.	Lock Lever	36 to 40-5/16 inches
5.	Deadlocks	48 inches
6.	Push Bar	42 inches
7.	Push Plate	45 inches
8.	Pull	42 inches

E. Installation Requirements: In addition to mounting heights specified above, install hardware as follows:

1. Hinges:
   a. Hang doors within following tolerances: 1/8" maximum between door and frame, and 1/8" maximum between meeting edges of pairs of doors.
   b. Provide under door clearance at fire assemblies per NFPA 80.
   c. Where shimming is necessary for proper door / frame installation, use only metal shims.
   d. Install electric hinges or pivots as center hinge or second hinge from
   Bottom where doors have 2 pairs of hinges.
2. Locks: Install only curved lip strikes and dust box behind each strike.
3. Exit Devices:

a. Center exit device cases on door stiles, and equally spaced from each door edge, unless required otherwise by manufacturer's templates or instructions.

4. Closers:
   a. Install closers to permit maximum degree of door swing allowed by job conditions. Follow manufacturer's instructions.

5. Door Stops:
   a. Install stops to permit maximum degree of door swing allowed by job conditions.
   b. Locate floor stops so as not to create a tripping hazard, and to catch door at a point 6 inches in from latch edge, but in no case further than 1/3 door width measured from latch edge.
   c. Wall stops intended for knobs and levers are to be located centered on spindle.

6. Doorplates: (Armor, Kick and Mop Plates)
   a. Armor and kick plates: Install on push side of single acting doors.
   b. Unless otherwise indicated install ¼ inch up from door bottom.

7. Threshold:
   a. Scribe and cut to fit profiles of door jambs with mitered corners and precision made joints.
   b. Join units with concealed welds or concealed mechanical devices.
   c. Cut smooth openings for mullions, bolts and similar items.
   d. At exterior doors and elsewhere as indicated, set thresholds in bed of butyl rubber sealant, completely fill voids to exclude moisture.
   e. At exterior doors, install bevel of threshold aligned with exterior face of door, unless indicated otherwise by detail or threshold manufacturer's instructions.
   f. Install thresholds level.
   g. Do not install thresholds over carpet. At fire rated doors do not install the thresholds over any finish material, unless material is noncombustible, e.g. ceramic tile, terrazzo or concrete.

F. Miscellaneous Hardware:

1. Push / Pull Sets: Center push / pull sets on doors stiles unless noted otherwise on plans. Mount push bar centered 42 inches above finished floor.

3.3 FIELD QUALITY CONTROL:

A. Manufacturer's Field Service:

1. Closer: After air handling system has been balanced arrange for closer to be finally adjusted by person trained by closer manufacturer or closer manufacturer's representative.

   a. Adjust closer to take 3 seconds minimum for door to swing from a 70 degree position to 3″ from latching position.

   b. Adjust closer not to exceed 5 lbs. opening force.

Exception: Fire doors as required to close & latch.

3.4 ADJUSTING:

A. Adjusting & Cleaning:

1. Adjust and check each item of hardware and each door to insure proper operation and function of each unit.
2. Lubricate moving parts with graphite-type lubricant unless otherwise recommended by manufacturer.
3. Replace hardware, which cannot be lubricated and adjusted to operate freely and smoothly.
4. Final Adjustment:

a. Whenever hardware installation is made more than 1 month prior to acceptance of work, make final adjustment and check of hardware during week immediately prior to acceptance, unless otherwise directed by Architect.
b. Clean and re-lubricate operation items as necessary to restore proper functioning and finish of hardware and doors.
c. Make final adjustment of locksets and closers to compensate for operation of heating and ventilating systems under supervision of manufacturer’s representative.

3.5 PROTECTION AND CLEANING:

A. Installed Hardware: Protect door hardware against damage.

B. Installed Doors:

1. Do not prop doors open using any item wedged between hinge jamb and door.
2. Use only rubber stops, cardboard or rope.

3. Do not use unprotected wood wedges under wood doors.

4. Do not use bare wire or other unprotected means of securing doors in open position, which may mar door or hardware.

C. Job Acceptance: Prior to acceptance of job, clean hardware surfaces on both interior and exterior doors of mortar, plaster, paint caulking and other contaminants. Replace hardware damaged after installation where finish cannot be restored after cleaning.

3.6 DEMONSTRATION:

A. Instructions: Provide instruction in operation and maintenance of key control system.

3.7 HARDWARE SCHEDULE:

A. Provide and install hardware conforming to project specifications in sets according to the following schedule.

HDWE. SET 01
Door 01
Each Door to Have:

	Continuous Hinges 780-224HD
1	Exit Device 99NL-ALK
2	Cylinders
1	Closer 4111-SPR-H-CUSH
1	Kickplate
1	Threshold 1715AK
1	Door Sweeps 315CN
1	Weatherstrip S88D
1	Rain Drip 346C x full frame width

HDWE. SET 02
Doors 02, 03, 04, 112, 113
Each Door to Have:

	Continuous Hinges 780-224HD
1	Exit Device 99EO-ALK
1	Cylinder
1	Closer 4111-SPR -CUSH
1	Kickplate
1	Threshold 1715AK
1	Door Sweeps 315CN
1	Weatherstrip S88D
1	Rain Drip 346C x full frame widt

HDWE. SET 03
Doors 05
Each Pair to Have:

	Hinges BB1168
2	Push Plate
2	Pull Plate
2	Closer 4111-H-CUSH
2	Kick Plate

HDWE. SET 04
Doors 06, 08
Each Door to Have:

	Hinges BB1168
1	Push Plate
1	Pull Plate
1	Closer 4011-H
1	Kick Plate
1	Wall Stop 232W

HDWE. SET 05
Door 07
Each Door to Have:

	Hinges BB1279
1	Lockset ND80PD

1 Overhead Stop 450S

HDWE. SET 06
Doors 09, 106, 109
Each Door to Have:

Hinges BB1168
1 Push Plate
1 Pull Plate
1 Closer 4111-H-CUSH
1 Kick Plate

HDWE. SET 07
Door 10
Each Door to Have:

Hinges BB1168
1 Push Plate
1 Pull Plate
1 Closer 4111-H
1 Kick Plate
1 Wall Stop 232

HDWE. SET 08
Door 11
Each Door to Have:

Hinges BB1279
1 Lockset ND53PD
1 Kick Plate
1 Wall Stop 236W

HDWE. SET 09
Door 12
Each Door to Have:

Hinges BB1279
1 Lockset ND80PD
1 Closer 4111-CUSH
1 Kick Plate
1 Gasket S88D

HDWE. SET 10
Doors 13, 14
Each Pair to Have:

Hinges BB1168
2 Push Plate
2 Pull Plate
2 Closer 4111-H (mount for 180 degree swing)
2 Kick Plate
2 Wall Stop 232W

HDWE. SET 11
Door 100
Each Door to Have:

Continuous Hinge 780-112HD

1 Exit Device CD99NL-OP
2 Cylinders
1 Offset Door Pull 12L
1 Operator 4642
1 Overhead Stops 100S
1 Actuators 8310-856T
1 Surface Mount Box 8310-868S
1 Weather Ring 8310-800
1 Threshold 1715AK
1 Door Sweep 315CN
Perimeter Weatherstrip integral with Frame

HDWE. SET 12
Door 101
Each Door to Have:

Continuous Hinge 780-112HD
1 Exit Device CD99EO
1 Cylinder
1 Offset Door Pull 12L
1 Operator 4642
1 Overhead Stops 100S
1 Actuators 8310-856T
1 Threshold 1715AK
1 Door Sweep 315CN
Perimeter Weatherstrip integral with Frame

HDWE. SET 13
Doors 102, 103, 105
Each Door to Have:

Hinges BB1279
1 Lockset ND53PD
1 Overhead Stop 450S

HDWE. SET 14
Door 104
Each Door to Have:

Hinges BB1279
1 Lockset ND53PD
1 Wall Stop 236W

HDWE. SET 15
Doors 107, 108
Each Door to Have:

Continuous Hinge 780-112HD
1 Exit Device 99EO-ALK
1 Cylinder
1 Closer 4111-SPR-H-CUSH x 18 x 30 x 61
1 Threshold 1715AK
1 Door Sweep 315CN
Perimeter Weatherstrip integral with Frame

HDWE. SET 16
Door 110
Each Door to Have:

	Hinges BB1168
1	Privacy Set ND40S
1	Closer 4011-H
1	Kickplate
1	Wall Stop 236W

HDWE. SET 17
Doors 200, 203, 204
Each Door to Have:

	Hinges BB1279
1	Lockset ND80PD
1	Wall Stop 232W

HDWE. SET 18
Door 201
Each Door to Have:

	Hinges BB1168
1	Lockset ND80PD
1	Closer 4111
1	Gasket S88D

End Section 08700

SECTION 088000 - GLAZING

PART 1 - GENERAL

1.1 SUMMARY

A. Section includes:
1. Glass for doors, interior borrowed lites, and storefront framing.
2. Glazing sealants and accessories.

1.2 COORDINATION

A. Coordinate glazing channel dimensions to provide necessary bite on glass, minimum edge and face clearances, and adequate sealant thicknesses, with reasonable tolerances.

1.3 ACTION SUBMITTALS

A. Product Data: For each type of product.

B. Glass Samples: For each type of glass product other than clear monolithic vision glass; 12 inches square.

C. Glazing Schedule: List glass types and thicknesses for each size opening and location. Use same designations indicated on Drawings.

D. Delegated-Design Submittal: For glass indicated to comply with performance requirements and design criteria, including analysis data signed and sealed by the qualified professional engineer responsible for their preparation.

1.4 INFORMATIONAL SUBMITTALS

A. Preconstruction adhesion and compatibility test report.

1.5 QUALITY ASSURANCE

A. Sealant Testing Agency Qualifications: An independent testing agency qualified according to ASTM C 1021 to conduct the testing indicated.

1.6 PRECONSTRUCTION TESTING

A. Preconstruction Adhesion and Compatibility Testing: Test each glass product, tape sealant, gasket, glazing accessory, and glass-framing member for adhesion to and compatibility with elastomeric glazing sealants.
1. Testing is not required if data are submitted based on previous testing of current sealant products and glazing materials matching those submitted.

1.7 WARRANTY

A. Manufacturer's Special Warranty for Coated-Glass Products: Manufacturer agrees to replace coated-glass units that deteriorate within specified warranty period. Deterioration of coated glass is

defined as defects developed from normal use that are not attributed to glass breakage or to maintaining and cleaning coated glass contrary to manufacturer's written instructions. Defects include peeling, cracking, and other indications of deterioration in coating.
1. Warranty Period: Ten years from date of Substantial Completion.

B. Manufacturer's Special Warranty for Insulating Glass: Manufacturer agrees to replace insulating-glass units that deteriorate within specified warranty period. Deterioration of insulating glass is defined as failure of hermetic seal under normal use that is not attributed to glass breakage or to maintaining and cleaning insulating glass contrary to manufacturer's written instructions. Evidence of failure is the obstruction of vision by dust, moisture, or film on interior surfaces of glass.
1. Warranty Period: Ten years from date of Substantial Completion.

PART 2 - PRODUCTS

2.1 MANUFACTURERS
1. Agalite; Hartung Glass Industries.
2. AGC Glass Company North America.
3. Cardinal Glass Industries.
4. Cristancurva.
5. Dlubak Corporation.
6. Gardner Glass, Inc.
7. GGI; General Glass International.
8. Glasswerks LA, Inc.
9. GTI; Glaz-Tech Industries.
10. Guardian Industries Corp.
11. JE Berkowitz, LP.
12. Northwestern Industries, Inc.
13. Oldcastle BuildingEnvelope.
14. Pilkington North America Inc.
15. PPG Industries, Inc.
16. Schott North America Inc.
17. Tecnoglass.
18. Trulite Glass & Aluminum Solutions, LLC.
19. Vetrolect Saint-Gobain.
20. Viracon Inc.

2.2 PERFORMANCE REQUIREMENTS

A. Delegated Design: Engage a qualified professional engineer, as defined in Section 014000 "Quality Requirements," to design glazing.

B. Structural Performance: Glazing shall withstand the following design loads within limits and under conditions indicated determined according to the International Building Code and ASTM E 1300.
1. Design Wind Pressures: As indicated on Drawings and IBC 2006.

C. Safety Glazing: Where safety glazing is indicated, provide glazing that complies with 16 CFR 1201, Category II.

D. Thermal and Optical Performance Properties: Provide glass with performance properties specified, as indicated in manufacturer's published test data, based on procedures indicated below:

1. U-Factors: Center-of-glazing values, according to NFRC 100 and based on LBL's WINDOW 5.2 computer program, expressed as Btu/sq. ft. x h x deg F.
2. Solar Heat-Gain Coefficient and Visible Transmittance: Center-of-glazing values, according to NFRC 200 and based on LBL's WINDOW 5.2 computer program.
3. Visible Reflectance: Center-of-glazing values, according to NFRC 300.

2.3 GLASS PRODUCTS, GENERAL

A. Glazing Publications: Comply with published recommendations of glass product manufacturers and organizations below unless more stringent requirements are indicated. See these publications for glazing terms not otherwise defined in this Section or in referenced standards.
1. GANA Publications: "Glazing Manual."
2. IGMA Publication for Insulating Glass: SIGMA TM-3000, "North American Glazing Guidelines for Sealed Insulating Glass Units for Commercial and Residential Use."

B. Safety Glazing Labeling: Where safety glazing is indicated, permanently mark glazing with certification label of the SGCC or another certification agency acceptable to authorities having jurisdiction. Label shall indicate manufacturer's name, type of glass, thickness, and safety glazing standard with which glass complies.

C. Insulating-Glass Certification Program: Permanently marked either on spacers or on at least one component lite of units with appropriate certification label of IGCC.

D. Thickness: Where glass thickness is indicated, it is a minimum. Provide glass that complies with performance requirements and is not less than the thickness indicated.

E. Strength: Where annealed float glass is indicated, provide annealed float glass, heat-strengthened float glass, or fully tempered float glass. Where heat-strengthened float glass is indicated, provide heat-strengthened float glass or fully tempered float glass. Where fully tempered float glass is indicated, provide fully tempered float glass.

2.4 GLASS PRODUCTS

A. Clear Annealed Float Glass: ASTM C 1036, Type I, Class 1 (clear), Quality-Q3.

B. Fully Tempered Float Glass: ASTM C 1048, Kind FT (fully tempered), Condition A (uncoated) unless otherwise indicated, Type I, Class 1 (clear) or Class 2 (tinted) as indicated, Quality-Q3.

C. Heat-Strengthened Float Glass: ASTM C 1048, Kind HS (heat strengthened), Type I, Condition A (uncoated) unless otherwise indicated, Type I, Class 1 (clear) or Class 2 (tinted) as indicated, Quality-Q3.

2.5 INSULATING GLASS

A. Insulating-Glass Units: Factory-assembled units consisting of sealed lites of glass separated by a dehydrated interspace, qualified according to ASTM E 2190.
   1. Sealing System: Dual seals.
   2. Spacer: Manufacturer's standard spacer material and construction.

2.6 GLAZING SEALANTS

A. General:
   1. Compatibility: Compatible with one another and with other materials they contact, including glass products, seals of insulating-glass units, and glazing channel substrates, under conditions of service and application, as demonstrated by sealant manufacturer based on testing and field experience.
   2. Suitability: Comply with sealant and glass manufacturers' written instructions for selecting glazing sealants suitable for applications indicated and for conditions existing at time of installation.
   3. Field-applied sealants shall have a VOC content of not more than 250 g/L.
   4. Colors of Exposed Glazing Sealants: As selected by Architect from manufacturer's full range.

B. Glazing Sealant: Neutral-curing silicone glazing sealant complying with ASTM C 920, Type S, Grade NS, Class 100/50, Use NT.
   1. Dow Corning Corporation; 790.
   2. GE Advanced Materials - Silicones; SilPruf LM SCS2700.
   3. May National Associates, Inc.; Bondaflex Sil 290.
   4. Pecora Corporation; 890NST.
   5. Sika Corporation U.S.; Sikasil WS-290.
   6. Tremco Incorporated; Spectrem 1.

2.7 GLAZING TAPES

A. Back-Bedding Mastic Glazing Tapes: Preformed, butyl-based, 100 percent solids elastomeric tape; nonstaining and nonmigrating in contact with nonporous surfaces; with or without spacer rod as recommended in writing by tape and glass manufacturers for application indicated; and complying with ASTM C 1281 and AAMA 800 for products indicated below:
   1. AAMA 804.3 tape, where indicated.
   2. AAMA 806.3 tape, for glazing applications in which tape is subject to continuous pressure.
   3. AAMA 807.3 tape, for glazing applications in which tape is not subject to continuous pressure.

B. Expanded Cellular Glazing Tapes: Closed-cell, PVC foam tapes; factory coated with adhesive on both surfaces; and complying with AAMA 800 for the following types:
   1. AAMA 810.1, Type 1, for glazing applications in which tape acts as the primary sealant.
   2. AAMA 810.1, Type 2, for glazing applications in which tape is used in combination with a full bead of liquid sealant.

2.8 MISCELLANEOUS GLAZING MATERIALS

A. Cleaners, Primers, and Sealers: Types recommended by sealant or gasket manufacturer.

B. Setting Blocks: Elastomeric material with a Shore, Type A durometer hardness of 85, plus or minus 5.

C. Spacers: Elastomeric blocks or continuous extrusions of hardness required by glass manufacturer to maintain glass lites in place for installation indicated.

D. Edge Blocks: Elastomeric material of hardness needed to limit glass lateral movement (side walking).

E. Cylindrical Glazing Sealant Backing: ASTM C 1330, Type O (open-cell material), of size and density to control glazing sealant depth and otherwise produce optimum glazing sealant performance.

PART 3 - EXECUTION

3.1 GLAZING, GENERAL

A. Comply with combined written instructions of manufacturers of glass, sealants, gaskets, and other glazing materials, unless more stringent requirements are indicated, including those in referenced glazing publications.

B. Protect glass edges from damage during handling and installation. Remove damaged glass from Project site and legally dispose of off Project site. Damaged glass includes glass with edge damage or other imperfections that, when installed, could weaken glass, impair performance, or impair appearance.

C. Apply primers to joint surfaces where required for adhesion of sealants, as determined by preconstruction testing.

D. Install setting blocks in sill rabbets, sized and located to comply with referenced glazing publications, unless otherwise required by glass manufacturer. Set blocks in thin course of compatible sealant suitable for heel bead.

E. Do not exceed edge pressures stipulated by glass manufacturers for installing glass lites.

F. Provide spacers for glass lites where length plus width is larger than 50 inches.

G. Provide edge blocking where indicated or needed to prevent glass lites from moving sideways in glazing channel, as recommended in writing by glass manufacturer and according to requirements in referenced glazing publications.

3.2 TAPE GLAZING

A. Position tapes on fixed stops so that, when compressed by glass, their exposed edges are flush with or protrude slightly above sightline of stops.

B. Install tapes continuously, but not necessarily in one continuous length. Do not stretch tapes to make them fit opening.

C. Cover vertical framing joints by applying tapes to heads and sills first, then to jambs. Cover horizontal framing joints by applying tapes to jambs, then to heads and sills.

D. Place joints in tapes at corners of opening with adjoining lengths butted together, not lapped. Seal joints in tapes with compatible sealant approved by tape manufacturer.

E. Apply heel bead of elastomeric sealant.

F. Center glass lites in openings on setting blocks, and press firmly against tape by inserting dense compression gaskets formed and installed to lock in place against faces of removable stops. Start gasket applications at corners and work toward centers of openings.

G. Apply cap bead of elastomeric sealant over exposed edge of tape.

3.3 GASKET GLAZING (DRY)

A. Cut compression gaskets to lengths recommended by gasket manufacturer to fit openings exactly, with allowance for stretch during installation.

B. Insert soft compression gasket between glass and frame or fixed stop so it is securely in place with joints miter cut and bonded together at corners.

C. Installation with Drive-in Wedge Gaskets: Center glass lites in openings on setting blocks, and press firmly against soft compression gasket by inserting dense compression gaskets formed and installed to lock in place against faces of removable stops. Start gasket applications at corners and work toward centers of openings. Compress gaskets to produce a weathertight seal without developing bending stresses in glass. Seal gasket joints with sealant recommended by gasket manufacturer.

D. Installation with Pressure-Glazing Stops: Center glass lites in openings on setting blocks, and press firmly against soft compression gasket. Install dense compression gaskets and pressure-glazing stops, applying pressure uniformly to compression gaskets. Compress gaskets to produce a weathertight seal without developing bending stresses in glass. Seal gasket joints with sealant recommended by gasket manufacturer.

E. Install gaskets so they protrude past face of glazing stops.

3.4 CLEANING AND PROTECTION

A. Immediately after installation remove nonpermanent labels and clean surfaces.

B. Protect glass from contact with contaminating substances resulting from construction operations. Examine glass surfaces adjacent to or below exterior concrete and other masonry surfaces at frequent intervals during construction, but not less than once a month, for buildup of dirt, scum, alkaline deposits, or stains.
   1. If, despite such protection, contaminating substances do come into contact with glass, remove substances immediately as recommended in writing by glass manufacturer. Remove and replace glass that cannot be cleaned without damage to coatings.

C. Remove and replace glass that is damaged during construction period.

3.5 MONOLITHIC GLASS SCHEDULE

A. Glass Type: Clear annealed, heat-strengthened, fully tempered float glass.

   1. Minimum Thickness: 6 mm.
   2. Safety glazing required.

3.6 INSULATING GLASS SCHEDULE

A. Glass Type: Low-E-coated, clear insulating glass.
   1. Basis-of-Design Product: Old Castle Building Envelope Sunglass Low-e #2.
   2. Overall Unit Thickness: 1 inch.
   3. Minimum Thickness of Each Glass Lite: 6 mm.
   4. Outdoor Lite: Fully tempered float glass.
   5. Interspace Content: Air.
   6. Indoor Lite: Fully tempered float glass.
   7. Low-E Coating: Pyrolytic on second surface.
   8. Winter Nighttime U-Factor: 0.29 maximum.
   9. Summer Daytime U-Factor: 0.27 maximum.
   10. Visible Light Transmittance: 50 percent minimum.
   11. Solar Heat Gain Coefficient: 0.39 maximum.
   12. Safety glazing required.

END OF SECTION 088000

SECTION 089119 - FIXED LOUVERS

PART 1 - GENERAL

1.1 SUMMARY

A. Section includes fixed, extruded-aluminum louvers.

B. Related Requirements:
1. Section 081113 "Hollow Metal Doors and Frames" for louvers in hollow-metal doors.
2. Section 081416 "Flush Wood Doors" for louvers in flush wood doors.

1.2 ACTION SUBMITTALS

A. Product Data: For each type of product.
1. For louvers specified to bear AMCA seal, include printed catalog pages showing specified models with appropriate AMCA Certified Ratings Seals.

B. Shop Drawings: For louvers and accessories. Include plans, elevations, sections, details, and attachments to other work. Show frame profiles and blade profiles, angles, and spacing.

C. Samples: For each type of metal finish required.

PART 2 - PRODUCTS

2.1 PERFORMANCE REQUIREMENTS

A. Louver Performance Ratings: Provide louvers complying with requirements specified, as demonstrated by testing manufacturer's stock units identical to those provided, except for length and width according to AMCA 500-L.

2.2 FIXED, EXTRUDED-ALUMINUM LOUVERS

A. Horizontal, Wind-Driven-Rain-Resistant Louver (All Exterior Louvers):
1. Manufacturers/Products:
a. Air Balanace Inc., a Mestek Company.
b. Air Flow Company, Inc.
c. Airolite Company, LLC (The).
d. All-Lite Architectural Products.
e. American Warming and Ventilating; a Mestek Company.
f. Architectural Louvers; Harray, LLC.
g. Arrow United Industries; a division of Mestek, Inc.
h. Carnes Company, Inc.
i. Cesco Products; ad division of Mestek, Inc.
j. Construction Specialties, Inc.
k. Dowco Products Group; Safe Air of Illinois.
l. Greenheck Fan Corporation.
m. Industrial Louvers, Inc.
n. Louvers & Dampers; a division of Mestek, Inc.
o. Metal Form Manufacturing, Inc.

p. MCA Manufacturing, Inc.
q. Nystrom, Inc.
r. Pottorff.
s. Reliable Products, Inc.
t. Ruskin Company; Tomkins PLC.
u. United Enertech.
v. Vent Products Co., Inc.

2. Louver Depth: 4 inches.
3. Frame and Blade Nominal Thickness: Not less than 0.060 inch for blades and 0.080 inch for frames.
4. Louver Performance Ratings:
   a. Free Area: Not less than 7.0 sq. ft. for 48-inch- wide by 48-inch- high louver.
   b. Air Performance: Not more than 0.10-inch wg static pressure drop at 800-fpm free-area exhaust intake velocity.
   c. Wind-Driven Rain Performance: Not less than 95 percent effectiveness when subjected to a rainfall rate of 3 inches per hour and a wind speed of 29 mph at a core-area intake velocity of 500 fpm.
5. AMCA Seal: Mark units with AMCA Certified Ratings Seal.

2.3 FIXED, FORMED-METAL LOUVERS

A. Horizontal, Nondrainable-Blade Louver (All Internal Louvers):
1. Manufacturers/Products:
   a. Air Balanace Inc., a Mestek Company.
   b. Air Flow Company, Inc.
   c. Airolite Company, LLC (The).
   d. All-Lite Architectural Products.
   e. American Warming and Ventilating; a Mestek Company.
   f. Architectural Louvers; Harray, LLC.
   g. Arrow United Industries; a division of Mestek, Inc.
   h. Carnes Company, Inc.
   i. Cesco Products; ad division of Mestek, Inc.
   j. Construction Specialties, Inc.
   k. Dowco Products Group; Safe Air of Illinois.
   l. Greenheck Fan Corporation.
   m. Industrial Louvers, Inc.
   n. Louvers & Dampers; a division of Mestek, Inc.
   o. Metal Form Manufacturing, Inc.
   p. MCA Manufacturing, Inc.
   q. Nystrom, Inc.
   r. Pottorff.
   s. Reliable Products, Inc.
   t. Ruskin Company; Tomkins PLC.
   u. United Enertech.
   v. Vent Products Co., Inc.
2. Louver Depth: 4 inches.
3. Blade Profile: Plain blade without center baffle.
4. Frame and Blade Material and Nominal Thickness: Galvanized-steel sheet, not less than 0.052 inch for frames and 0.040 inch for blades.
5. Mullion Type: Semirecessed.
6. Louver Performance Ratings:
   a. Free Area: Not less than 8.0 sq. ft. for 48-inch- wide by 48-inch- high louver.
   b. Point of Beginning Water Penetration: Not less than 550 fpm.

c. Air Performance: Not more than 0.10-inch wg static pressure drop at 550-fpm free-area exhaust intake velocity.

7. AMCA Seal: Mark units with AMCA Certified Ratings Seal.

2.4 LOUVER SCREENS

A. General: Provide screen at each exterior louver.
   1. Screen Location for Fixed Louvers: Interior face.
   2. Screening Type: Bird screening.

B. Louver Screen Frames: Same type and form of metal as indicated for louver to which screens are attached.

C. Louver Screening for Aluminum Louvers:
   1. Bird Screening: Stainless steel, 1/2-inch- square mesh, 0.047-inch wire.

2.5 MATERIALS

A. Aluminum Extrusions: ASTM B 221, Alloy 6063-T5, T-52, or T6.

B. Aluminum Sheet: ASTM B 209, Alloy 3003 or 5005 with temper as required for forming, or as otherwise recommended by metal producer for required finish.

C. Galvanized-Steel Sheet: ASTM A 653/A 653M, G60 zinc coating, mill phosphatized.

D. Fasteners: Use types and sizes to suit unit installation conditions.
   1. Use hex-head or Phillips pan-head screws for exposed fasteners unless otherwise indicated.
   2. For fastening aluminum, use aluminum or 300 series stainless-steel fasteners.
   3. For fastening galvanized steel, use hot-dip-galvanized steel or 300 series stainless-steel fasteners.
   4. For color-finished louvers, use fasteners with heads that match color of louvers.

E. Bituminous Paint: Cold-applied asphalt emulsion complying with ASTM D 1187.

2.6 FABRICATION

A. Fabricate frames, including integral sills, to fit in openings of sizes indicated, with allowances made for fabrication and installation tolerances, adjoining material tolerances, and perimeter sealant joints.

B. Join frame members to each other and to fixed louver blades with fillet welds concealed from view unless otherwise indicated or size of louver assembly makes bolted connections between frame members necessary.

2.7 ALUMINUM FINISHES

A. High-Performance Organic Finish: Two-coat fluoropolymer finish complying with AAMA 2605 and containing not less than 70 percent PVDF resin by weight in color coat. Prepare, pretreat, and apply coating to exposed metal surfaces to comply with coating and resin manufacturers' written instructions.
   1. Color and Gloss: As selected by Architect from manufacturer's full range.

2.8 GALVANIZED-STEEL SHEET FINISHES

A. Finish louvers after assembly.

B. Surface Preparation: Clean surfaces with nonpetroleum solvent so surfaces are free of oil and other contaminants. After cleaning, apply a conversion coating compatible with the organic coating to be applied over it. Clean welds, mechanical connections, and abraded areas and repair according to ASTM A 780.

C. Baked-Enamel or Powder-Coat Finish: Immediately after cleaning and pretreating, apply manufacturer's standard two-coat, baked-on finish consisting of prime coat and thermosetting topcoat, with a minimum dry film thickness of 2 mils.
   1. Color and Gloss: As selected by Architect from manufacturer's full range.

PART 3 - EXECUTION

3.1 INSTALLATION

A. Locate and place louvers level, plumb, and at indicated alignment with adjacent work.

B. Use concealed anchorages where possible. Provide brass or lead washers fitted to screws where required to protect metal surfaces and to make a weathertight connection.

C. Provide perimeter reveals and openings of uniform width for sealants and joint fillers, as indicated.

D. Protect unpainted galvanized and nonferrous-metal surfaces that are in contact with concrete, masonry, or dissimilar metals from corrosion and galvanic action by applying a heavy coating of bituminous paint or by separating surfaces with waterproof gaskets or nonmetallic flashing.

3.2 ADJUSTING

A. Restore louvers damaged during installation and construction so no evidence remains of corrective work. If results of restoration are unsuccessful, as determined by Architect, remove damaged units and replace with new units.

END OF SECTION 089119

SECTION 092216 - NON-STRUCTURAL METAL FRAMING

PART 1 - GENERAL

1.1 SUMMARY

A. Section Includes:
1. Non-load-bearing steel framing systems for interior gypsum board assemblies.
2. Suspension systems for interior gypsum ceilings and soffits.

1.2 ACTION SUBMITTALS

A. Product Data: For each type of product.

PART 2 - PRODUCTS

2.1 PERFORMANCE REQUIREMENTS

A. Fire-Test-Response Characteristics: Provide materials and construction identical to those tested according to ASTM E 119.

B. STC-Rated Assemblies: Provide materials and construction identical to those tested in assembly indicated according to ASTM E 90 and classified according to ASTM E 413.

2.2 FRAMING SYSTEMS

A. Steel Studs and Runners: ASTM C 645. Use either steel studs and runners or dimpled steel studs and runners of equivalent minimum base-metal thickness.
1. Manufacturers:
   a. MRI Steel Framing, LLC.
2. Minimum Base-Metal Thickness: 20 ga.
3. Depth: As indicated on Drawings.

B. Slip-Type Head Joints: Where indicated, provide one of the following in thickness not less than indicated for studs and in width to accommodate depth of studs:
1. Single Long-Leg Runner System: ASTM C 645 top runner with 2-inch-deep flanges, installed with studs friction fit into top runner and with continuous bridging located within 12 inches of the top of studs to provide lateral bracing.
2. Double-Runner System: ASTM C 645 top runners, inside runner with 2-inch- deep flanges and fastened to studs, and outer runner sized to friction fit inside runner.
3. Deflection Track: Steel sheet top runner manufactured to prevent cracking of finishes due to deflection of structure above.
   a. Manufacturers:
      1) Dietrich Metal Framing; SLP-TRK Slotted Deflection Track.
      2) MBA Building Supplies; Slotted Deflecto Track.
      3) Steel Network Inc. (The); VertiTrack VTD Series.
      4) Superior Metal Trim; Superior Flex Track System (SFT).
      5) Telling Industries; Vertical Slip Track II.

C. Firestop Tracks: Manufactured to allow partition heads to expand and contract with movement of the structure while maintaining continuity of fire-resistance-rated assembly indicated; in thickness not less than indicated for studs and in width to accommodate depth of studs.
   1. Manufacturer:
      a. MRI Steel Framing, LLC.

D. Flat Strap and Backing Plate: Steel sheet for blocking and bracing in length and width indicated.
   1. Manufacturer:
      a. MRI Steel Framing, LLC.
   2. Minimum Base-Metal Thickness: 20 ga.

E. Cold-Rolled Channel Bridging: Steel, 0.053-inch minimum base-metal thickness, with minimum 1/2-inch- wide flanges.
   1. Manufacturer:
      a. MRI Steel Framing, LLC.
   2. Depth: 1-1/2 inches.
   3. Clip Angle: Not less than 1-1/2 by 1-1/2 inches, 0.068-inch-thick, galvanized steel.

F. Hat-Shaped, Rigid Furring Channels: ASTM C 645.
   1. Manufacturer:
      a. MRI Steel Framing, LLC.
   2. Minimum Base-Metal Thickness: 20 ga.
   3. Depth: 7/8 inch.

2.3 SUSPENSION SYSTEMS

A. Tie Wire: ASTM A 641/A 641M, Class 1 zinc coating, soft temper, 0.062-inch- diameter wire, or double strand of 0.048-inch- diameter wire.

B. Wire Hangers: ASTM A 641/A 641M, Class 1 zinc coating, soft temper, 0.16 inch in diameter.

C. Flat Hangers: Steel sheet, 1 by 3/16 inch by length indicated.

D. Carrying Channels: Cold-rolled, commercial-steel sheet with a base-metal thickness of 0.053 inch and minimum 1/2-inch- wide flanges.
   1. Depth: 1-1/2 inches.

E. Furring Channels (Furring Members):
   1. Cold-Rolled Channels: 0.053-inch uncoated-steel thickness, with minimum 1/2-inch- wide flanges, 3/4 inch deep.
   2. Hat-Shaped, Rigid Furring Channels: ASTM C 645, 7/8 inch deep.
      a. Minimum Base-Metal Thickness: 0.033 inch.

2.4 AUXILIARY MATERIALS

A. Fasteners for Metal Framing: Of type, material, size, corrosion resistance, holding power, and other properties required to fasten steel members to substrates.

B. Isolation Strip at Exterior Walls: Provide foam gasket.

PART 3 - EXECUTION

3.1 INSTALLATION, GENERAL

A. Installation Standard: ASTM C 754.
   1. Gypsum Plaster Assemblies: Also comply with requirements in ASTM C 841 that apply to framing installation.
   2. Portland Cement Plaster Assemblies: Also comply with requirements in ASTM C 1063 that apply to framing installation.
   3. Gypsum Veneer Plaster Assemblies: Also comply with requirements in ASTM C 844 that apply to framing installation.
   4. Gypsum Board Assemblies: Also comply with requirements in ASTM C 840 that apply to framing installation.

B. Install supplementary framing, and blocking to support fixtures, equipment services, heavy trim, grab bars, toilet accessories, furnishings, or similar construction.

C. Install bracing at terminations in assemblies.

D. Do not bridge building control and expansion joints with non-load-bearing steel framing members. Frame both sides of joints independently.

3.2 INSTALLING FRAMED ASSEMBLIES

A. Install framing system components according to spacings indicated, but not greater than spacings required by referenced installation standards for assembly types.

B. Where studs are installed directly against exterior masonry walls or dissimilar metals at exterior walls, install isolation strip between studs and exterior wall.

C. Install studs so flanges within framing system point in same direction.

D. Install tracks (runners) at floors and overhead supports. Extend framing full height to structural supports or substrates above suspended ceilings, except where partitions are indicated to terminate at suspended ceilings. Continue framing around ducts penetrating partitions above ceiling.
   1. Slip-Type Head Joints: Where framing extends to overhead structural supports, install to produce joints at tops of framing systems that prevent axial loading of finished assemblies.
   2. Door Openings: Screw vertical studs at jambs to jamb anchor clips on door frames; install runner track section (for cripple studs) at head and secure to jamb studs.
      a. Install two studs at each jamb unless otherwise indicated.
      b. Install cripple studs at head adjacent to each jamb stud, with a minimum 1/2-inch clearance from jamb stud to allow for installation of control joint in finished assembly.
      c. Extend jamb studs through suspended ceilings and attach to underside of overhead structure.

3. Other Framed Openings: Frame openings other than door openings the same as required for door openings unless otherwise indicated. Install framing below sills of openings to match framing required above door heads.
4. Fire-Resistance-Rated Partitions: Install framing to comply with fire-resistance-rated assembly indicated and support closures and to make partitions continuous from floor to underside of solid structure.
   a. Firestop Track: Where indicated, install to maintain continuity of fire-resistance-rated assembly indicated.

E. Direct Furring:
1. Screw to wood framing.
2. Attach to concrete or masonry with stub nails, screws designed for masonry attachment, or powder-driven fasteners spaced 24 inches o.c.

F. Installation Tolerance: Install each framing member so fastening surfaces vary not more than 1/8 inch from the plane formed by faces of adjacent framing.

3.3 INSTALLING SUSPENSION SYSTEMS

A. Install suspension system components according to spacings indicated, but not greater than spacings required by referenced installation standards for assembly types.

B. Isolate suspension systems from building structure where they abut or are penetrated by building structure to prevent transfer of loading imposed by structural movement.

C. Suspend hangers from building structure as follows:
1. Install hangers plumb and free from contact with insulation or other objects within ceiling plenum that are not part of supporting structural or suspension system.
   a. Splay hangers only where required to miss obstructions and offset resulting horizontal forces by bracing, countersplaying, or other equally effective means.
2. Where width of ducts and other construction within ceiling plenum produces hanger spacings that interfere with locations of hangers, install supplemental suspension members and hangers in the form of trapezes or equivalent devices.
3. Do not attach hangers to steel roof deck.
4. Do not attach hangers to permanent metal forms. Furnish cast-in-place hanger inserts that extend through forms.
5. Do not attach hangers to rolled-in hanger tabs of composite steel floor deck.
6. Do not connect or suspend steel framing from ducts, pipes, or conduit.

D. Fire-Resistance-Rated Assemblies: Wire tie furring channels to supports.

E. Seismic Bracing: Sway-brace suspension systems with hangers used for support.

F. Installation Tolerances: Install suspension systems that are level to within 1/8 inch in 12 feet measured lengthwise on each member that will receive finishes and transversely between parallel members that will receive finishes.

END OF SECTION 092216

SECTION 092300 - GYPSUM PLASTERING

PART 1 - GENERAL

1.1 SUMMARY

A. Section Includes:
   1. Gypsum plastering on expanded-metal lath.
   2. Gypsum plastering on monolithic concrete.

1.2 ACTION SUBMITTALS

A. Product Data: For each type of product.

PART 2 - PRODUCTS

2.1 PERFORMANCE REQUIREMENTS

A. Fire-Resistance Ratings: Where indicated, provide gypsum plaster assemblies identical to those of assemblies tested for fire resistance according to ASTM E 119 by a qualified testing agency.

2.2 EXPANDED-METAL LATH

A. Expanded-Metal Lath: ASTM C 847, cold-rolled carbon-steel sheet with ASTM A 653/A 653M, G60, hot-dip galvanized-zinc coating.
   1. Manufacturers:
      a. Alabama Metal Industries Company; a Gibraitar Industries Co.
      b. CEMCO; California Expanded Metal Products.
      c. ClarkDietrich Building Systems.
      d. Philips Manufacturing Co.
   2. Diamond-Mesh Lath:
      a. Type: Flat.
      b. Weight: 2.5 lb/sq. yd.

2.3 ACCESSORIES

A. General: Comply with ASTM C 841, and coordinate depth of trim and accessories with thicknesses and number of plaster coats required.

B. Metal Accessories:
   1. Manufacturers:
      a. Alabama Metal Industries Company; a Gibraitar Industries Co.
      b. CEMCO; California Expanded Metal Products.
      c. ClarkDietrich Building Systems.
      d. Marino\WARE.
      e. Philips Manufacturing Co.
   2. Cornerite: Fabricated from expanded-metal lath with ASTM A 653/A 653M, G60, hot-dip galvanized-zinc coating.
   3. Striplath: Fabricated from expanded-metal lath with ASTM A 653/A 653M, G60, hot-dip galvanized-zinc coating.
   4. Cornerbeads: Fabricated from zinc or zinc-coated (galvanized) steel.
      a. Smallnose cornerbead with expanded flanges; use unless otherwise indicated.

b. Smallnose cornerbead with perforated flanges; use on curved corners.
c. Smallnose cornerbead with expanded flanges reinforced by perforated stiffening rib; use on columns and for finishing unit masonry corners.
d. Bullnose cornerbead, radius 3/4-inch minimum, with expanded flanges; use at locations indicated on Drawings.

5. Casing Beads: Fabricated from zinc or zinc-coated (galvanized) steel; square-edged style; with expanded flanges.
6. Control Joints: Fabricated from zinc or zinc-coated (galvanized) steel; one-piece-type, folded pair of unperforated screeds in M-shaped configuration; with perforated flanges and removable protective tape on plaster face of control joint.
7. Expansion Joints: Fabricated from zinc or zinc-coated (galvanized) steel; folded pair of unperforated screeds in M-shaped configuration; with expanded flanges.
8. Two-Piece Expansion Joints: Fabricated from zinc or zinc-coated (galvanized) steel; formed to produce slip-joint and square-edged reveal that is adjustable from 1/4 to 5/8 inch wide; with perforated flanges.

2.4 MISCELLANEOUS MATERIALS

A. Water for Mixing and Finishing Plaster: Potable and free of substances capable of affecting plaster set or of damaging plaster, lath, or accessories.

B. Bonding Compound: ASTM C 631.

C. Fasteners for Attaching Metal Lath to Substrates: ASTM C 841.

D. Wire: ASTM A 641/A 641M, Class 1 zinc coating, soft temper, not less than 0.0475-inch diameter unless otherwise indicated.

E. Mix Additives: Use gypsum plaster accelerators and retarders from plaster manufacturer if required by Project conditions. Use only additives that manufacturer recommends in writing for use with plaster to which it is added.

2.5 BASE-COAT PLASTER MATERIALS

A. Lightweight-Gypsum Ready-Mixed Plaster: ASTM C 28/C 28M, with mill-mixed perlite aggregate.
1. Manufacturers:
a. National Gypsum Company.
b. United States Gypsum Co.

B. Gypsum Neat Plaster: ASTM C 28/C 28M, for use with job-mixed aggregates.
1. Manufacturers:
a. CertainTeed Corporation.
b. National Gypsum Company.
c. United States Gypsum Co.

C. Aggregates for Base-Coat Plasters: ASTM C 35, sand and perlite.

2.6 FINISH-COAT PLASTER MATERIALS

A. Gypsum Gaging Plaster: ASTM C 28/C 28M.
1. Manufacturers:
a. National Gypsum Company.
b. United States Gypsum Co.

B. Gypsum Ready-Mixed Finish Plaster: Manufacturer's standard, mill-mixed, gaged, interior finish.
1. Manufacturers:
a. National Gypsum Company.
b. United States Gypsum Co.

C. Lime: ASTM C 206, Type N, normal finishing hydrated lime.
1. United States Gypsum Company.

D. Aggregates for Float Finishes: ASTM C 35, sand, perlite; graded according to ASTM C 842.

2.7 PLASTER MIXES

A. Mixing: Comply with ASTM C 842 and manufacturer's written instructions for applications indicated.

B. Mix Additives: Use accelerators and retarders, if required by Project conditions, according to manufacturer's writte instructions.

PART 3 - EXECUTION

3.1 INSTALLATION, GENERAL

A. Fire-Resistance-Rated Assemblies: Install components according to requirements for design designations from listing organization and publication indicated on Drawings.

B. Acoustical Sealant: Where required, seal joints between edges of plasterwork and abutting construction with acoustical sealant.

3.2 INSTALLING EXPANDED-METAL LATH

A. Expanded-Metal Lath: Install according to ASTM C 841.

3.3 INSTALLING ACCESSORIES

A. General: Install according to ASTM C 841.

B. Cornerbeads: Install at external corners.

C. Casing Beads: Install at terminations of plasterwork, except where plaster passes behind and is concealed by other work and where metal screeds, bases, or frames act as casing beads.

D. Control Joints: Locate as indicated on Drawings.

3.4 PLASTER APPLICATION

A. General: Comply with ASTM C 842.

B. Bonding Compound: Apply on unit masonry substrates for direct application of plaster.

C. Base-Coat Plaster:
   1. Over Expanded-Metal Lath:
      a. Scratch Coat: Gypsum neat plaster with job-mixed sand.
      b. Brown Coat: Lightweight-gypsum ready-mixed plaster.
   2. Over Unit Masonry: Lightweight-gypsum ready-mixed plaster.

D. Finish Coats:
   1. Smooth-Troweled Finishes: Gypsum ready-mixed finish plaster.
   2. Float Finishes: Gypsum gaging plaster and lime putty.

E. Concealed Plaster:
   1. Where plaster application is concealed behind built-in cabinets, similar furnishings, and equipment, apply finish coat.
   2. Where plaster application is concealed above suspended ceilings and in similar locations, omit finish coat.
   3. Where plaster application is used as a base for adhesive application of tile and similar finishes, omit finish coat.

3.5 PLASTER REPAIRS

A. Repair or replace work to eliminate cracks, dents, blisters, buckles, crazing and check cracking, dry outs, efflorescence, sweat outs, and similar defects and where bond to substrate has failed.

END OF SECTION 092300

SECTION 092900 - GYPSUM BOARD

PART 1 - GENERAL

1.1 SUMMARY

A. Section Includes:
   1. Interior gypsum board.
   2. Tile backing panels.

1.2 ACTION SUBMITTALS

A. Product Data: For each type of product.

PART 2 - PRODUCTS

2.1 PERFORMANCE REQUIREMENTS

A. Fire-Resistance-Rated Assemblies: For fire-resistance-rated assemblies, provide materials and construction identical to those tested in assembly indicated according to ASTM E 119 by an independent testing agency.

2.2 INTERIOR GYPSUM BOARD

A. Manufacturers:
   1. American Gypsum.
   2. CertainTeed Corp.
   3. Georgia-Pacific Gypsum LLC.
   4. National Gypsum Company.
   5. Temple-Inland Building Products by Georgia-Pacific.
   6. United States Gypsum Corporation.

B. Gypsum Board, Type X: ASTM C 1396/C 1396M.
   1. Thickness: 5/8 inch.
   2. Long Edges: Tapered.

C. Gypsum Ceiling Board: ASTM C 1396/C 1396M.
   1. Thickness: 1/2 inch.
   2. Long Edges: Tapered.

D. Abuse-Resistant Gypsum Board: ASTM C 1629/C 1629M, Level 2.
   1. Core: 5/8 inch, Type X.
   2. Long Edges: Tapered.
   3. Mold Resistance: ASTM D 3273, score of 10 as rated according to ASTM D 3274.

E. Moisture- and Mold-Resistant Gypsum Board: ASTM C 1396/C 1396M. With moisture- and mold-resistant core and paper surfaces.
   1. Core: 5/8 inch, Type X.
   2. Long Edges: Tapered.
   3. Mold Resistance: ASTM D 3273, score of 10 as rated according to ASTM D 3274.

2.3 TILE BACKING PANELS

A. Glass-Mat, Water-Resistant Backing Board: ASTM C 1178/C 1178M, with manufacturer's standard edges.
   1. Manufacturers:
      a. CertainTeed Corp.
      b. Georgia-Pacific Gypsum LLC.
      c. National Gypsum Company.
      d. Temple-Inland Building Products by Georgia-Pacific.
   2. Core: 5/8 inch, Type X.
   3. Mold Resistance: ASTM D 3273, score of 10 as rated according to ASTM D 3274.

2.4 TRIM ACCESSORIES

A. Interior Trim: ASTM C 1047.
   1. Material: Galvanized or aluminum-coated steel sheet or rolled zinc.

2.5 JOINT TREATMENT MATERIALS

A. General: Comply with ASTM C 475/C 475M.

B. Joint Tape:
   1. Interior Gypsum Board: Paper.
   2. Glass-Mat Gypsum Sheathing Board: 10-by-10 glass mesh.
   3. Tile Backing Panels: As recommended by panel manufacturer.

C. Joint Compound for Interior Gypsum Board: For each coat use formulation that is compatible with other compounds applied on previous or for successive coats.

2.6 AUXILIARY MATERIALS

A. Steel Drill Screws: ASTM C 1002, unless otherwise indicated.

B. Sound Attenuation Blankets: ASTM C 665, Type I (blankets without membrane facing).

C. Acoustical Joint Sealant: ASTM C 834. Product effectively reduces airborne sound transmission through perimeter joints and openings as demonstrated by testing according to ASTM E 90.
   1. Manufacturers:
      a. Accumetric LLC.
      b. Grabber Construction Products.
      c. Pecora Corporation.
      d. Specified Technologies Inc.
      e. United States Gypsum Company.
   2. Acoustical joint sealant shall have a VOC content of 250 g/L or less when calculated according to 40 CFR 59, Subpart D (EPA Method 24).

D. Thermal Insulation: As specified in Section 072100 "Thermal Insulation."

E. Vapor Retarder: As specified in Section 072600 "Vapor Retarders."

PART 3 - EXECUTION

3.1 APPLYING AND FINISHING PANELS

A. Comply with ASTM C 840.

B. Examine panels before installation. Reject panels that are wet, moisture damaged, and mold damaged.

C. Isolate perimeter of gypsum board applied to non-load-bearing partitions at structural abutments, except floors. Provide 1/4- to 1/2-inch- wide spaces at these locations and trim edges with edge trim where edges of panels are exposed. Seal joints between edges and abutting structural surfaces with acoustical sealant.

D. Install trim with back flanges intended for fasteners, attach to framing with same fasteners used for panels. Otherwise, attach trim according to manufacturer's written instructions.
   1. Control Joints: Install control joints according to ASTM C 840 and in specific locations approved by Architect for visual effect.

E. Prefill open joints, rounded or beveled edges, and damaged surface areas.

F. Apply joint tape over gypsum board joints, except for trim products specifically indicated as not intended to receive tape.

G. Gypsum Board Finish Levels: Finish panels to levels indicated below and according to ASTM C 840:
   1. Level 1: Ceiling plenum areas, concealed areas, and where indicated.
   2. Level 2: Panels that are substrate for tile.
   3. Level 4: At panel surfaces that will be exposed to view unless otherwise indicated.
      a. Primer and its application to surfaces are specified in Section 099123 "Interior Painting."

H. Protect adjacent surfaces from drywall compound and texture finishes and promptly remove from floors and other non-drywall surfaces. Repair surfaces stained, marred, or otherwise damaged during drywall application.

I. Remove and replace panels that are wet, moisture damaged, and mold damaged.

END OF SECTION 092900

SECTION 093013 - CERAMIC TILING

PART 1 - GENERAL

1.1 SUMMARY

A. Section Includes:
1. Porcelain tile; floor and cove base.
2. Ceramic tile; wall, trim and wainscot cap.
3. Waterproof membrane for thinset applications.
4. Crack isolation membrane.
5. Metal edge strips.

B. Related Requirements:
1. Section 092900 “Gypsum Board” for water-resistant tile backer board.

1.2 DEFINITIONS

A. General: Definitions in the ANSI A108 series of tile installation standards and in ANSI A137.1 apply to Work of this Section unless otherwise specified.

B. ANSI A108 Series: ANSI A108.01, ANSI A108.02, ANSI A108.1A, ANSI A108.1B, ANSI A108.1C, ANSI A108.4, ANSI A108.5, ANSI A108.6, ANSI A108.8, ANSI A108.9, ANSI A108.10, ANSI A108.11, ANSI A108.12, ANSI A108.13, ANSI A108.14, ANSI A108.15, ANSI A108.16, and ANSI A108.17, which are contained in its “Specifications for Installation of Ceramic Tile”.

C. Module Size: Actual tile size plus joint width indicated.

D. Face Size: Actual tile size, excluding spacer lugs.

1.3 ACTION SUBMITTALS

A. Product Data: For each type of product.

B. Shop Drawings: Show locations of each type of tile and tile pattern. Show widths, details, and locations of expansion, contraction, control, and isolation joints in tile substrates and finished tile surfaces.

C. Samples:
1. Full-size units of each type and composition of tile and for each color and finish required.
2. Full-size units of each type of trim and accessory for each color and finish required.
3. Metal edge strips in 6” lengths.

1.4 INFORMATIONAL SUBMITTALS

A. Qualification Data: For Installer.

1.5 MAINTENANCE MATERIAL SUBMITTALS

A. Furnish extra materials that match and are from same production runs as products installed and that are packaged with protective covering for storage and identified with labels describing contents.
   1. Tile and Trim Units: Furnish quantity of full-size units equal to 3 percent of amount installed for each type, composition, color, pattern, and size indicated.

1.6 QUALITY ASSURANCE

A. Installer Qualifications:
   1. Installer is a five-star member of the National Tile Contractors Association or a Trowel of Excellence member of the Tile Contractors' Association of America.
   2. Installer's supervisor for Project holds the International Masonry Institute's Foreman Certification.
   3. Installer employs Ceramic Tile Education Foundation Certified Installers or installers recognized by the U.S. Department of Labor as Journeyman Tile Layers.

1.7 DELIVERY, STORAGE, AND HANDLING

A. Deliver and store packaged materials in original containers with seals unbroken and labels intact until time of use. Comply with requirements in ANSI A137.1 for labeling tile packages.

B. Store tile and cementations materials on elevated platforms, under cover, and in a dry location.

C. Store aggregates where grading and other required characteristics can be maintained and contamination can be avoided.

D. Store liquid materials in unopened containers and protected from freezing.

1.8 FIELD CONDITIONS

A. Environmental Limitations: Do not install tile until construction in spaces is complete and ambient temperature and humidity conditions are maintained at the levels indicated in referenced standards and manufacturer’s written instructions.

PART 2 - PRODUCTS

2.1 MANUFACTURES

A. Source Limitations for Tile: Obtain tile of each type and color or finish from single source or producer.
   1. Obtain tile of each type and color or finish from same production run and of consistent quality in appearance and physical properties for each contiguous area.

B. Source Limitations for Setting and Grouting Materials: Obtain ingredients of a uniform quality for each mortar, adhesive, and grout

component from single manufacturer and each aggregate from single source or producer.
1. Obtain setting and grouting materials, except for unmodified Portland cement and aggregate, from single manufacturer.

C. Source Limitations for Other Products: Obtain each of the following products specified in this Section from a single manufacturer:
1. Metal edge strips.

2.2 PRODUCTS, GENERAL

A. ANSI Ceramic Tile Standard: Provide Standard-grade tile that complies with ANSI A137.1 for types, compositions, and other characteristics indicated.

B. ANSI Standards for Tile Installation Materials: Provide materials complying with ANSI A108.02, ANSI standards referenced in other Part 2 articles, ANSI standards referenced by TCNA installation methods specified in tile installation schedules, and other requirements specified.

C. Factory Blending: For tile exhibiting color variations within ranges, blend tile in factory and package so tile units taken from one package show same range in colors are those taken from other packages and match approved samples.

2.3 TILE PRODUCTS

A. Porcelain Tile Type (P.T.): Unglazed floor tile and cove base.
1. Basis-of-Design Product: Subject to compliance with requirements, provide Dal-Tile Corporation, Unity ColorBody Porcelain, Coffee P404 or comparable color body porcelain tile product by one of the following:
a. American Olean; a division of Dal-Tile Corporation.
b. Crossville, Inc.
c. Dal-Tile Corporation.
d. Florida Tile, Inc.

Certification: Tile certified by the Porcelain Tile Certification Agency.
3. Face Size: 12 by 24 inches.
4. Face Size Variation: Rectified.
5. Thickness: 3/8 inch.
6. Face: Plain with square edges.
7. Dynamic Coefficient of Friction: Not less than 0.42.
8. Tile Color, Glaze, and Pattern: As selected by Architect from manufacturer's full range.
9. Grout Color: As selected by Architect from manufacturer's full range.
10. Grout Joint Recommendation: 1/8 inch.
11. Installation Method: 1/2 offset.
12. Trim Units: Coordinated with sizes and coursing of adjoining flat tile where applicable and matching characteristics of adjoining flat tile. Provide shapes as follows, selected from manufacturer's standard shapes:
a. Base: Coved, module size 6 x 12 inches.

b. External Corners: Surface bullnose, module size same as adjoining flat tile.
c. Internal Corners: Field-butted square corners. For coved base, use angle pieces designed to fit with stretcher shapes.

B. Ceramic Tile Type (C.T.): Glazed wall tile, trim and wainscot cap.
1. Basis of Design Product: Subject to compliance with requirements, provide Dal-Tile Corporation, Glazed Wall Tile, Semi-Gloss Almond 0135 or comparable glazed wall tile product by one of the following:
a. American Olean; a division of Dal-Tile Corporation.
b. Crossville, Inc.
c. Daltile.
d. Florida Tile, Inc.
2. Module Size: 3 by 6 inches.
3. Face Size Variation: Rectified.
4. Thickness: 5/16 inch.
5. Finish: glaze.
6. Tile Color and Pattern: As selected by Architect from manufacturer's full range.
7. Grout Color: As selected by Architect from manufacturer's full range.
8. Grout Joint Recommendation: 1/16 inch.
9. Installation Method: 1/2 offset.
10. Trim Units: Coordinated with sizes and coursing of adjoining flat tile where applicable and matching characteristics of adjoining flat tile. Provide shapes as follows, selected from manufacturer's standard shapes:
a. Wainscot Cap: Surface bullnose, module size 6 by 2 inches.
b. External Corners: Surface bullnose, same size as adjoining flat tile.
c. Internal Corners: Field-butted square corners. For cap use angle pieces designed to fit with stretcher shapes.

2.4 WATERPROOF MEMBRANE

A. General: Manufacturer's standard product that complies with ANSI A118.10 and is recommended by the manufacturer for the application indicated. Include reinforcement and accessories recommended by manufacturer.

B. Fabric-Reinforced, Fluid-Applied Membrane: System consisting of liquid-latex rubber or elastomeric polymer and continuous fabric reinforcement.
1. Bostik, Inc.
2. Laticrete International, Inc.
3. Mapei Corporation.

C. Fluid-Applied Membrane: Liquid-latex rubber or elastomeric polymer.
1. ARDEX GmbH.
2. Bostik, Inc.
3. Laticrete International, Inc.
4. Mapei Corporation.

D. Waterproofing and Tile-Setting Adhesive: One-part, fluid-applied product with a VOC content of 65 g/L or less intended for use as both waterproofing and tile-setting adhesive in a two-step process.
   1. Boiardi Products Corporation; a QEP Company.
   2. Bostik, Inc.

2.5 CRACK ISOLATION MEMBRANE

A. General: Manufacturer's standard product, selected from the following, that complies with ANSI A118.12 for standard performance and is recommended by the manufacturer for the application indicated. Include reinforcement and accessories recommended by manufacturer.

B. Fabric-Reinforced, Fluid-Applied Membrane: System consisting of liquid-latex rubber or elastomeric polymer and fabric reinforcement.
   1. Bostik, Inc.
   2. Laticrete International, Inc.
   3. Mapei Corporation.

C. Fluid-Applied Membrane: Liquid-latex rubber or elastomeric polymer.
   1. Bostik, Inc.
   2. Laticrete International, Inc.
   3. Mapei Corporation.

D. Crack Isolation Membrane and Tile-Setting Adhesive: One-part, fluid-applied product with a VOC content of 65 g/L or less intended for use as both a crack isolation membrane and tile-setting adhesive in a two-step process.
   1. Boiardi Products Corporation; a QEP Company.
   2. Bostik, Inc.

2.6 SETTING MATERIALS

A. Latex-Portland Cement Mortar (Thiset): ASNI A118.4 (Medium bed)
   1. Basis-of-Design Product: Subject to compliance with requirements, provide Wall-Mapei Corp.; “UltraFlex LFT” Premium Large Format Tile Mortar with Polymer. Floor-Mapei Corp.; “Ultracontact” Premium Full-Contact Tile Mortar with Polymer of comparable product by one of the following:
      a. Bostik, Inc.
      b. C-Cure.
      c. Custom Building Products.
      d. Laticrete International, Inc.
      e. TEC, H.B. Fuller Construction Product Inc.

2.7 GROUT MATERIALS

A. High-Performance Tile Grout: ANSI A118.7.
   1. Basis-of-Design Product: Subject to compliance with requirements, provide Mapei Corp.; “Ultra Color Plus” Premium Rapid-Setting Grout with Polymer or comparable product by one of the following:
      a. Bostik, Inc.
      b. C-Cure.
      c. Custom Building Products.
      d. Laticrete International, Inc.

e. TEC, H.B. Fuller Construction Products, Inc.
2. Colors: To be selected.

2.8 MISCELLANEOUS MATERIALS

A. Trowelable Underlayments and Patching Compounds: Latex-modified, portland cement-based formulation provided or approved by manufacturer of tile-setting materials for installations indicated.

B. Metal Edge Strips: Angle or L-shape, height to match tile and setting-bed thickness, metallic or combination of metal and PVC or neoprene base, designed specifically for flooring applications; stainless-steel, ASTM A 666, 300 Series exposed-edge material.
1. Basis-of-Design Product: Subject to compliance with requirements, provide Schluter Systems LP; edge proctection and transition profiles for floors. Submit profile to best fit project conditions or comparable product by one of the following:
a. Blanke Corporation.
b. Ceramic Tool Company, Inc.

2.9 MIXING MORTARS AND GROUT

A. Mix mortars and grouts to comply with referenced standards and mortar and grout manufacturer’s written instructions.

B. Add materials, water, and additives in accurate proportions.

C. Obtain and use type of mixing equipment, mixer speeds, mixing containers, mixing time, and other procedures to produce mortars and grouts of uniform quality with optimum performance characteristics for installations indicated.

PART 3 - EXECUTION

3.1 EXAMINATION

A. Examine substrates, areas, and conditions where tile will be installed, with Installer present, for compliance with requirements for installation tolerances and other conditions affecting performance of the Work.
1. Verify that substrates for setting tile are firm; dry; clean; free of coatings that are incompatible with tile-setting materials, including curing compounds and other substances that contain soap, wax, oil, or silicone; and comply with flatness tolerances required by ANSI A108.01 for installations indicated.
2. Verify that concrete substrates for tile floors installed with thinset mortar comply with surface finish requirements in ANSI A108.01 for installations indicated.
a. Verify that surfaces that received a steel trowel finish have been mechanically scarified.
b. Verify that protrusions, bumps, and ridges have been removed by sanding or grinding.
3. Verify that installation of grounds, anchors, recessed frames, electrical and mechanical units or work, and similar items located in or behind tile has been completed.

4. Verify that joints and cracks in tile substrates are coordinated with the joint locations; if not coordinated, adjust joint locations in consultation with Architect.

B. Proceed with installation only after unsatisfactory conditions have been corrected.

3.2 PREPARATION

A. Fill cracks, holes, and depressions in concrete substrates for tile floors installed with thinset mortar with trowelable leveling and patching compound specifically recommended by tile-setting material manufacturer.

B. Where indicated, prepare substrates to receive waterproofing by applying a reinforced mortar bed that complies with ANSI A108.1A and is sloped 1/4 inch per foot toward drains.

C. Blending: For tile exhibiting color variations, verify that tile has been factory blended and packaged so tile units taken from one package show same range of colors as those taken from other packages and match approved Samples. If not factory blended, either return to manufacturer or blend tiles at Project site before installing.

3.3 CERAMIC TILE INSTALLATION

A. Comply with TCNA's "Handbook for Ceramic, Glass, and Stone Tile Installation" for TCNA installation methods specified in tile installation schedules. Comply with parts of the ANSI A108 series "Specifications for Installation of Ceramic Tile" that are referenced in TCNA installation methods, specified in tile installation schedules, and apply to types of setting and grouting materials used.
   1. For the following installations, follow procedures in the ANSI A108 series of tile installation standards for providing 95 percent mortar coverage:
      a. Tile floors in wet areas.
      b. Tile floors consisting of tiles 8 by 8 inches or larger.

B. Extend tile work into recesses and under or behind equipment and fixtures to form complete covering without interruptions unless otherwise indicated. Terminate work neatly at obstructions, edges, and corners without disrupting pattern or joint alignments.

C. Accurately form intersections and returns. Perform cutting and drilling of tile without marring visible surfaces. Carefully grind cut edges of tile abutting trim, finish, or built-in items for straight aligned joints. Fit tile closely to electrical outlets, piping, fixtures, and other penetrations so plates, collars, or covers overlap tile.

D. Provide manufacturer's standard trim shapes where necessary to eliminate exposed tile edges.

E. Jointing Pattern: Lay tile in grid pattern unless otherwise indicated. Lay out tile work and center tile fields in both directions in each space or on each wall area. Lay out tile work to minimize the use of

pieces that are less than half of a tile. Provide uniform joint widths unless otherwise indicated.
1. Where adjoining tiles on floor, base, walls, or trim are specified or indicated to be same size, align joints.
2. Where tiles are specified or indicated to be whole integer multiples of adjoining tiles on floor, base, walls, or trim, align joints unless otherwise indicated.

F. Joint Widths: Unless otherwise indicated, install tile with the following joint widths:
1. Glazed Wall Tile: 1/16 inch.
2. Porcelain Tile: 1/8 inch.

G. Lay out tile wainscots to dimensions indicated or to next full tile beyond dimensions indicated.

H. Expansion Joints: Provide expansion joints and other sealant-filled joints, including control, contraction, and isolation joints, where indicated. Form joints during installation of setting materials, mortar beds, and tile. Do not saw-cut joints after installing tiles.
1. Where joints occur in concrete substrates, locate joints in tile surfaces directly above them.

I. Metal Edge Strips: Install where exposed edge of tile flooring meets carpet, wood, or other flooring that finishes flush with or below top of tile and no threshold is indicated.

J. Install panels and treat joints according to ANSI A108.11 and manufacturer's written instructions for type of application indicated. Use latex-portland cement mortar for bonding material unless otherwise directed in manufacturer's written instructions.

K. Install waterproofing to comply with ANSI A108.13 and manufacturer's written instructions to produce waterproof membrane of uniform thickness that is bonded securely to substrate.

L. Install crack isolation membrane to comply with ANSI A108.17 and manufacturer's written instructions to produce membrane of uniform thickness that is bonded securely to substrate.

3.4 ADJUSTING AND CLEANING

A. Remove and replace tile that is damaged or that does not match adjoining tile. Provide new matching units, installed as specified and in a manner to eliminate evidence of replacement.

B. Cleaning: On completion of placement and grouting, clean all ceramic tile surfaces so they are free of foreign matter.
1. Remove grout residue from tile as soon as possible.
2. Clean grout smears and haze from tile according to tile and grout manufacturer’s written instructions but no sooner the ten days after installation. Use only cleaners recommended by tile and grout manufacturers and only after determining that cleaners area safe to use by testing on samples of tile and other surfaces to be cleaned. Protect metal surfaces and plumbing fixtures from

effects of cleaning. Flush surfaces with clean water before and after cleaning.

3.5 PROTECTION

A. Protect installed tile work with kraft paper or other heavy covering during construction period to prevent staining, damage, and wear. If recommended by tile manufacturer, apply coat of neutral protective cleaner to completed tile walls and floors.

B. Prohibit foot and wheel traffic from tiled floors for at least seven days after grouting is completed.

C. Before final inspection, remove protective coverings and rinse neutral protective cleaner from tile surfaces.

3.6 INTERIOR CERAMIC TILE INSTALLATION SCHEDULE

A. Interior Floor Installations, Concrete Subfloor:
1. Ceramic Tile Installation: TCNA F125A; thinset mortar on crack isolation membrane.
a. Ceramic Tile Type: Porcelain, P.T.
b. Thinset Mortar: Latex-portland cement mortar. (medium bed)
c. Grout: High-performance sanded grout.

B. Interior Floor Installations, Wood Subfloor:
1. Ceramic Tile Installation: TCNA F144; thinset mortar on waterproof membrane over cementitious backer units or fiber-cement backer board.
a. Ceramic Tile Type: Porcelain, P.T.
b. Thinset Mortar: Latex- portland cement mortar. (medium bed)
c. Grout: High-performance sanded grout.

C. Interior Wall Installations, Wood or Metal Studs or Furring:
1. Ceramic Tile Installation: TCNA W244C or TCNA W244F; thinset mortar on cementitious backer units or fiber-cement backer board.
a. Ceramic Tile Type: Ceramic, C.T.
b. Thinset Mortar: Latex- portland cement mortar.
c. Grout: High-performance unsanded grout.

END OF SECTION 093013

SECTION 095113 - ACOUSTICAL PANEL CEILINGS

PART 1 - GENERAL

1.1 SUMMARY

A. Section includes acoustical panels and exposed suspension systems for ceilings.

1.2 ACTION SUBMITTALS

A. Product Data: For each type of product.

B. Samples: For each exposed product and for each color and texture specified.

1.3 INFORMATIONAL SUBMITTALS

A. Product test reports.

B. Evaluation reports.

1.4 CLOSEOUT SUBMITTALS

A. Maintenance data.

PART 2 - PRODUCTS

2.1 PERFORMANCE REQUIREMENTS

A. Seismic Performance: Acoustical ceiling shall withstand the effects of earthquake motions determined according to ASCE/SEI 7.

B. Surface-Burning Characteristics: Comply with ASTM E 84; testing by a qualified testing agency. Identify products with appropriate markings of applicable testing agency.
   1. Flame-Spread Index: Comply with ASTM E 1264 for Class A materials.
   2. Smoke-Developed Index: 50 or less.

2.2 ACOUSTICAL PANEL CEILINGS, GENERAL

A. Glass-Fiber-Based Panels: Made with binder containing no urea formaldehyde.

B. Acoustical Panel Standard: Comply with ASTM E 1264.

C. Metal Suspension System Standard: Comply with ASTM C 635.

D. Attachment Devices: Size for five times the design load indicated in ASTM C 635, Table 1, "Direct Hung," unless otherwise indicated. Comply with seismic design requirements.

2.3 ACOUSTICAL PANELS

A. Manufacturer:
1. Armstrong World Industries Inc.
2. CertainTeed Corporation.
3. Chicago Metallic Corporation.
4. Golterman & Sabo.
5. Tectum Inc.
6. United States Gypsums Company.

B. Classification: Mineral fiber, fine texture.

C. Color: White.

D. LR: 0.86.

E. NRC: 0.70, Type E-400 mounting according to ASTM E 795.

F. CAC: 35.

G. Edge/Joint Detail: Angled tegular.

H. Thickness: 7/8 inch.

I. Modular Size: 24 by 24 inches.

2.4 METAL SUSPENSION SYSTEM

A. Manufacturer:
1. Armstrong World Industries Inc.
2. CertainTeed Corporation.
3. Chicago Metallic Corporation.
4. United States Gypsums Company.

B. Narrow-Face, Capped, Double-Web, Steel Suspension System: Main and cross runners roll formed from cold-rolled steel sheet; prepainted, electrolytically zinc coated, or hot-dip galvanized according to ASTM A 653/A 653M, not less than G30 coating designation; with prefinished 9/16-inch- wide metal caps on flanges.
1. Structural Classification: Heavy-duty system.
2. End Condition of Cross Runners: Override (stepped) type.
3. Face Design: Flat, flush.
4. Cap Material: Steel cold-rolled sheet.
5. Cap Finish: Painted white.

C. Roll-Formed, Sheet-Metal Edge Moldings and Trim: Type and profile indicated or, if not indicated, manufacturer's standard moldings for edges and penetrations that comply with seismic design requirements; formed from sheet metal of same material, finish, and color as that used for exposed flanges of suspension-system runners.

PART 3 - EXECUTION

3.1 INSTALLATION

A. Install acoustical panel ceilings to comply with ASTM C 636/C 636M and seismic design requirements indicated, according to manufacturer's written instructions and CISCA's "Ceiling Systems Handbook."

B. Measure each ceiling area and establish layout of acoustical panels to balance border widths at opposite edges of each ceiling. Avoid using less-than-half-width panels at borders, and comply with layout shown on reflected ceiling plans.
   1. Arrange directionally patterned acoustical panels as indicated on reflected ceiling plans.

END OF SECTION 095113

SECTION 096513 - RESILIENT BASE AND ACCESSORIES

PART 1 - GENERAL

1.1 SUMMARY

A. Section Includes:
1. Resilient base.
2. Resilient stair accessories.
3. Resilient molding accessories.

1.2 ACTION SUBMITTALS

A. Product Data: For each type of product.

B. Samples: For each exposed product and for each color and texture specified, not less than 12 inches long.

PART 2 - PRODUCTS

2.1 PERFORMANCE REQUIREMENTS

A. FloorScore Compliance: Resilient base and stair accessories shall comply with requirements of FloorScore certification.

2.2 THERMOPLASTIC-RUBBER BASE (RB)

A. Basis of Design: The design is based on the following products:
1. Johnsonite Traditional Wall Base; 136 Beachy (RB-1)
2. Johnsonite Traditional Wall Base; 475 Marshland (RB-2)
3. Johnsonite Traditional Wall Base; 140 Carrot (RB-3)
4. Johnsonite Traditional Wall Base; 259 Terra Firma (RB-4)
5. Johnsonite Traditional Wall Base; 184 Daffydil (RB-5)
6. Johnsonite Traditional Wall Base 260 Deep Water (RB-6)
7. Johnsonite Perceptions Wall Base; 34 Almond (RB-7)
8. Johnsonite Traditional Wall Base; 471 Bok Choy (RB-8)
9. Johnsonite Traditional Wall Base; 273 Copper Penny (RB-9)
10. Johnsonite Traditional Wall Base; 58 Windsor Blue (RB-10)
11. Johnsonite Traditional Wall Base; 15 Cabernet (RB-11)
12. Johnsonite Traditional Wall Base; 460 Cotton (RB-12)
13. Johnsonite Traditional Wall Base; 134 Gold Rush (RB-13)

B. Products: Approved equal must be submitted in writing prior to bid. Subject to compliance with requirements, available manufacturers that may be incorporated into the work include, but are not limited to, the following:
1. Allstate Rubber Corp.
2. Armstrong World Industries Inc.
3. Burke Mercer Flooring Products; a division of Burke Industries, Inc.
4. Flexco.
5. Johnsonite; a Tarkett Company.
6. Mannington.
7. Nora Systems, Inc.
8. Roppe Corporation, USA.

9. VPI Corporation.

C. Product Standard: ASTM F 1861, Type TP (rubber, thermoplastic).
1. Group: I (solid, homogeneous).
2. Style and Location:
a. Style B, Cove:

D. Thickness: 0.125 inch.

E. Height: 4 inches.

F. Lengths: Cut lengths 48 inches long or coils in manufacturer's standard length.

G. Outside Corners: Job formed.

H. Inside Corners: Job formed.

I. Colors: As selected by Architect from full range of industry colors.

2.3 RUBBER STAIR ACCESSORIES

A. Basis-of-Design: The design is based on the following product:
1. Johnsonite; Rubber Stairwell System 260 Deep Water.

B. Products: Approved equal must be submitted in writing prior to bid. Subject to compliance with requirements, available manufactruer’s that may be incorporated into the Work include, but are not limited to, the following:
1. Allstate Rubber Corp.
2. Armstrong World Industries Inc.
3. Burke Mercer Flooring Products; a division of Burke Industries, Inc.
4. Flexco.
5. Johnsonite; a Tarkett Company.
6. Mannington.
7. Nora Systems, Inc.
8. Roppe Corporation, USA.
9. VPI Corporation.

C. Stair Treads: ASTM F 2169.

1. Type: TP (rubber, thermoplastic).
2. Class: 1 (smooth, flat).
3. Group: 1 (embedded abrasive strips), 2 (with contrasting color for the visually impaired).
4. Nosing Style: Square or Round.
5. Nosing Height: 1-1/2 inches.
6. Thickness: 1/4 inch and tapered to back edge.
7. Size: Lengths and depths to fit each stair tread in one piece.
8. Integral Risers: Smooth, flat; in height that fully covers substrate.

D. Separate Risers: Smooth, flat; in height that fully covers substrate; produced by same manufacturer as treads and recommended by manufacturer for installation with treads.

1. Style: Coved toe, 7 inches high by length matching treads.
2. Thickness: 0.125 inch.

E. Landing Tile: Matching treads; produced by same manufacturer as treads and recommended by manufacturer for installation with treads.

F. Colors and Patterns: As selected by Architect from full range of industry colors. Colors to be selected. Match color and manufacturer of adjacent rubber flooring.

2.4 RUBBER MOLDING ACCESSORY

A. Products:
1. Roppe Corporation, USA.
2. VPI Corporation.

B. Description: Rubber stair-tread nosing, carpet edge for glue-down applications, nosing for carpet, nosing for resilient flooring, reducer strip for resilient flooring, joiner for tile and carpet, transition strips.

C. Profile and Dimensions: As indicated.

D. Locations: Provide rubber molding accessories in areas indicated.

E. Colors and Patterns: As selected by Architect from full range of industry colors.

2.5 INSTALLATION MATERIALS

A. Trowelable Leveling and Patching Compounds: Latex-modified, portland cement based or blended hydraulic-cement-based formulation provided or approved by resilient-product manufacturer for applications indicated.

B. Adhesives: Water-resistant type recommended by resilient-product manufacturer for resilient products and substrate conditions indicated.

1. Adhesives shall have a VOC content of 50 g/L or less except that adhesive for rubber stair treads shall have a VOC content of 60 g/L or less.

C. Stair-Tread Nose Filler: Two-part epoxy compound recommended by resilient stair-tread manufacturer to fill nosing substrates that do not conform to tread contours.

PART 3 - EXECUTION

3.1 PREPARATION

A. Prepare substrates according to manufacturer's written instructions to ensure adhesion of resilient products.

B. Concrete Substrates for Resilient Stair Accessories: Prepare horizontal surfaces according to ASTM F 710.

1. Verify that substrates are dry and free of curing compounds, sealers, and hardeners.
2. Remove substrate coatings and other substances that are incompatible with adhesives and that contain soap, wax, oil, or silicone, using mechanical methods recommended by manufacturer. Do not use solvents.
3. Alkalinity and Adhesion Testing: Perform tests recommended by manufacturer. Proceed with installation only after substrate alkalinity falls within range on pH scale recommended by manufacturer in writing, but not less than 5 or more than 9 pH.
4. Moisture Testing: Proceed with installation only after substrates pass testing according to manufacturer's written recommendations, but not less stringent than the following:

    a. Perform anhydrous calcium chloride test according to ASTM F 1869. Proceed with installation only after substrates have maximum moisture-vapor-emission rate of 3 lb of water/1000 sq. ft. in 24 hours.
    b. Perform relative humidity test using in situ probes according to ASTM F 2170. Proceed with installation only after substrates have maximum 75 percent relative humidity level.

C. Fill cracks, holes, and depressions in substrates with trowelable leveling and patching compound; remove bumps and ridges to produce a uniform and smooth substrate.

D. Do not install resilient products until they are the same temperature as the space where they are to be installed.
1. Move resilient products and installation materials into spaces where they will be installed at least 48 hours in advance of installation.

E. Immediately before installation, sweep and vacuum clean substrates to be covered by resilient products.

3.2 RESILIENT BASE INSTALLATION

A. Comply with manufacturer's written instructions for installing resilient base.

B. Apply resilient base to walls, columns, pilasters, casework and cabinets in toe spaces, and other permanent fixtures in rooms and areas where base is required.

C. Install resilient base in lengths as long as practical without gaps at seams and with tops of adjacent pieces aligned.

D. Tightly adhere resilient base to substrate throughout length of each piece, with base in continuous contact with horizontal and vertical substrates.

E. Do not stretch resilient base during installation.

F. On masonry surfaces or other similar irregular substrates, fill voids along top edge of resilient base with manufacturer's recommended adhesive filler material.

G. Job-Formed Corners:

1. Outside Corners: Use straight pieces of maximum lengths possible and form with returns not less than 3 inches in length.

   a. Form without producing discoloration (whitening) at bends.

2. Inside Corners: Use straight pieces of maximum lengths possible and form with returns not less than 3 inches in length.

   a. Miter or cope corners to minimize open joints.

3.3 RESILIENT ACCESSORY INSTALLATION

A. Comply with manufacturer's written instructions for installing resilient accessories.

B. Resilient Stair Accessories:

1. Use stair-tread-nose filler to fill nosing substrates that do not conform to tread contours.
2. Tightly adhere to substrates throughout length of each piece.
3. For treads installed as separate, equal-length units, install to produce a flush joint between units.

C. Resilient Molding Accessories: Butt to adjacent materials and tightly adhere to substrates throughout length of each piece. Install reducer strips at edges of floor covering that would otherwise be exposed.

3.4 CLEANING AND PROTECTION

A. Comply with manufacturer's written instructions for cleaning and protecting resilient products.

B. Perform the following operations immediately after completing resilient-product installation:
1. Remove adhesive and other blemishes from exposed surfaces.
2. Sweep and vacuum horizontal surfaces thoroughly.
3. Damp-mop horizontal surfaces to remove marks and soil.

C. Protect resilient products from mars, marks, indentations, and other damage from construction operations and placement of equipment and fixtures during remainder of construction period.

D. Cover resilient products subject to wear and foot traffic until Substantial Completion.

END OF SECTION 096513

SECTION 096516 - RESILIENT SHEET FLOORING

PART 1 - GENERAL

1.1 SUMMARY

A. Section includes vinyl and rubber sheet flooring.

1.2 ACTION SUBMITTALS

A. Product Data: For each type of product.

B. Shop Drawings: For each type of flooring. Include flooring layouts, locations of seams, edges, columns, doorways, enclosing partitions, built-in furniture, cabinets, and cutouts.
   1. Show details of special patterns.

C. Samples: For each exposed product and for each color and texture specified in manufacturer's standard size, but not less than 6-by-9-inch sections.
   1. For heat-welding bead, manufacturer's standard-size Samples, but not less than 9 inches long, of each color required.

1.3 CLOSEOUT SUBMITTALS

A. Maintenance data.

PART 2 - PRODUCTS

2.1 PERFORMANCE REQUIREMENTS

A. Fire-Test-Response Characteristics: For resilient sheet flooring, as determined by testing identical products according to ASTM E 648 or NFPA 253 by a qualified testing agency.
   1. Critical Radiant Flux Classification: Class I, not less than 0.45 W/sq. cm.

B. FloorScore Compliance: Resilient sheet flooring shall comply with requirements of FloorScore certification.

2.2 VINYL SHEET FLOORING WITH BACKING (RSF)

A. Basis-of-Design: The design is based on the following products:
   1. Gerflor; Taralay Impression, Papyrus 0017 Ra (RSF-1).
   2. Gerflor; Taralay Impression, Urban 0034 Safran (RSF-2).
   3. Gerflor; Taralay Impression, Organic 0076 Garden (RSF-3).
   4. Gerflor: Taralay Impression, Uni 6551 Tilleul (RSF-4).
   5. Gerflor: Taralay Premium, Metallica 9745 Cosmic (RSF-5).
   6. Gerflor: Taralay Premium, Metallica 9460 Spectre (RSF-6).
   7. Gerflor: Taralay Impression, Urban 0032 Aubergine (RSF-7).
   8. Gerflor: Taralay Impression, Papyrus 0004 Anta (RSF-8).

B. Products: Approved equal must be submitted in writing prior to bid, and must match visual appearance of the Basis-of-Design.

C. Product Standard: ASTM F 1303.
   1. Type (Binder Content): Type I, minimum binder content of 90 percent.
   2. Wear-Layer Thickness: Grade 1.
   3. Overall Thickness: As standard with manufacturer.
   4. Interlayer Material: None.
   5. Backing Class: Class C (foamed plastic).

D. Wearing Surface: Embossed.

E. Sheet Width: 6.5 feet.

F. Seamless-Installation Method: Heat welded.

G. Colors and Patterns: As selected by Architect from full range of industry colors.

2.3 UNBACKED RUBBER SHEET FLOORING (RUB)

A. Basis-of-Design: The design is based on the following product:
   1. Johnsonite Rubber Sheet Flooring; Hammered 260 Deep Water.

B. Products: Approved equal must be submitted in writing prior to bid. Subject to compliance with requirements, available manufacturer’s that may be incorporated into the work include, but are not limited to, the following:
   1. Allstate Rubber Corp.
   2. Armstrong World Industries, Inc.
   3. Burke Mercer Flooring Products; Division of Burke Ind., Inc.
   4. Flexco.
   5. Johnsonite; A Tarkatt Company.
   6. Nora Systems, Inc.
   7. Mannington.
   8. Roppe Corporation, USA.
   9. YPI Corporation.

C. Product Standard: ASTM F 1859.
   1. Type: Type I (homogeneous rubber sheet).
   2. Thickness: As standard with manufacturer.
   3. Hardness: Manufacturer's standard hardness, measured using Shore, Type A durometer per ASTM D 2240.

D. Wearing Surface: Textured.

E. Sheet Width: 6 feet.

F. Seamless-Installation Method: Heat welded.

G. Colors and Patterns: As selected by Architect from full range of industry colors.

2.4 INSTALLATION MATERIALS

A. Trowelable Leveling and Patching Compounds: Latex-modified, portland cement based or blended hydraulic-cement-based formulation provided or

approved by resilient sheet flooring manufacturer for applications indicated.

B. Adhesives: Water-resistant type recommended by flooring and adhesive manufacturers to suit resilient sheet flooring and substrate conditions indicated.
   1. Adhesives shall have a VOC content of 60 g/L or less.

C. Seamless-Installation Accessories:
   1. Heat-Welding Bead: Manufacturer's solid-strand product for heat welding seams.
      a. Color: Match flooring.

PART 3 - EXECUTION

3.1 PREPARATION

A. Prepare substrates according to resilient sheet flooring manufacturer's written instructions to ensure adhesion of resilient sheet flooring.

B. Concrete Substrates: Prepare according to ASTM F 710.
   1. Verify that substrates are dry and free of curing compounds, sealers, and hardeners.
   2. Remove substrate coatings and other substances that are incompatible with adhesives and that contain soap, wax, oil, or silicone, using mechanical methods recommended by resilient sheet flooring manufacturer. Do not use solvents.
   3. Alkalinity and Adhesion Testing: Perform tests recommended by resilient sheet flooring manufacturer. Proceed with installation only after substrate alkalinity falls within range on pH scale recommended by manufacturer in writing, but not less than 5 or more than 9 pH.
   4. Moisture Testing: Proceed with installation only after substrates pass testing according to resilient sheet flooring manufacturer's written recommendations, but not less stringent than the following:
      a. Perform anhydrous calcium chloride test according to ASTM F 1869. Proceed with installation only after substrates have maximum moisture-vapor-emission rate of 3 lb of water/1000 sq. ft. in 24 hours.
      b. Perform relative humidity test using in situ probes according to ASTM F 2170. Proceed with installation only after substrates have a maximum 75 percent relative humidity level.

C. Fill cracks, holes, and depressions in substrates with trowelable leveling and patching compound; remove bumps and ridges to produce a uniform and smooth substrate.

D. Do not install resilient sheet flooring until it is the same temperature as the space where it is to be installed.
   1. Move floor coverings and installation materials into spaces where they will be installed at least 48 hours in advance of installation.

E. Immediately before installation, sweep and vacuum clean substrates to be covered by resilient sheet flooring.

3.2 RESILIENT SHEET FLOORING INSTALLATION

A. Comply with manufacturer's written instructions for installing resilient sheet flooring.

B. Unroll resilient sheet flooring and allow it to stabilize before cutting and fitting.

C. Lay out resilient sheet flooring as follows:
1. Maintain uniformity of flooring direction.
2. Minimize number of seams; place seams in inconspicuous and low-traffic areas, at least 6 inches away from parallel joints in flooring substrates.
3. Match edges of flooring for color shading at seams.
4. Avoid cross seams.

D. Scribe and cut resilient sheet flooring to butt neatly and tightly to vertical surfaces, permanent fixtures, and built-in furniture including cabinets, pipes, outlets, and door frames.

E. Extend resilient sheet flooring into toe spaces, door reveals, closets, and similar openings.

F. Maintain reference markers, holes, and openings that are in place or marked for future cutting by repeating on resilient sheet flooring as marked on substrates. Use chalk or other nonpermanent marking device.

G. Install resilient sheet flooring on covers for telephone and electrical ducts and similar items in installation areas. Maintain overall continuity of color and pattern between pieces of flooring installed on covers and adjoining flooring. Tightly adhere flooring edges to substrates that abut covers and to cover perimeters.

H. Adhere resilient sheet flooring to substrates using a full spread of adhesive applied to substrate to produce a completed installation without open cracks, voids, raising and puckering at joints, telegraphing of adhesive spreader marks, and other surface imperfections.

I. Seamless Installation:
1. Heat-Welded Seams: Comply with ASTM F 1516. Rout joints and heat weld with welding bead to permanently fuse sections into a seamless flooring. Prepare, weld, and finish seams to produce surfaces flush with adjoining flooring surfaces.

3.3 CLEANING AND PROTECTION

A. Comply with manufacturer's written instructions for cleaning and protecting resilient sheet flooring.

B. Cover resilient sheet flooring until Substantial Completion.

END OF SECTION 096516

SECTION 096519 - RESILIENT TILE FLOORING

PART 1 - GENERAL

1.1 SUMMARY

A. Section Includes:
   1. Rubber floor tile.
   2. Vinyl composition floor tile.
   3. Resilient channel tile.

B. Concrete: Coordinate alkalinity and moisture testing with General Contractor.

1.2 ACTION SUBMITTALS

A. Product Data: For each type of product.
   1. Include manufacturer’s installation instructions relative to moisture vapor emissions and relative humidity testing, and testing for alkalinity (pH range).

B. Shop Drawings: For each type of floor tile. Include floor tile layouts, edges, columns, doorways, enclosing partitions, built-in furniture, cabinets, and cutouts.
   1. Show details of special patterns.

C. Samples: Full-size units of each color and pattern of floor tile required.

1.3 CLOSEOUT SUBMITTALS

A. Maintenance data.

1.4 MAINTENANCE MATERIAL SUBMITTALS

A. Furnish extra materials that match products installed and that are packaged with protective covering for storage and identified with labels describing contents.
   1. Floor Tile: Furnish one box for every 50 boxes or fraction thereof, of each type, color and pattern of floor tile installed.

1.5 QAULITY ASSURANCE

A. Installer Qualifications: A qualified installer who employs workers for this project who are competent in techniques required by manufacturer for floor tile installation and seaming method indicated.
   1. Engage an installer who employs workers for this project who are trained or certified by floor tile manufacture for installation techniques required.

1.6 DELIVERY, STORAGE, AND HANDLING

A. Store floor tile and installation materials in dry spaces protected from the weather, with ambient temperatures maintained within range

recommended by manufacturer, but not less than 50 degrees F or more than 90 degrees F. Store floor tiles on flat surface.

1.7 FIELD CONDITIONS

A. Maintain ambient temperatures within range recommended by manufacturer in spaces to receive floor tile during the following time periods:
   1. 48 hours before installation.
   2. During installation.
   3. 48 hours after installation.

B. After installation and until Substantial Completion, maintain ambient temperatures within range recommended by manufacturer.

C. Close spaces to traffic during floor tile installation.

D. Close spaces to traffic for 48 hours after floor tile installation.

E. Install floor tile after other finishing operations, including painting, have been completed.

PART 2 - PRODUCTS

2.1 PERFORMANCE REQUIREMENTS

A. Fire-Test-Response Characteristics: For resilient tile flooring, as determined by testing identical products according to ASTM E 648 or NFPA 253 by a qualified testing agency.
   1. Critical Radiant Flux Classification: Class I, not less than 0.45 W/sq. cm.

B. FloorScore Compliance: Resilient tile flooring shall comply with requirements of FloorScore certification.

2.2 RUBBER FLOOR TILE (R.T.)

A. Basis-of-Design: The design is based on the following product:
   1. Expanko; Reztec Rubber Flooring, “Poppy” (R.T.).

B. Products: Approved equal must be submitted in writing prior to bid.

C. Material: Rubber floor tile shall be made of minimum five percent SBR and maximum 95 percent EPDM rubber with non-yellowing urethane binder. Material shall be colored throughout the tile with fade resistant pigments. Material shall be rated for flammability as Class I (ASTM E648) if 70 percent or greater EPDM material is specified. Material shall be rated for flammability as Class II for materials specified with less that 70 percent EPDM.

D. Thickness: 4.0 mm.

E. Size: 36 by 36 inches.

F. Density: Greater than 78 lbs/cubic foot.

2.3 VINYL COMPOSITION FLOOR TILE (VCT)

A. Basis-of-Design: The design is based on the following products:
   1. Armstrong; Standard Excelon, Imperial Texture 51866 Little Apple Green (VCT-1).
   2. Armstrong; Standard Excelon, Imperial Texture 51820 Marina Blue (VCT-2).
   3. Armstrong; Standard Excelon, Imperial Texture 51876 Golden (VCT-3).

B. Products: Approved equal must be submitted in writing prior to bid, and must match visual appearance of the Basis-of-Design. Subject to compliance with requirements, available manufacturers that may be incorporated into the Work include, but are not limited to, the following:
   1. Armstrong World Industries, Inc.
   2. Mannington Mills, Inc.
   3. Tarkett, Inc.

C. Tile Standard: ASTM F 1066, Class 2, through-pattern tile.

D. Wearing Surface: Smooth.

E. Thickness: 0.125 inch.

F. Size: 12 by 12 inches.

G. Colors and Patterns: As selected by Architect from full range of industry colors.

2.4 Resilient Channel Tile (CHT)

A. Basis-of-Design: The design is based on the following products:
   1. The Matworks Company LLC., www.thematworks.com; Interlocking “Channel Tile”; Green.

B. Products: Approved equal must be submitted in writing prior to bid, and must match function and visible appearance of the Basis-of-Design.

C. Material: 100 percent recycled PVC plastic with added UV stabilizers and fungus inhibitors.

D. Thickness: 0.5 inches.

E. Size: 12 by 12 inches.

F. Include manufacturer’s edge ramps to transition from resilient channel tile down to adjacent flooring surfaces. Edge ramps shall provide a slope no greater the 1:12.

2.5 INSTALLATION MATERIALS

A. Trowelable Leveling and Patching Compounds: Latex-modified, portland cement based or blended hydraulic-cement-based formulation provided or approved by floor tile manufacturer for applications indicated.

B. Adhesives: Water-resistant type recommended by floor tile and adhesive manufacturers to suit floor tile and substrate conditions indicated.

C. Floor Polish for VCT: Provide protective, liquid floor-polish products recommended by floor tile manufacturer.

PART 3 - EXECUTION

3.1 PREPARATION

A. Prepare substrates according to floor tile manufacturer's written instructions to ensure adhesion of resilient products.

B. Concrete Substrates: Prepare according to ASTM F 710.
1. Verify that substrates are dry and free of curing compounds, sealers, and hardeners.
2. Remove substrate coatings and other substances that are incompatible with adhesives and that contain soap, wax, oil, or silicone, using mechanical methods recommended by floor tile manufacturer. Do not use solvents.
3. Alkalinity and Adhesion Testing: Perform tests recommended by floor tile manufacturer. Proceed with installation only after substrate alkalinity falls within range on pH scale recommended by manufacturer in writing, but not less than 5 or more than 9 pH.
4. Moisture Testing: Proceed with installation only after substrates pass testing according to floor tile manufacturer's written recommendations, but not less stringent than the following:
a. Perform anhydrous calcium chloride test according to ASTM F 1869. Proceed with installation only after substrates have maximum moisture-vapor-emission rate of 3 lb of water/1000 sq. ft. in 24 hours.
b. Perform relative humidity test using in situ probes according to ASTM F 2170. Proceed with installation only after substrates have a maximum 75 percent relative humidity level.

C. Fill cracks, holes, and depressions in substrates with trowelable leveling and patching compound; remove bumps and ridges to produce a uniform and smooth substrate.

D. Do not install floor tiles until they are the same temperature as the space where they are to be installed.
1. At least 48 hours in advance of installation, move resilient floor tile and installation materials into spaces where they will be installed

E. Immediately before installation, sweep and vacuum clean substrates to be covered by resilient floor tile.

3.2 FLOOR TILE INSTALLATION

A. Comply with manufacturer's written instructions for installing floor tile.

B. Lay out floor tiles from center marks established with principal walls, discounting minor offsets, so tiles at opposite edges of room

are of equal width. Adjust as necessary to avoid using cut widths that equal less than one-half tile at perimeter.
1. Lay tiles square with room axis, except where pattern is indicated at 45 degree angle.

C. Match floor tiles for color and pattern by selecting tiles from cartons in the same sequence as manufactured and packaged, if so numbered. Discard broken, cracked, chipped, or deformed tiles.
1. Lay tiles with grain running in one direction.

D. Scribe, cut, and fit floor tiles to butt neatly and tightly to vertical surfaces and permanent fixtures including built-in furniture, cabinets, pipes, outlets, and door frames.

E. Extend floor tiles into toe spaces, door reveals, closets, and similar openings. Extend floor tiles to center of door openings.

F. Maintain reference markers, holes, and openings that are in place or marked for future cutting by repeating on floor tiles as marked on substrates. Use chalk or other nonpermanent marking device.

G. Install floor tiles on covers for telephone and electrical ducts, building expansion-joint covers, and similar items in finished floor areas. Maintain overall continuity of color and pattern between pieces of tile installed on covers and adjoining tiles. Tightly adhere tile edges to substrates that abut covers and to cover perimeters.

H. Adhere floor tiles to flooring substrates using a full spread of adhesive applied to substrate to produce a completed installation without open cracks, voids, raising and puckering at joints, telegraphing of adhesive spreader marks, and other surface imperfections.

3.3 CLEANING AND PROTECTION

A. Comply with manufacturer's written instructions for cleaning and protecting floor tile.

B. Perform the following operations immediately after completing floor tile installation.
1. Remove adhesive and other blemishes from exposed surfaces.
2. Sweep and vacuum surfaces thoroughly.
3. Damp-mop surfaces to remove marks and soil.

C. Protect floor tiles from mars, marks, indentations, and other damage from construction operations and placement of equipment and fixtures during remainder of construction period.

D. VCT Sealers and Finish Coats: Remove soil, visible adhesives, and surface blemishes from vinyl composition floor tile surfaces before applying liquid cleaners, sealers and finish products.
1. Sealer: Apply two base coats of liquid sealer.
2. Finish: Apply four coats of liquid floor finish. Buff to achieve gloss.

E. Cover floor tile until Substantial Completion.

F. END OF SECTION 096519

SECTION 096813 - TILE CARPETING

PART 1 - GENERAL

1.1 SUMMARY

A. Section includes modular, tufted carpet tile.

B. Concrete: Coordinate alkalinity and moisture testing with General Contractor.

1.2 PREINSTALLATION MEETINGS

A. Preinstallation Conference: Conduct conference at Project site, Peoria PlayHouse Childrens Museum, Glen Oak Park Pavilion, 2218 N. Prospect Road, Peoria, IL 61603.

1.3 ACTION SUBMITTALS

A. Product Data: For each type of product indicated.
   1. Include installation recommendations for each type of substrate.
   2. Include manufacturer’s installation instructions relative to moisture vapor emissions and relative humidity testing and testing for alkalinity (pH range).

B. Shop Drawings: Show the following:
   1. Columns, doorways, enclosing walls or partitions, built-in cabinets, and locations where cutouts are required in carpet tiles.
   2. Pattern type, location, and direction.
   3. Type, color and location of edge, transition, and other accessory strips.
   4. Transition details to other flooring materials.

C. Samples: For each exposed product and for each color and texture specified.
   1. Carpet Tile: Full-sized sample.
   2. Exposed edge, transition, and other accessory stripping: 12” long samples.

D. Product Schedule: For carpet tile. Use same designations indicated on Drawings.

1.4 INFORMATIONAL SUBMITTALS

A. Qualification Data: For Installer.

B. Sample warranty.

1.5 CLOSEOUT SUBMITTALS

A. Maintenance Data: For carpet tiles, to include in maintenance manuals. Include the following:

1. Methods for maintaining carpet tile, including cleaning and stain-removal products and procedures, and manufacturer's recommended maintenance schedule.
2. Precautions for cleaning materials and methods that could be detrimental to carpet tile.

1.6 QUALITY ASSURANCE

A. Fire-Test-Response Ratings: Where indicated, provide carpet tile identical to those of assemblies tested for fire response according to NFPA 253 by a qualified testing agency.

1.7 DELIVERY, STORAGE, AND HANDLING

A. Comply with CRI 104.

1.8 FIELD CONDITIONS

A. Comply with CRI 104 for temperature, humidity, and ventilation limitations.

B. Environmental Limitations: Do not deliver or install carpet tiles until wet work in spaces is complete and dry, and ambient temperatures and humidity conditions are maintained at occupancy levels during the remainder of the construction period.

C. Do not install carpet tiles over concrete slabs until slabs have cured and are sufficiently dry to bond with adhesive, and concrete slabs have pH range recommended by carpet tile manufacturer.

1.9 WARRANTY

A. Special Warranty for Carpet Tiles: Manufacturer agrees to repair or replace components of carpet tile installation that fail in materials or workmanship within specified warranty period.
1. Warranty does not include deterioration or failure of carpet tile due to unusual traffic, failure of substrate, vandalism, or abuse.
2. Failures include, but are not limited to, more than 10 percent edge raveling, snags, runs, dimensional stability, excess static discharge, loss of tuft bind strength, loss of face fiber, and delamination.
3. Warranty Period: Ten years from date of Substantial Completion.

PART 2 - PRODUCTS

2.1 CARPET TILE (CPT.T.)

A. Basis-of-Design: The design is based on the following products:
1. Interface: Cubic Colours 7257 Tapestry (CPT.T.-1).
2. Interface: Cubic Colours 7254 Northern Lights (CPT.T.-2).
3. Interface: Cubic Colours 7261 Yellow (CPT.T.-3)

B. Products: Approved equal must be submitted in writing prior to bid.

C. Color and Pattern: As selected by Architect from manufacturer's full range.

D. Fiber Content: 100 percent nylon 6.

E. Pile Characteristic: Tufted textured 100p pile.

F. Pile Thickness: .093 inches for finished carpet tile.

G. Gage: 12 ends per inch.

H. Surface Pile Weight: 18 oz./sq. yd.

I. Primary Backing/Backcoating: Manufacturer's standard composite materials, PVC, or Fiberglass-reinforced PVC. No cushion back.

J. Size: 19.69 by 19.69 inches.

K. Applied Soil-Resistance Treatment: Manufacturer's standard material.

L. Antimicrobial Treatment: Manufacturer's standard material.

M. Performance Characteristics: As follows:
1. Colorfastness to Light: Not less than 4 after 60 AFU (AATCC fading units) according to AATCC 16, Option E.
2. Electrostatic Propensity: Less than 3 kV according to AATCC 134.
3. Emissions: Provide carpet tile that complies with testing and product requirements of CRI's "Green Label Plus" program.

2.2 INSTALLATION ACCESSORIES

A. Trowelable Leveling and Patching Compounds: Latex-modified, hydraulic-cement-based formulation provided or recommended by carpet tile manufacturer.

B. Adhesives: Water-resistant, mildew-resistant, nonstaining, pressure-sensitive type to suit products and subfloor conditions indicated, that complies with flammability requirements for installed carpet tile and is recommended by carpet tile manufacturer for releasable installation.

C. Transition Strips: Rubber transition strips between carpet tile and dissimilar adjacent flooring, of height required to protect exposed edge of carpet, and of maximum lengths to minimize running joints.

PART 3 - EXECUTION

3.1 EXAMINATION

A. Examine substrates, areas, and conditions, with Installer present, for compliance with requirements for maximum moisture content, alkalinity range, installation tolerances, and other conditions affecting carpet tile performance. Examine carpet tile for type, color, pattern, and potential defects.

B. Concrete Subfloors: Verify that concrete slabs comply with ASTM F 710 and the following:
   1. Slab substrates are dry and free of curing compounds, sealers, hardeners, and other materials that may interfere with adhesive bond. Determine adhesion and dryness characteristics by performing bond and moisture tests recommended by carpet tile manufacturer.
   2. Subfloor finishes comply with requirements specified in Section 033000 "Cast-in-Place Concrete" for slabs receiving carpet tile.
   3. Subfloors are free of cracks, ridges, depressions, scale, and foreign deposits.
   4. Alkalinity and Adhesion Testing: Perform tests recommended by manufacturer. Proceed with installation only after substrates pass testing. Maximum acceptable ph is 9.0.
   5. Moisture Testing: Perform tests recommended by floor covering manufacturer. Proceed with installation only after substrates pass testing. Follow manufacturer's requirements for moisture testing as follows:
      a. Perform anhydrous calcium chloride test, ASTM F1869. Proceed with installation only after substrates have maximum moisture vapor emission rate of 5 lb of water/1000 sq ft in 24 hours.
      b. Or perform relative humidity test using in situ probes ASTM F 2170. Proceed with installation only after substrates have maximum 75 percent relative humidity level measurement.

C. Proceed with installation only after unsatisfactory conditions have been corrected.

3.2 PREPARATION

A. Comply with CRI 104, Section 6.2, "Site Conditions; Floor Preparation," and with carpet tile manufacturer's written installation instructions for preparing substrates indicated to receive carpet tile installation.

B. Use trowelable leveling and patching compounds, according to manufacturer’s written instructions, to fill cracks, holes, depressions, and protrusions in substrates. Fill or level cracks, holes and depressions 1/8″ wide or wider and protrusions more than 1/32″, unless more stringent requirements are required by manufacturer’s written instructions.

C. Remove coatings, including curing compounds, and other substances that are incompatible with adhesives and that contain soap, wax, oil, or silicone, without using solvents. Use mechanical methods recommended in writing by carpet tile manufacturer.

3.3 INSTALLATION

A. Comply with CRI 104, Section 14, "Carpet Modules," and with carpet tile manufacturer's written installation instructions.

B. Installation Method: Glue down; install every tile with full-spread, releasable, pressure-sensitive adhesive.

C. Maintain dye lot integrity. Do not mix dye lots in same area.

D. Cut and fit carpet tile to butt tightly to vertical surfaces, permanent fixtures, and built-in furniture including cabinets, pipes, outlets, edgings, thresholds, and nosings. Bind or seal cut edges as recommended by carpet tile manufacturer.

E. Extend carpet tile into toe spaces, door reveals, closets, open-bottomed obstructions, removable flanges, alcoves, and similar openings.

F. Maintain reference markers, holes, and openings that are in place or marked for future cutting by repeating on finish flooring as marked on subfloor. Use nonpermanent, nonstaining marking device.

G. Install pattern parallel to walls and borders.

3.4 CLEANING AND PROTECTION

A. Perform the following operations immediately after installing carpet tile:
   1. Remove excess adhesive, seam sealer, and other surface blemishes using cleaner recommended by carpet tile manufacturer.
   2. Remove yarns that protrude from carpet tile surface.
   3. Vacuum carpet tile using commercial machine with face-beater element.

B. Protect installed carpet tile to comply with CRI 104, Section 16, "Protecting Indoor Installations."

C. Protect carpet tile against damage from construction operations and placement of equipment and fixtures during the remainder of construction period. Use protection methods indicated or recommended in writing by carpet tile manufacturer.

END OF SECTION 096813

SECTION 096816 - SHEET CARPETING

TIPS:
To view non-printing **Editor's Notes** that provide guidance for editing, click on Masterworks/Single-File Formatting/Toggle/Editor's Notes.
To read **detailed research, technical information about products and materials, and coordination checklists**, click on Masterworks/Supporting Information.

PART 1 - GENERAL

1.1 SUMMARY

A. Section includes [tufted] [and] [woven] <Insert carpet construction> carpet[and carpet cushion].

1.2 PREINSTALLATION MEETINGS

A. Preinstallation Conference: Conduct conference at [**Project site**] <**Insert location**>.

1.3 ACTION SUBMITTALS

A. Product Data: For each type of product.

B. LEED Submittals:

1. Product Data for Credit EQ 4.3:

   a. For carpet, documentation indicating compliance with testing and product requirements of CRI's "Green Label Plus" program.
   b. For carpet cushion, documentation indicating compliance with testing and product requirements of CRI's "Green Label" program.
   c. For installation adhesive, including printed statement of VOC content.

2. Laboratory Test Reports for Credit EQ 4: For carpet[**and installation adhesives**], documentation indicating that products comply with the testing and product requirements of the California Department of Health Services' "Standard Practice for the Testing of Volatile Organic Emissions from Various Sources Using Small-Scale Environmental Chambers."

C. Shop Drawings: Show the following:

1. Columns, doorways, enclosing walls or partitions, built-in cabinets, and locations where cutouts are required in carpet.
2. Carpet type, color, and dye lot.
3. Seam locations, types, and methods.
4. Pile direction.

D. Samples: For each exposed product and for each color and texture specified.

E. Sustainability: Provide the Statement of the Achievement Level the carpet has attained for [**Bronze, 28 to 36**] [**Silver, 37 to 51**] [**Gold, 52 to 70**] points, based on specific Sustainable Attribute Performance for all product stages according to ANSI/NSF 140.

1.4 INFORMATIONAL SUBMITTALS

A. Product test reports.

B. Warrant: Sample of special warranty.

1.5 CLOSEOUT SUBMITTALS

A. Maintenance data.

1.6 QUALITY ASSURANCE

A. Installer Qualifications: An experienced Installer who is certified by the International Certified Floorcovering Installers Association at the [**Commercial II**] [**Master II**] <**Insert description**> certification level.

B. Fire-Test-Response Ratings: Where indicated, provide carpet[**and carpet cushion**] identical to those of assemblies tested for fire response per NFPA 253 by a qualified testing agency.

1.7 DELIVERY, STORAGE, AND HANDLING

A. Comply with CRI 104.

1.8 FIELD CONDITIONS

A. Comply with CRI 104 for temperature, humidity, and ventilation limitations.

1.9 WARRANTY

A. Special Warranty for Carpet: Manufacturer agrees to repair or replace components of carpet installation that fail in materials or workmanship within specified warranty period.

1. Warranty does not include deterioration or failure of carpet due to unusual traffic, failure of substrate, vandalism, or abuse.
2. Failures include, but are not limited to, more than 10 percent loss of face fiber, edge raveling, snags, runs, [**loss of tuft bind strength,**] [**excess static discharge,**] <**Insert failure characteristic**> and delamination.
3. Warranty Period: [**10**] <**Insert number**> years from date of Substantial Completion.

B. Special Warranty for Carpet Cushion: Manufacturer agrees to repair or replace components of carpet cushion installation that fail in materials or workmanship within specified warranty period.

1. Warranty includes consequent removal and replacement of carpet and accessories.

2. Warranty does not include deterioration or failure of carpet cushion due to unusual traffic, failure of substrate, vandalism, or abuse.
3. Failure includes, but is not limited to, permanent indentation or compression.
4. Warranty Period: [**10**] <**Insert number**> years from date of Substantial Completion.

PART 2 - PRODUCTS

2.1 TUFTED CARPET <Insert designation>

A. <Double click here to find, evaluate, and insert list of manufacturers and products.>

B. Color: [Match Architect's samples] [As selected by Architect from manufacturer's full range] <Insert color>.

C. Pattern: [Match Architect's samples] <Insert pattern>.

D. Fiber Content: [100 percent nylon 6, 6] [100 percent nylon 6] [100 percent polypropylene] <Insert fiber and content by percentage>.

E. Fiber Type: <Insert proprietary fiber type>.

F. Pile Characteristic: [Level-loop] [Cut] [Cut-and-loop] [Multilevel-loop] [Level tip shear] [Random shear] [Frieze] [Sculptured] <Insert characteristic> pile.

G. Yarn Twist: <Insert twist in **TPI**>.

H. Yarn Count: <Insert yarn count>.

I. Density: <Insert **oz./cu. yd.** >.

J. Pile Thickness: <**Insert inches**> for finished carpet[**per ASTM D 6859**].

K. Stitches: <Insert stitches per **inch**>.

L. Gage: <Insert gage in ends per **inch**>.

M. Face Weight: <Insert **oz./sq. yd.** >.

N. Total Weight: <**Insert oz./sq. yd.** > for finished carpet.

O. Primary Backing: [Manufacturer's standard material] [Woven polypropylene] [Nonwoven, polypropylene or polyester] <Insert specific primary backing material>.

P. Secondary Backing: [Manufacturer's standard material] [Woven polypropylene] [Nonwoven, polypropylene or polyester] [Woven jute] [Fiberglass] <Insert specific secondary backing material>.

Q. Backcoating: [Manufacturer's standard material] [SBR latex] [PVC] [Thermoplastic copolymer] <Insert backcoating; consult manufacturers>.

R. Backing System: <Insert proprietary name>.

S. Width: [**12 feet**] [**6 feet**] [**13.5 feet**] [**15 feet**] <Insert dimension>.

T. Applied Soil-Resistance Treatment: [Manufacturer's standard material] <Insert treatment>.

U. Antimicrobial Treatment: [Manufacturer's standard material] <Insert treatment>.

V. Performance Characteristics: As follows:

1. Appearance Retention Rating: [**Moderate traffic, 2.5**] [**Heavy traffic, 3.0**] [**Severe traffic, 3.5**] <**Insert number**> minimum per ASTM D 7330.
2. Critical Radiant Flux Classification: Not less than [**0.45 W/sq. cm**] [**0.22 W/sq. cm**].
3. Dry Breaking Strength: Not less than 100 lbf per ASTM D 2646.
4. Tuft Bind: Not less than [**3 lbf**] [**5 lbf**] [**6.2 lbf**] [**8 lbf**] [**10 lbf**] <**Insert value**> per ASTM D 1335.
5. Delamination: Not less than [**2.5 lbf/in.**] [**3.5 lbf/in.**] [**4 lbf/in.**] <**Insert value**> per ASTM D 3936.
6. Resistance to Insects: Comply with AATCC 24.
7. Colorfastness to Crocking: Not less than 4, wet and dry, per AATCC 165.
8. Colorfastness to Light: Not less than 4 after [**40**] [**60**] <**Insert number**> AFU (AATCC fading units) per AATCC 16, Option E.
9. Antimicrobial Activity: Not less than 2-mm halo of inhibition for gram-positive bacteria; not less than 1-mm halo of inhibition for gram-negative bacteria; no fungal growth; per AATCC 174.
10. Electrostatic Propensity: Less than [**3.5**] [**2**] <**Insert number**> kV per AATCC 134.
11. Emissions: Provide carpet that complies with testing and product requirements of CRI's "Green Label Plus" program.
12. Emissions: Provide carpet that complies with the product requirements of the California Department of Health Services' "Standard Practice for the Testing of Volatile Organic Emissions from Various Sources Using Small-Scale Environmental Chambers."

2.2 WOVEN CARPET <Insert designation>

A. <Double click here to find, evaluate, and insert list of manufacturers and products.>

B. Color: [Match Architect's samples] [As selected by Architect from manufacturer's full range] <Insert color>.

C. Pattern: [Match Architect's samples] <Insert pattern>.

D. Fiber Content: [100 percent wool] [80 percent wool; 20 percent nylon 6, 6] [80 percent wool; 20 percent nylon 6] <Insert fiber and content by percentage>.

1. Document that [**5 to 20**] [**85 to 100**] <**Insert number**> percent of the material feedstock for carpet is composed of biobased or recycled materials according to ANSI/NSF 140.

E. Face Construction: [Axminster] [Wilton] [Velvet] <Insert construction>.

F. Pile Characteristic: [**Level-loop**] [**Cut**] [**Cut-and-loop**] pile.

G. Yarn Twist: <Insert twist in **TPI**>.

H. Yarn Count: <Insert yarn count>.

I. Density: <Insert **oz./cu. yd.** >.

J. Pile Thickness: <**Insert inches**> for finished carpet[**per ASTM D 6859**].

K. Rows: <Insert number of lengthwise tufts per **inch**>.

L. Pitch: <Insert number of rows in **27 inches**>.

M. Face Weight: <Insert **oz./sq. yd.** >.

N. Total Weight: <**Insert oz./sq. yd.** > for finished carpet.

O. Backing: [Manufacturer's standard.] [As follows:]

1. Chain Warp: <**Insert material**>.
2. Stuffer Warp: <**Insert material**>.
3. Shot or Fill Weft: <**Insert material**>.
4. Backcoating: <**Insert backcoating**>.

P. Applied Soil-Resistance Treatment: [Manufacturer's standard material] <Insert treatment>.

Q. Antimicrobial Treatment: [Manufacturer's standard material] <Insert treatment>.

R. Performance Characteristics: As follows:

1. Appearance Retention Rating: [**Moderate traffic, 2.5**] [**Heavy traffic, 3.0**] [**Severe traffic, 3.5**] <**Insert number**> minimum per ASTM D 7330.
2. Critical Radiant Flux Classification: Not less than [**0.45 W/sq. cm**] [**0.22 W/sq. cm**].
3. Dry Breaking Strength: Not less than 100 lbf per ASTM D 2646.
4. Resistance to Insects: Comply with AATCC 24.
5. Colorfastness to Crocking: Not less than 4, wet and dry, per AATCC 165.
6. Colorfastness to Light: Not less than 4 after [**40**] [**60**] <**Insert number**> AFU (AATCC fading units) per AATCC 16, Option E.
7. Electrostatic Propensity: Less than [**3.5**] [**2**] <**Insert number**> kV per AATCC 134.
8. Emissions: Provide carpet that complies with testing and product requirements of CRI's "Green Label Plus" program.
9. Emissions: Provide carpet that complies with the product requirements of the California Department of Health Services' "Standard Practice for the Testing of Volatile Organic Emissions from Various Sources Using Small-Scale Environmental Chambers."

2.3 CARPET CUSHION <Insert designation>

A. <Double click here to find, evaluate, and insert list of manufacturers and products.>

B. Traffic Classification: CCC [Class I, moderate] [Class II, heavy] [Class III, extra-heavy] traffic.

C. Fiber Cushion: [Rubberized hair, mothproofed and sterilized] [Rubberized jute, mothproofed and sterilized] [Synthetic] [Resinated, recycled textile].

1. Weight: <**Insert oz./sq. yd.** >.
2. Thickness: <**Insert inches**> plus 5 percent maximum.
3. Density: <**Insert lb/cu. ft.** >.

D. Rubber Cushion: [Flat] [Rippled waffle] [Textured flat] [Reinforced].

1. Weight: <**Insert oz./sq. yd.** >.
2. Thickness: <**Insert inches**> plus 5 percent maximum.
3. Compression Resistance: <**Insert lb/sq. in.** > at [**25**] [**65**] percent per ASTM D 3676.
4. Density: <**Insert lb/cu. ft.** >.

E. Polyurethane-Foam Cushion: [Grafted prime] [Densified] [Bonded] [Mechanically frothed].

1. Compression Force Deflection at 65 Percent: <**Insert lb/sq. in. of polymer density**> per ASTM D 3574.
2. Thickness: <**Insert inches**>.
3. Density: <**Insert lb/cu. ft.** >.

F. Performance Characteristics: As follows:

1. Critical Radiant Flux Classification: Not less than [**0.45 W/sq. cm**] [**0.22 W/sq. cm**].
2. Noise Reduction Coefficient (NRC): <**Insert NRC**> per ASTM C 423.
3. Emissions: Provide carpet cushion that complies with testing and product requirements of CRI's "Green Label" program.
4. Emissions: Provide carpet cushion that complies with the product requirements of the California Department of Health Services' "Standard Practice for the Testing of Volatile Organic Emissions from Various Sources Using Small-Scale Environmental Chambers."

2.4 INSTALLATION ACCESSORIES

A. Trowelable Leveling and Patching Compounds: Latex-modified, hydraulic-cement-based formulation provided or recommended by carpet[**cushion**] manufacturer.

B. Adhesives: Water-resistant, mildew-resistant, nonstaining type to suit products and subfloor conditions indicated, that complies with flammability requirements for installed carpet and is recommended or provided by [**carpet manufacturer**] [**carpet and carpet cushion manufacturers**].

1. Use adhesives with VOC content not more than 50 g/L when calculated according to 40 CFR 59, Subpart D (EPA Method 24).
2. Use adhesives that comply with the product requirements of the California Department of Health Services' "Standard Practice for the Testing of Volatile Organic Emissions from Various Sources Using Small-Scale Environmental Chambers."

C. Tackless Carpet Stripping: Water-resistant plywood, in strips as required to match cushion thickness and that comply with CRI 104, Section 12.2.

D. Seam Adhesive: Hot-melt adhesive tape or similar product recommended by carpet manufacturer for sealing and taping seams and butting cut edges at backing to form secure seams and to prevent pile loss at seams.

PART 3 - EXECUTION

3.1 INSTALLATION

A. Examine substrates, areas, and conditions, with Installer present, for compliance with requirements for maximum moisture content, alkalinity range, installation tolerances, and other conditions affecting carpet performance. Examine carpet for type, color, pattern, and potential defects.

B. Concrete Subfloors: Verify that concrete slabs comply with ASTM F 710.

C. Proceed with installation only after unsatisfactory conditions have been corrected.

D. Preparation: Comply with CRI 104, Section 7.3, "Site Conditions; Floor Preparation," and with carpet manufacturer's written installation instructions for preparing substrates.

E. Installation: Comply with CRI 104 and [**carpet manufacturer's**] [**carpet and carpet cushion manufacturers'**] written installation instructions for the following:

1. Direct-Glue-Down Installation: Comply with CRI 104, Section 9, "Direct Glue-Down Installation."
2. Double-Glue-Down Installation: Comply with CRI 104, Section 10, "Double-Glue-Down Installation."
3. Carpet with Attached-Cushion Installation: Comply with CRI 104, Section 11, "Attached-Cushion Installations."
4. Preapplied Adhesive Installation: Comply with CRI 104, Section 11.4, "Pre-Applied Adhesive Systems (Peel and Stick)."
5. Hook-and-Loop Installation: Comply with CRI 104, Section 11.5, "Hook and Loop Technology."
6. Stretch-in Installation: Comply with CRI 104, Section 12, "Stretch-in Installations."
7. Stair Installation: Comply with CRI 104, Section 13, "Carpet on Stairs" for [**stretch-in**] [**glue-down**] installation.

F. Comply with carpet manufacturer's written recommendations and Shop Drawings for seam locations and direction of carpet; maintain

uniformity of carpet direction and lay of pile. At doorways, center seams under the door in closed position.

G. Do not bridge building expansion joints with carpet.

H. Cut and fit carpet to butt tightly to vertical surfaces, permanent fixtures, and built-in furniture including cabinets, pipes, outlets, edgings, thresholds, and nosings. Bind or seal cut edges as recommended by carpet manufacturer.

I. Extend carpet into toe spaces, door reveals, closets, open-bottomed obstructions, removable flanges, alcoves, and similar openings.

J. Maintain reference markers, holes, and openings that are in place or marked for future cutting by repeating on finish flooring as marked on subfloor. Use nonpermanent, nonstaining marking device.

K. Install pattern parallel to walls and borders to comply with CRI 104, Section 15, "Patterned Carpet Installations" and with carpet manufacturer's written recommendations.

L. Comply with carpet cushion manufacturer's written recommendations.[**Install carpet cushion seams at 90-degree angle with carpet seams.**]

M. Perform the following operations immediately after installing carpet:

1. Remove excess adhesive, seam sealer, and other surface blemishes using cleaner recommended by carpet manufacturer.
2. Remove yarns that protrude from carpet surface.
3. Vacuum carpet using commercial machine with face-beater element.

N. Protect installed carpet to comply with CRI 104, Section 16, "Protecting Indoor Installations."

END OF SECTION 096816

SECTION 099113 - EXTERIOR PAINTING

PART 1 - GENERAL

1.1 SUMMARY

A. Section includes surface preparation and the application of paint systems on the following exterior substrates:
   1. Steel.
   2. Galvanized metal.
   3. Wood.

1.2 DEFINITIONS

A. Gloss Level 1: Not more than 5 units at 60 degrees and 10 units at 85 degrees, according to ASTM D 523.

B. Gloss Level 3: 10 to 25 units at 60 degrees and 10 to 35 units at 85 degrees, according to ASTM D 523.

C. Gloss Level 4: 20 to 35 units at 60 degrees and not less than 35 units at 85 degrees, according to ASTM D 523.

D. Gloss Level 5: 35 to 70 units at 60 degrees, according to ASTM D 523.

E. Gloss Level 6: 70 to 85 units at 60 degrees, according to ASTM D 523.

F. Gloss Level 7: More than 85 units at 60 degrees, according to ASTM D 523.

1.3 ACTION SUBMITTALS

A. Product Data: For each type of product. Include preparation requirements and application instructions.

B. Samples: For each type of paint system and each color and gloss of topcoat.
   1. Submit samples on rigid backing, 8 inches square.
   2. Label each sample for location and application area.

C. Product List: For each product indicated. Include the following:
   1. Printout of current "MPI Approved Products List" for each product category specified, with the proposed product highlighted.
   2. Cross-reference to paint system and locations of application areas. Use same designations indicated on Drawings and in schedules.
   3. VOC content.

1.4 MAINTENANCE MATERIAL SUBMITTALS

A. Furnish extra materials, from the same product run, that match products installed and that are packaged with protective covering for storage. Label containers with exact product and its location installed on the building.

1. Paint: Five percent, but not less than 1 gal. of each material and color applied.

1.5 DELIVERY, STORAGE, AND HANDLING

A. Store materials not in use in tightly covered containers in well-ventilated areas with ambient temperatures continuously maintained at not less than 45 degrees F.
   1. Maintain containers in clean condition, free of foreign materials and residue.
   2. Remove rags and waste from storage areas daily.

1.6 FIELD CONDITIONS

A. Apply paints only when temperature of surfaces to be painted and ambient air temperatures are between 50 and 95 degrees F.

B. Do not apply paints in snow, rain, fog, or mist; when relative humidity exceeds 85 percent; at temperatures less the 5 degrees F above the dew point; or to damp or wet surfaces.

PART 2 - PRODUCTS

2.1 COLORS

A. Basis-of-Design: The design is based on the following color:
   1. Sherwin Williams; SW6991 Black Magic (PNT-15).

B. All exterior new and existing handrails and guardrails are to be painted the color listed above.

C. Any exterior wood called out to be painted: color to be selected by Architect from manufacturer’s full range.

2.2 MANUFACTURERS

A. Manufacturers: Subject to compliance with requirements, available manufacturers offering products that may be incorporated into the work include, but are not limited to, the following:
   1. Behr Process Corporation.
   2. Benjamin Moore & Co. LTD.
   3. Coronado Paint; Insl-X Products Corp.; a Benjamin Moore Co.
   4. Diamond Vogel Paints.
   5. Dulux (formerly ICI Paints); a brand of AkzoNoble.
   6. Glidden Professional.
   7. M.A.B. Paints.
   8. PPG Architectural Finishes, Inc.
   9. Pratt & Lambert.
   10. Sherwin-Williams; Paint Stores Group.
   11. Zinsser; Rust-Oleum Corporation.

B. Products: Subject to compliance with requirements, provide product listed in other Part 2 articles for the paint category indicated.

2.3 PAINT, GENERAL

A. MPI Standards: Provide products that comply with MPI standards indicated and that are listed in its "MPI Approved Products List."

B. Material Compatibility:
   1. Provide materials for use within each paint system that are compatible with one another and substrates indicated, under conditions of service and application as demonstrated by manufacturer, based on testing and field experience.
   2. For each coat in a paint system, provide products recommended in writing by manufacturers of topcoat for use in paint system and on substrate indicated.

C. VOC Content: Provide materials that comply with VOC limits of authorities having jurisdiction in regulation with the State of Illinois Environmental Protection Agency and Ozone Transport Commission.

D. Colors: As selected by Architect from manufacturer's full range.

2.4 METAL PRIMERS

A. Primer, Alkyd, Anti-Corrosive for Metal: MPI #79.

B. Primer, Galvanized, Water Based: MPI #134.

2.5 WOOD PRIMERS

A. Primer, Latex for Exterior Wood: MPI #6.

2.6 WATER-BASED PAINTS

A. Latex, Exterior Semi-Gloss (Gloss Level 5): MPI #11.

B. Light Industrial Coating, Exterior, Water Based, Semi-Gloss (Gloss Level 5): MPI #163.

PART 3 - EXECUTION

3.1 EXAMINATION

A. Examine substrates and conditions, with Applicator present, for compliance with requirements for maximum moisture content and other conditions affecting performance of the Work.

B. Verify suitability of substrates, including surface conditions and compatibility with existing finishes and primers.

C. Proceed with coating application only after unsatisfactory conditions have been corrected.
   1. Application of coating indicates acceptance of surfaces and conditions.

3.2 PREPARATION

A. Comply with manufacturer's written instructions and recommendations in "MPI Manual" applicable to substrates and paint systems indicated.

B. Remove hardware, covers, plates and similar items already in place that are removable and are not to be painted. If removal is impractical of impossible because of size or weight of items, provide surface-applied protection before surface preparation and painting.
   1. After completing painting operations, use workers skilled in the trades involved to reinstall items that were removed. Remove surface-applied protection if any.

C. Clean substrates of substances that could impair bond of paints, including dust, dirt, oil, grease, and incompatible paints and encapsulants.
   1. Remove incompatible primers and reprime substrate with compatible primers or apply tie coat as required to produce paint systems indicated.

D. Steel Substrates: Remove rust, loose mill scale, and shop primer, if any. Clean using methods recommended in writing by paint manufacturer but not less than the following:
   1. SSPC-SP 2, “Hand Tool Cleaning”.
   2. SSPC-SP 3, “Power Tool Cleaning”.
   3. SSPC-SP 7/NACE No. 4, “Brush-off Blast Cleaning”.
   4. SSPC-SP 11, “Power Tool Cleaning”.

E. Shop-Primed Steel Substrates: Clean field welds, bolted connections, and abraded areas of shop paint, and paint exposed areas with the same material as used for shop priming to comply with SSPC-PA1 for touching up shop-primed surfaces.

F. Galvanized-Metal Substrates: Remove grease and oil residue from galvanized sheet metal fabricated from coil stock by mechanical methods to produce clean, lightly etched surfaces that promote adhesion of subsequently applied paints.

G. Apply a bonding primer to existing painted surfaces prior to applying top coats.

3.3 APPLICATION

A. Apply paints according to manufacturer's written instructions and recommendations in "MPI Manual."
   1. Use applicators and techniques suited for paint and substrate indicated.
   2. Paint surfaces behind movable equipment and furniture same as similar exposed surfaces. Before final installation, paint surfaces behind permanently fixed equipment or furniture with prime coat only.
   3. Paint front and backsides of access panels, removable or hinged covers, and similar hinged items to match exposed surfaces.
   4. Do not paint over labels of independent testing agencies or equipment name, identification, performance rating, or nomenclature plates.

5. Primers specified in painting schedules may be omitted on items that are factory primed or factory finished if acceptable to topcoat manufacturers.

B. Tint each undercoat a lighter shade to facilitate identification of each coat if multiple coats of same material are to be applied. Tint undercoats to match color of topcoat, but provide sufficient difference in shade of undercoats to distinguish each separate coat.

C. If undercoats or other conditions show through topcoat, apply additional coats until cured film has a uniform paint finish, color, and appearance.

D. Apply paints to produce surface films without cloudiness, spotting, holidays, laps, brush marks, roller tracking, runs, sags, ropiness, or other surface imperfections. Cut in sharp lines and color breaks.

E. Painting Fire Suppression, Plumbing, HVAC, Electrical, Communication, and Electronic Safety and Security Work:
1. Paint the following work where exposed in equipment rooms:
a. Equipment, including panelboards and switch gear.
b. Uninsulated metal piping.
c. Uninsulated plastic piping.
d. Pipe hangers and supports.
e. Metal conduit.
f. Plastic conduit.
g. Tanks that do not have factory-applied final finishes.
h. Duct, equipment, and pipe insulation having cotton or canvas insulation covering or other paintable jacket material.
2. Paint the following work where exposed in occupied spaces:
a. Equipment, including panelboards.
b. Uninsulated metal piping.
c. Uninsulated plastic piping.
d. Pipe hangers and supports.
e. Metal conduit.
f. Plastic conduit.
g. Duct, equipment, and pipe insulation having cotton or canvas insulation covering or other paintable jacket material.
h. Other items as directed by Architect.
3. Paint portions of internal surfaces of metal ducts, without liner, behind air inlets and outlets that are visible from occupied spaces.

F. Existing Substrates: At areas where new wall/ceiling finishes are installed adjacent to existing, match visual finish and texture to that of existing finish and texture, unless otherwise noted.

3.4 CLEANING AND PROTECTION

A. At end of each workday, remove rubbish, empty cans, rags, and other discarded materials from project site.

B. After completing paint application, clean spattered surfaces. Remove spattered paints by washing, scraping or other methods. Do not scratch or damage adjacent finished surfaces.

C. Protect work of other trades against damage from paint application. Correct damage to work of other trades by cleaning, repairing, replacing, and refinishing, as approved by Architect, and leave in an undamaged condition.

D. At completion of construction activities of other trades, touch up and restore damaged or defaced painted surfaces.

3.5 EXTERIOR PAINTING SCHEDULE

A. Steel Substrates:
   1. Water-Based Light Industrial Coating System:
      a. Prime Coat: Primer, alkyd, anti-corrosive for metal, MPI #79.
      b. Intermediate Coat: Light industrial coating, exterior, water based, matching topcoat.
      c. Topcoat: Light industrial coating, exterior, water based, semi-gloss (Gloss Level 5), MPI #163.

B. Galvanized-Metal Substrates:
   1. Water-Based Light Industrial Coating System:
      a. Prime Coat: Primer, galvanized metal, as recommended in writing by topcoat manufacturer for exterior use on galvanized-metal substrates with topcoat indicated, MPI #134.
      b. Intermediate Coat: Light industrial coating, exterior, water based, matching topcoat.
      c. Topcoat: Light industrial coating, exterior, water based, semi-gloss (Gloss Level 5), MPI #163.

C. Wood Substrates: Including wood trim, architectural woodwork, doors, windows, wood-based panel products, glued-laminated construction, exposed joists, exposed beams.
   1. Latex System:
      a. Prime Coat: Primer, latex for exterior wood, MPI #6.
      b. Intermediate Coat: Latex, exterior, matching topcoat.
      c. Topcoat: Latex, exterior semi-gloss (Gloss Level 5), MPI #11.

END OF SECTION 099113

SECTION 099123 - INTERIOR PAINTING

PART 1 - GENERAL

1.1 SUMMARY

A. Section includes surface preparation and the application of paint systems on the following interior substrates:
   1. Concrete.
   2. Clay masonry.
   3. Concrete masonry units (CMU).
   4. Steel.
   5. Cast iron.
   6. Galvanized metal.
   7. Wood.
   8. Gypsum board.
   9. Plaster.
   10. Cotton or canvas insulation covering.
   11. ASJ insulation covering.

1.2 DEFINITIONS

A. Gloss Level 1: Not more than 5 units at 60 degrees and 10 units at 85 degrees, according to ASTM D 523.

B. Gloss Level 2: Not more than 10 units at 60 degrees and 10 to 35 units at 85 degrees, according to ASTM D 523.

C. Gloss Level 3: 10 to 25 units at 60 degrees and 10 to 35 units at 85 degrees, according to ASTM D 523.

D. Gloss Level 4: 20 to 35 units at 60 degrees and not less than 35 units at 85 degrees, according to ASTM D 523.

E. Gloss Level 5: 35 to 70 units at 60 degrees, according to ASTM D 523.

F. Gloss Level 6: 70 to 85 units at 60 degrees, according to ASTM D 523.

G. Gloss Level 7: More than 85 units at 60 degrees, according to ASTM D 523.

1.3 ACTION SUBMITTALS

A. Product Data: For each type of product. Include preparation requirements and application instructions.

B. Samples: For each type of paint system and in each color and gloss of topcoat.
   1. Submit samples on rigid backing, 8″ square.
   2. Label each sample for location and application area.

C. Product List: For each product indicated. Include the following:
   1. Printout of current "MPI Approved Products List" for each product category specified in Part 2, with the proposed product highlighted.

2. Cross-reference to paint system and locations of application areas. Use same designations indicated on Drawings and in schedules.
3. VOC content.

1.4 MAINTENANCE MATERIAL SUBMITTALS

A. Furnish extra materials, from the same product run, that match products installed and that are packaged with protective covering for storage. Label containers with exact product and its location installed in the building.
1. Paint: Five percent, but not less than 1 gal. of each material and color applied.

1.5 DELIVERY, STORAGE AND HANDLING

A. Store materials not in use in tightly covered containers in well-ventilated areas with ambient temperatures continuously maintained at not less than 45 degrees F.
1. Maintain containers in clean condition, free of foreign materials and residue.
2. Remove rags and waste from storage areas daily.

1.6 FIELD CONDITIONS

A. Apply paints only when temperature of surface to be painted and ambient air temperatures are between 50 and 95 degrees F.

B. Do not apply paints when relative humidity exceeds 85 percent; at temperatures less than 5 degrees F above the dew point or to damp or wet surfaces.

PART 2 - PRODUCTS

2.1 COLORS

A. Basis-of-Design: The design is based on the following colors:
1. Sherwin Williams; SW6298 Concerto (PNT-1)
2. Sherwin Williams; SW6640 Tangerine (PNT-2)
3. Sherwin Williams; SW6793 Bluebell (PNT-3)
4. Sherwin Williams; SW6615 Peppery (PNT-4)
5. Sherwin Williams; SW6612 Ravishing Coral (PNT-5)
6. Sherwin Williams; SW6674 Jonquil (PNT-6)
7. Sherwin Williams; SW6676 Butterfield (PNT-7)
8. Sherwin Williams; SW6710 Melange Green (PNT-8)
9. Sherwin Williams; SW6705 High Strung (PNT-9)
10. Sherwin Williams; SW6296 Fading Rose (PNT-10)
11. Sherwin Williams; SW6379 Jersey Cream (PNT-11)
12. Sherwin Williams; SW6650 Marquis Orange (PNT-12)
13. Sherwin Williams; SW6794 Flyway (PNT-13)
14. Sherwin Williams; SW7005 Pure White (PNT-14)
15. Sherwin Williams; SW6991 Black Magic (PNT-15)

2.2 MANUFACTURERS

A. Manufacturers: Subject to compliance with requirements, available manufacturers offering products that may be incorporated into the Work include, but are not limited to, the following:
   1. Behr Process Corporation.
   2. Benjamin Moore & Co. LTD.
   3. Coronado Paint; Insl-X Products Corp.; a Benjamin Moore Co.
   4. Diamond Vogel Paints.
   5. Dulux (formerly ICI Paints); a brand of AkzoNoble.
   6. Glidden Professional.
   7. M.A.B. Paints.
   8. PPG Architectural Finishes, Inc.
   9. Pratt & Lambert.
   10. Sherwin-Williams; Paint Stores Group; Sherwin-Williams Company (The).
   11. Zinsser.

2.3 PAINT, GENERAL

A. MPI Standards: Provide products that comply with MPI standards indicated and that are listed in its "MPI Approved Products List."

B. Material Compatibility:
   1. Provide materials for use within each paint system that are compatible with one another and substrates indicated, under conditions of service and application as demonstrated by manufacturer, based on testing and field experience.
   2. For each coat in a paint system, provide products recommended in writing by manufacturers of topcoat for use in paint system and on substrate indicated.

C. VOC Content: Products shall comply with VOC limits of authorities having jurisdiction in regulation with the State of Illinois Environmental Protection Agency and Ozone Transport Commission. For interior paints and coatings applied at Project site, the following VOC limits, exclusive of colorants added to a tint base, when calculated according to 40 CFR 59, Subpart D (EPA Method 24), shall apply according to standards and limitations for organic material emissions.
   1. Flat Paints and Coatings: 50 g/L.
   2. Nonflat Paints and Coatings: 150 g/L.
   3. Dry-Fog Coatings: 400 g/L.
   4. Primers, Sealers, and Undercoaters: 200 g/L.
   5. Anticorrosive and Antirust Paints Applied to Ferrous Metals: 400 g/L. Rust preventative.
   6. Zinc-Rich Industrial Maintenance Primers: 340 g/L.
   7. Floor Coatings: 100 g/L.

D. Colors: As selected by Architect from manufacturer's full range. Exact color and their locations shall be indicated in a color schedule during the submittal phase.

2.4 BLOCK FILLERS

A. Block Filler, Latex, Interior/Exterior: MPI #4.

2.5 PRIMERS/SEALERS

A. Primer Sealer, Latex, Interior: MPI #50.

B. Primer, Alkali Resistant, Water Based: MPI #3.

C. Primer, Latex, for Interior Wood: MPI #39.

2.6 METAL PRIMERS

A. Primer, Rust-Inhibitive, Water Based: MPI #107.

B. Primer, Alkyd, Anti-Corrosive, for Metal: MPI #79.

C. Primer, Alkyd, Quick Dry, for Metal: MPI #76.

2.7 WATER-BASED PAINTS

A. Latex, Interior, High Performance Architectural, (Gloss Level 4): MPI #140.

B. Latex, Interior, High Performance Architectural, Semi-Gloss (Gloss Level 5): MPI #141.

C. Light Industrial Coating, Interior, Water Based, Semi-Gloss (Gloss Level 5): MPI #153.

2.8 DRY FOG/FALL COATINGS

A. Dry Fall, Latex, Flat: MPI #118.

B. Dry Fall, Water Based, for Galvanized Steel, Flat (Gloss Level 1): MPI #133.

C. Dry Fall, Alkyd, Flat: MPI #55.

2.9 FLOOR COATINGS

A. Floor Paint, Latex, Low Gloss (Maximum Gloss Level 3): MPI #60.

PART 3 - EXECUTION

3.1 EXAMINATION

A. Examine substrates and conditions, with Applicator present, for compliance with requirements for maximum moisture content and other conditions affecting performance of the Work.

B. Maximum Moisture Content of Substrates: When measured with an electronic moisture meter as follows:
1. Concrete: 12 percent.

2. Masonry (Clay and CMU): 12 percent.
3. Wood: 15 percent.
4. Gypsum Board: 12 percent.
5. Plaster: 12 percent.

C. Verify suitability of substrates, including surface conditions and compatibility with existing finishes and primers. For gypsum board substrates, verify that finishing compound is sanded smooth.

D. Proceed with coating application only after unsatisfactory conditions have been corrected.
1. Application of coating indicates acceptance of surfaces and conditions.

3.2 PREPARATION

A. Comply with manufacturer's written instructions and recommendations in "MPI Manual" applicable to substrates indicated.

B. Remove hardware, covers, plates, and similar items already in place that are removable and are not to be painted. If removal is impractical or impossible because of size or weight of item, provide surface-applied protection before surface preparation and painting.
1. After completing painting operations, use workers skilled in the trades involved to reinstall items that were removed. Remove surface-applied protection if any.

C. Clean substrates of substances that could impair bond of paints, including dust, dirt, oil, grease, and incompatible paints and encapsulants.
1. Remove incompatible primers and reprime substrate with compatible primers or apply tie coat as required to produce paint systems indicated.

D. Steel Substrates: Remove rust, loose mill scale, and shop primer, if any. Clean using methods recommended in writing by paint manufacturer but not less than the following:
1. SSPC-SP 2, “Hand Tool Cleaning”.
2. SSPC-SP 3, “Power Tool Cleaning”.
3. SSPC-SP 7/NACE No. 4, “Brush-off Blast Cleaning”.
4. SSPC-SP 11, “Power Tool Cleaning to Bare Metal”.

E. Shop-Primed Steel Substrates: Clean field welds, bolted connections, and abraded areas of shop paint, and paint exposed areas with the same material as used for shop priming to comply with SSPC-PA1 for touching up shop-primed surfaces.

F. Galvanized-Metal Substrates: Remove grease and oil residue from galvanized sheet metal fabricated from coil stock by mechanical methods to produce clean, lightly etched surfaces that promote adhesion of subsequently applied paints.

G. Apply a bonding primer to existing painted surfaces prior to applying top coats.

3.3 APPLICATION

A. Apply paints according to manufacturer's written instructions and to recommendations in "MPI Manual."
   1. Use applicators and techniques suited for paint and substrate indicated.
   2. Paint surfaces behind movable equipment and furniture same as similar exposed surfaces. Before final installation, paint surfaces behind permanently fixed equipment or furniture with prime coat only.
   3. Paint front and backsides of access panels, removable or hinged covers, and similar hinged items to match exposed surfaces.
   4. Do not paint over labels of independent testing agencies or equipment name, identification, performance rating, or nomenclature plates.
   5. Primers specified in painting schedules may be omitted on items that are factory primed or factory finished if acceptable to topcoat manufacturers.

B. Tint each undercoat a lighter shade to facilitate identification of each coat if multiple coats of same material are to be applied. Tint undercoats to match color of topcoat, but provide sufficient difference in shade of undercoats to distinguish each separate coat.

C. If undercoats or other conditions show through topcoat, apply additional coats until cured film has a uniform paint finish, color, and appearance.

D. Apply paints to produce surface films without cloudiness, spotting, holidays, laps, brush marks, roller tracking, runs, sags, ropiness, or other surface imperfections. Cut in sharp lines and color breaks.

E. Painting Fire Suppression, Plumbing, HVAC, Electrical, Communication, and Electronic Safety and Security Work:
   1. Paint the following work where exposed in equipment rooms:
      a. Equipment, including panelboards and switch gear.
      b. Uninsulated metal piping.
      c. Uninsulated plastic piping.
      d. Pipe hangers and supports.
      e. Metal conduit.
      f. Plastic conduit.
      g. Tanks that do not have factory-applied final finishes.
      h. Duct, equipment, and pipe insulation having cotton or canvas insulation covering or other paintable jacket material.
   2. Paint the following work where exposed in occupied spaces:
      a. Equipment, including panelboards.
      b. Uninsulated metal piping.
      c. Uninsulated plastic piping.
      d. Pipe hangers and supports.
      e. Metal conduit.
      f. Plastic conduit.
      g. Duct, equipment, and pipe insulation having cotton or canvas insulation covering or other paintable jacket material.
      h. Other items as directed by Architect.

3. Paint portions of internal surfaces of metal ducts, without liner, behind air inlets and outlets that are visible from occupied spaces.

F. Existing Substrates: At areas where new wall/ceiling finishes are installed adjacent to existing, match visual finish and texture to that of existing finish and texture, unless otherwise noted.

3.4 CLEANING AND PROTECTION

A. At end of each workday, remove rubbish, empty cans, rags and other discarded materials from project site.

B. After completing paint application, clean spattered surfaces. Remove spattered paints by washing, scraping or other methods. Do not scratch or damage adjacent finished surfaces.

C. Protect work of other trades against damage from paint application. Correct damage to work of other trades by cleaning, repairing, replacing, and refinishing, as approved by Architect, and leave in an undamaged condition.

D. At completion of construction activities of other trades, touch up and restore damaged or defaced painted surfaces.

3.5 INTERIOR PAINTING SCHEDULE

A. Concrete Substrates, Traffic Surfaces:
1. Latex Floor Enamel System:
a. Prime Coat: Floor paint, latex, low gloss (maximum Gloss Level 3), MPI #60.
b. Intermediate Coat: Floor paint, latex, low gloss (maximum Gloss Level 3), MPI #60.
c. Topcoat: Floor paint, latex, low gloss (maximum Gloss Level 3), MPI #60.

B. Clay-Masonry Substrates:
1. High-Performance Architectural Latex System:
a. Prime Coat: Primer, alkali resistant, water based, MPI #3.
b. Intermediate Coat: Latex, interior, high performance architectural, matching topcoat.
c. Topcoat: Latex, interior, high performance architectural, (Gloss Level 4), MPI #140.

C. CMU Substrates:
1. High-Performance Architectural Latex System:
a. Block Filler: Block filler, latex, interior/exterior, MPI #4.
b. Intermediate Coat: Latex, interior, high performance architectural, matching topcoat.
c. Topcoat: Latex, interior, high performance architectural, (Gloss Level 4), MPI #140.

D. Steel Substrates:
1. Water-Based Dry-Fall System: (exposed piping in ceilings)
a. Prime Coat: Primer, alkyd, anti-corrosive, for metal, MPI #79 or primer, alkyd, quick dry, for metal, MPI #76.

b. Intermediate Coat: Dry fall, latex, flat, MPI #118.
c. Topcoat: Dry fall, latex, flat, MPI #118.

2. Water-Based Light Industrial Coating System (handrails, hollow metal doors and frames):
a. Prime Coat: Primer, rust-inhibitive, water based MPI #107.
b. Intermediate Coat: Light industrial coating, interior, water based, matching topcoat.
c. Topcoat: Light industrial coating, interior, water based, semi-gloss (Gloss Level 5), MPI #153.

E. Galvanized-Metal Substrates:
1. Water-Based Dry-Fall System:
a. Prime Coat: Dry fall, water based, for galvanized steel, flat (Gloss Level 1), MPI #133.
b. Intermediate Coat: Dry fall, water-based, for galvanized steel, flat (Gloss Level 1), MPI #133.
c. Topcoat: Dry fall, water based, for galvanized steel, flat (Gloss Level 1), MPI #133.

F. Wood Substrates: Including wood trim, architectural woodwork, doors, windows, exposed joists, exposed beams.
1. High-Performance Architectural Latex System (wood trim, architectural woodwork, doors and windows):

a. Prime Coat: Primer, latex, for interior wood, MPI #39.
b. Intermediate Coat: Latex, interior, high performance architectural, matching topcoat.
c. Topcoat: Latex, interior, high performance architectural, semi-gloss (Gloss Level 5), MPI #141.

2. Water-Based Dry Fall System (exposed joists and exposed beams):
a. Prime Coat: Primer, latex, for interior wood, MPI #39.
b. Intermediate Coat: Dry fall, latex, flat, MPI #118.
c. Top Coat: Dry fall, latex, flat, MPI #118.

G. Gypsum Board and Plaster Substrates:
1. High-Performance Architectural Latex System:
a. Prime Coat: Primer sealer, latex, interior, MPI #50.
b. Intermediate Coat: Latex, interior, high performance architectural, matching topcoat.
c. Topcoat: Latex, interior, high performance architectural, (Gloss Level 4), MPI #140.

END OF SECTION 099123

SECTION 101423 - PANEL SIGNAGE

PART 1 - GENERAL

1.1 SUMMARY

A. Section Includes:
   1. Room-identification signs.

1.2 ACTION SUBMITTALS

A. Product Data: For each type of product.

B. Shop Drawings: For panel signs.

   1. Include fabrication and installation details and attachments to other work.
   2. Show sign mounting heights, locations of supplementary supports to be provided by others, and accessories.
   3. Show message list, typestyles, graphic elements, including raised characters and Braille, and layout for each sign at least half size.

C. Samples: For each exposed product and for each color and texture specified.

D. Sign Schedule: Use same designations specified or indicated on Drawings or in a sign schedule.

1.3 INFORMATIONAL SUBMITTALS

A. Sample warranty.

1.4 CLOSEOUT SUBMITTALS

A. Maintenance data.

1.5 WARRANTY

A. Special Warranty: Manufacturer agrees to repair or replace components of signs that fail in materials or workmanship within specified warranty period.

   1. Warranty Period: Five years from date of Substantial Completion.

PART 2 - PRODUCTS

2.1 PERFORMANCE REQUIREMENTS

A. Accessibility Standard: Comply with applicable provisions in the U.S. Architectural & Transportation Barriers Compliance Board's ADA-ABA Accessibility Guidelines for Buildings and Facilities and ICC A117.1 for signs.

B. Room-Identification Sign: Sign with smooth, uniform surfaces; with message and characters having uniform faces, sharp corners, and precisely formed lines and profiles; and as follows:

1. Basis-of-Design Product: ASI signage notations “in touch”.
2. Laminated-Sheet Sign: Photopolymer face sheet with raised graphics laminated to acrylic backing sheet to produce composite sheet.

   a. Composite-Sheet Thickness: Manufacturer's standard for size of sign.
   b. Surface-Applied Graphics: Applied vinyl film.
   c. Color(s): As selected by Architect from manufacturer's full range.

3. Sign-Panel Perimeter: Finish edges smooth.

   a. Edge Condition: Square cut.
   b. Corner Condition in Elevation: Square.

4. Mounting: Manufacturer's standard method for substrates indicated with concealed anchors.

2.2 PANEL-SIGN MATERIALS

A. Acrylic Sheet: ASTM D 4802, Type UVF (UV filtering).

B. Polycarbonate Sheet: Coated, mar-resistant, UV-stabilized polycarbonate, with coating on both sides.

C. Vinyl Film: UV-resistant vinyl film of nominal thickness indicated, with pressure-sensitive, permanent adhesive on back; die cut to form characters or images as indicated and suitable for exterior applications.

2.3 ACCESSORIES

A. Fasteners and Anchors: Manufacturer's standard as required for secure anchorage of signage, noncorrosive and compatible with each material joined, and complying with the following:

1. Use concealed fasteners and anchors unless indicated to be exposed.

2. Sign Mounting Fasteners:

B. Adhesives: As recommended by sign manufacturer and with a VOC content of 70 g/L or less for adhesives used inside the weatherproofing system and applied on-site when calculated according to 40 CFR 59, Subpart D (EPA Method 24).

C. Two-Face Tape: Manufacturer's standard high-bond, foam-core tape, 0.045 inch thick, with adhesive on both sides.

D. Bituminous Paint: Cold-applied asphalt emulsion complying with ASTM D 1187.

2.4 FABRICATION

A. General: Provide manufacturer's standard sign assemblies according to requirements indicated.

1. Mill joints to a tight, hairline fit. Form assemblies and joints exposed to weather to resist water penetration and retention.
2. Provide welds and brazes behind finished surfaces without distorting or discoloring exposed side. Clean exposed welded and brazed connections of flux, and dress exposed and contact surfaces.
3. Conceal connections if possible; otherwise, locate connections where they are inconspicuous.
4. Internally brace signs for stability and for securing fasteners.
5. Provide rebates, lugs, and brackets necessary to assemble components and to attach to existing work. Drill and tap for required fasteners. Use concealed fasteners where possible; use exposed fasteners that match sign finish.

B. Surface-Engraved Graphics: Machine engrave characters and other graphic devices into panel surface indicated to produce precisely formed copy, incised to uniform depth.
1. Engraved Opaque Acrylic Sheet: Fill engraved graphics with manufacturer's standard enamel.
2. Face-Engraved Clear Acrylic Sheet: Fill engraved copy with manufacturer's standard enamel. Apply manufacturer's standard opaque background color coating to back face of acrylic sheet.

C. Shop- and Subsurface-Applied Vinyl: Align vinyl film in final position and apply to surface. Firmly press film from the middle outward to obtain good bond without blisters or fishmouths.

D. Brackets: Fabricate brackets, fittings, and hardware for bracket-mounted signs to suit sign construction and mounting conditions indicated. Modify manufacturer's standard brackets as required.

1. Aluminum Brackets: Factory finish brackets with baked-enamel or powder-coat finish to match sign-background color unless otherwise indicated.

2.5 SCHEDULE

A. Provide signage for the following rooms and spaces.

1. Art Room 001

2. Electrical Closet 002

3. Women’s Restroom 004

4. Men’s Restroom 006

5. Program Room B 008

6. Program Room A 009

7. Storage 010

8. Mechanical Room 012

9. Elevator (all three stops)

10. Family Toilet 114

11. Sand Porch (2 signs)

12. Office 118

13. Toilet 211

PART 3 - EXECUTION

3.1 INSTALLATION

A. General: Install signs using mounting methods indicated and according to manufacturer's written instructions.

1. Install signs level, plumb, true to line, and at locations and heights indicated, with sign surfaces free of distortion and other defects in appearance.
2. Install signs so they do not protrude or obstruct according to the accessibility standard.
3. Before installation, verify that sign surfaces are clean and free of materials or debris that would impair installation.
4. Corrosion Protection: Coat concealed surfaces of exterior aluminum in contact with grout, concrete, masonry, wood, or dissimilar metals, with a heavy coat of bituminous paint.

B. Mounting Methods:

a. Masonry Substrates: Fill holes with adhesive. Leave recess space in hole for displaced adhesive. Place sign in position and push until flush to surface, embedding studs in holes. Temporarily support sign in position until adhesive fully sets.
b. Thin or Hollow Surfaces: Place sign in position and flush to surface, install washers and nuts on studs projecting through opposite side of surface, and tighten.

2. Adhesive: Clean bond-breaking materials from substrate surface and remove loose debris. Apply linear beads or spots of adhesive symmetrically to back of sign and of suitable quantity to support weight of sign after cure without slippage. Keep adhesive away from edges to prevent adhesive extrusion as sign is applied and to prevent visibility of cured adhesive at sign edges. Place sign in position, and push to engage adhesive. Temporarily support sign in position until adhesive fully sets.
3. Two-Face Tape: Clean bond-breaking materials from substrate surface and remove loose debris. Apply tape strips symmetrically to back of sign and of suitable quantity to support weight of sign without slippage. Keep strips away from edges to prevent visibility at sign edges. Place sign in position, and push to engage tape adhesive.

C. Remove temporary protective coverings and strippable films as signs are installed.

END OF SECTION 101423

SECTION 102113.19 - PLASTIC TOILET COMPARTMENTS

PART 1 - GENERAL

1.1 SUMMARY

A. Section includes solid-plastic toilet compartments configured as toilet enclosures and urinal screens.

1.2 ACTION SUBMITTALS

A. Product Data: For each type of product.

B. Shop Drawings: For toilet compartments. Include plans, elevations, sections, details, and attachment details.

C. Samples for each type of toilet compartment material indicated.

1.3 INFORMATIONAL SUBMITTALS

A. Product certificates.

1.4 CLOSEOUT SUBMITTALS

A. Maintenance data.

PART 2 - PRODUCTS

2.1 PERFORMANCE REQUIREMENTS

A. Surface-Burning Characteristics: Comply with ASTM E 84; testing by a qualified testing agency. Identify products with appropriate markings of applicable testing agency.
1. Flame-Spread Index: 25 or less.
2. Smoke-Developed Index: 450 or less.

B. Regulatory Requirements: Comply with applicable provisions in the U.S. Architectural & Transportation Barriers Compliance Board's ADA-ABA Accessibility Guidelines for Buildings and Facilities and ICC A117.1 for toilet compartments designated as accessible.

2.2 SOLID-PLASTIC TOILET COMPARTMENTS

A. Manufacturers:
1. Accurate Partitions Corporation.
2. Bradley Corporation.
3. General Partitions Mfg. Corp.
4. Global Products; ASI Group.
5. Scranton Products.

B. Toilet-Enclosure Style: Ceiling hung.

C. Urinal-Screen Style: Wall hung.

D. Door, Panel and Pilaster Construction: Solid, high-density polyethylene (HDPE) panel material, not less than 1 inch thick, seamless, with eased edges and with homogenous color and pattern throughout thickness of material.
   1. Integral Hinges: Configure doors and pilasters to receive integral hinges.
   2. Heat-Sink Strip: Manufacturer's standard continuous, extruded-aluminum or stainless-steel strip fastened to exposed bottom edges of solid-plastic components to hinder malicious combustion.
   3. Color and Pattern: One color and pattern in each room as selected by Architect from manufacturer's full range.

E. Pilaster Shoes and Sleeves (Caps): Manufacturer's standard design; stainless steel.

F. Brackets (Fittings):
   1. Full-Height (Continuous) Type: Manufacturer's standard design; extruded aluminum or stainless steel.

G. Overhead Cross Bracing for Ceiling-Hung Units: As recommended by manufacturer and fabricated from solid polymer.

2.3 HARDWARE AND ACCESSORIES

A. Hardware and Accessories: Manufacturer's standard operating hardware and accessories.
   1. Material: Clear-anodized aluminum or Stainless steel.
   2. Provide units that comply with regulatory requirements for accessibility at compartments designated as accessible.

B. Anchorages and Fasteners: Manufacturer's standard exposed fasteners of stainless steel, finished to match the items they are securing, with theft-resistant-type heads. Provide sex-type bolts for through-bolt applications. For concealed anchors, use stainless-steel, hot-dip galvanized-steel, or other rust-resistant, protective-coated steel compatible with related materials.

2.4 FABRICATION

A. Fabrication, General: Fabricate toilet compartment components to sizes indicated. Coordinate requirements and provide cutouts for through-partition toilet accessories where required for attachment of toilet accessories.

B. Ceiling-Hung Units: Provide manufacturer's standard corrosion-resistant anchoring assemblies with leveling adjustment nuts at pilasters for connection to structural support above finished ceiling. Provide assemblies that support pilasters from structure without transmitting load to finished ceiling. Provide sleeves (caps) at tops of pilasters to conceal anchorage.

C. Door Size and Swings: Unless otherwise indicated, provide 24-inch-wide, in-swinging doors for standard toilet compartments and 36-inch-wide, out-swinging doors with a minimum 32-inch- wide, clear opening for compartments designated as accessible.

PART 3 - EXECUTION

3.1 INSTALLATION

A. General: Comply with manufacturer's written installation instructions. Install units rigid, straight, level, and plumb. Secure units in position with manufacturer's recommended anchoring devices.
   1. Maximum Clearances:
      a. Pilasters and Panels: 1/2 inch.
      b. Panels and Walls: 1 inch.
   2. Full-Height (Continuous) Brackets: Secure panels to walls and to pilasters with full-height brackets.
      a. Locate bracket fasteners so holes for wall anchors occur in masonry or tile joints.
      b. Align brackets at pilasters with brackets at walls.

3.2 ADJUSTING

A. Hardware Adjustment: Adjust and lubricate hardware according to hardware manufacturer's written instructions for proper operation. Set hinges on in-swinging doors to hold doors open approximately 30 degrees from closed position when unlatched. Set hinges on out-swinging doors to return doors to fully closed position.

END OF SECTION 102113.19

SECTION 102600 - WALL AND DOOR PROTECTION

PART 1 - GENERAL

1.1 SUMMARY

A. Section Includes:
   1. Corner guards.

B. Related Requirements:
   1. Section 087100 "Door Hardware" for metal protective trim units, according to BHMA A156.6, used for armor, kick, mop, and push plates.

1.2 ACTION SUBMITTALS

A. Product Data: For each type of product.

B. Shop Drawings: For each type of wall and door protection showing locations and extent.
   1. Include plans, elevations, sections, and attachment details.

C. Samples: For each exposed product and for each color and texture specified, 12 inches long.

1.3 INFORMATIONAL SUBMITTALS

A. Product certificates.

B. Material certificates.

C. Sample warranty.

1.4 CLOSEOUT SUBMITTALS

A. Maintenance data.

1.5 WARRANTY

A. Special Warranty: Manufacturer agrees to repair or replace components of wall- and door-protection units that fail in materials or workmanship within specified warranty period.
   1. Warranty Period: Five years from date of Substantial Completion.

PART 2 - PRODUCTS

2.1 PERFORMANCE REQUIREMENTS

A. Surface Burning Characteristics: Comply with ASTM E 84 or UL 723; testing by a qualified testing agency. Identify products with appropriate markings of applicable testing agency.
   1. Flame-Spread Index: 25 or less.
   2. Smoke-Developed Index: 450 or less.

B. Regulatory Requirements: Comply with applicable provisions in the U.S. Architectural & Transportation Barriers Compliance Board's ADA-ABA Accessibility Guidelines for Buildings and Facilities and ICC A117.1.

2.2 CORNER GUARDS

A. Surface-Mounted, Plastic-Cover Corner Guards: Manufacturer's standard, PVC-free assembly consisting of snap-on, resilient plastic cover installed over retainer; including mounting hardware; fabricated with 90- or 135-degree turn to match wall condition.
   1. Manufacturers:
      a. Construction Specialties Inc.
      b. InPro Corporation (PC).
      c. JL Industries, Inc; a division of Activar Construction Products Group.
   2. Cover: Extruded rigid plastic, minimum 0.078-inch wall thickness; in dimensions and profiles indicated on Drawings.
      a. Color and Texture: As selected by Architect from manufacturer's full range.
   3. Continuous Retainer: Minimum 0.060-inch- thick, one-piece, extruded aluminum.
   4. Retainer Clips: Manufacturer's standard impact-absorbing clips.
   5. Top and Bottom Caps: Prefabricated, injection-molded plastic; color matching cover; field adjustable for close alignment with snap-on cover.

B. Surface-Mounted, Opaque-Plastic Corner Guards: Fabricated as one piece from PVC-free plastic; with formed edges; fabricated with 90- or 135-degree turn to match wall condition.
   1. Manufacturers:
      a. Construction Specialties Inc.
      b. InPro Corporations (IPC).
   2. Mounting: Adhesive.
   3. Color and Texture: As selected by Architect from manufacturer's full range.

2.3 MATERIALS

A. Plastic Materials: Chemical- and stain-resistant, high-impact-resistant plastic with integral color throughout; extruded and sheet material as required, thickness as indicated.

B. Fasteners: Aluminum, nonmagnetic stainless-steel, or other noncorrosive metal screws, bolts, and other fasteners compatible with items being fastened. Use security-type fasteners where exposed to view.

C. Adhesive: As recommended by protection-product manufacturer and with a VOC content of 70 g/L or less.

PART 3 - EXECUTION

3.1 INSTALLATION

A. Installation Quality: Install wall and door protection according to manufacturer's written instructions, level, plumb, and true to line

without distortions. Do not use materials with chips, cracks, voids, stains, or other defects that might be visible in the finished Work.

B. Mounting Heights: Install wall and door protection in locations and at mounting heights indicated on Drawings.

C. Accessories: Provide splices, mounting hardware, anchors, trim, joint moldings, and other accessories required for a complete installation.
   1. Provide anchoring devices and suitable locations to withstand imposed loads.
   2. Where splices occur in horizontal runs of more than 20 feet, splice aluminum retainers and plastic covers at different locations along the run, but no closer than 12 inches apart.
   3. Adjust end and top caps as required to ensure tight seams.

END OF SECTION 102600

SECTION 102800 - TOILET, BATH, AND LAUNDRY ACCESSORIES

PART 1 - GENERAL

1.1 RELATED DOCUMENTS

A. Drawings and general provisions of the Contract, including General and Supplementary Conditions and Division 01 Specification Sections, apply to this Section.

1.2 SUMMARY

A. Section Includes:
1. Public-use washroom accessories.
2. Warm-air dryers.
3. Childcare accessories.

1.3 ACTION SUBMITTALS

A. Product Data: For each type of product indicated. Include the following:
1. Construction details and dimensions.
2. Anchoring and mounting requirements, including requirements for cutouts in other work and substrate preparation.
3. Material and finish descriptions.
4. Manufacturer's warranty.

B. Product Schedule: Indicating types, quantities, sizes, and installation locations by room of each accessory required.
1. Identify locations using room designations indicated.
2. Identify products using designations indicated.

1.4 CLOSEOUT SUBMITTALS

A. Maintenance Data: For toilet and bath accessories to include in maintenance manuals.

1.5 QUALITY ASSURANCE

A. Source Limitations: For products listed together in the same Part 2 articles, obtain products from single source from single manufacturer.

B. Electrical Components, Devices, and Accessories: Listed and labeled as defined in NFPA 70, by a qualified testing agency, and marked for intended location and application.

1.6 COORDINATION

A. Coordinate accessory locations with other work to prevent interference with clearances required for access by people with disabilities, and for proper installation, adjustment, operation, cleaning, and servicing of accessories.

B. Deliver inserts and anchoring devices set into concrete or masonry as required to prevent delaying the Work.

1.7 WARRANTY

A. Special Mirror Warranty: Manufacturer's standard form in which manufacturer agrees to replace mirrors that develop visible silver spoilage defects and that fail in materials or workmanship within specified warranty period.
   1. Warranty Period: Fifteen years from date of Substantial Completion.

PART 2 - PRODUCTS

2.1 MATERIALS

A. Stainless Steel: ASTM A 666, Type 304, 0.031-inch minimum nominal thickness unless otherwise indicated.

B. Steel Sheet: ASTM A 1008/A 1008M, Designation CS (cold rolled, commercial steel), 0.036-inch minimum nominal thickness.

C. Galvanized-Steel Mounting Devices: ASTM A 153/A 153M, hot-dip galvanized after fabrication.

D. Fasteners: Screws, bolts, and other devices of same material as accessory unit and tamper-and-theft resistant where exposed, and of galvanized steel where concealed.

E. Mirrors: ASTM C 1503, Mirror Glazing Quality, clear-glass mirrors, nominal 6.0 mm thick.

2.2 PUBLIC-USE WASHROOM ACCESSORIES

A. Basis-of-Design Product: Subject to compliance with requirements, provide product indicated or comparable product by one of the following:
   1. A & J Washroom Accessories, Inc.
   2. American Specialties, Inc.
   3. Bobrick Washroom Equipment, Inc.
   4. Bradley Corporation.
   5. GAMCO Specialty Accessories; a division of Bobrick Washroom Equipment, Inc.
   6. Tubular Specialties Manufacturing, Inc.

B. Toilet Tissue (Jumbo-Roll) Dispenser:
   1. Basis-of-Design Product: Kimberly Clark, Model 09601.
   2. Description: Two-roll unit with sliding panel to expose other roll.
   3. Mounting: Surface mounted.
   4. Capacity: 9-inch diameter rolls.
   5. Material and Finish: Stainless steel, No. 4 finish (satin).
   6. Lockset: Tumbler type.
   7. Refill Indicator: Pierced slots at front.

C. Paper Towel (Roll) Dispenser:
   1. Basis-of-Design Product: MOD Dispenser, Model 34358.
   2. Description: Dispenser advances and cuts a nominal 11.75 inches of towel when activated.
   3. Mounting: Semirecessed.
   4. Minimum Capacity: 8-inch-wide, 700-foot or 1150-foot.
   5. Material and Finish: Stainless steel, No. 4 finish (satin).
   6. Lockset: Tumbler type.

D. Liquid-Soap Dispenser:

   1. Basis-of-Design Product: Bradley, Model 6562.
   2. Description: Designed for dispensing soap in liquid form.
   3. Mounting: Vertically oriented, surface mounted.
   4. Capacity: 40 **oz.**
   5. Refill Indicator: Window type.

E. Grab Bar:
   1. Basis-of-Design Product: Bradley, Model 812-7.
   2. Mounting: Flanges with concealed fasteners.
   3. Material: Stainless steel, 0.05 inch thick.
      a. Finish: Smooth, No. 4 finish (satin) on ends and slip-resistant texture in grip area.
   4. Outside Diameter: 1-1/2 inches.
   5. Configuration and Length: As indicated on Drawings.

F. Sanitary-Napkin Disposal Unit:
   1. Basis-of-Design Product: Bobrick, Model B-35303.
   2. Mounting: Recessed.
   3. Door or Cover: Self-closing, disposal-opening cover and hinged face panel.
   4. Receptacle: Removable.
   5. Material and Finish: Stainless steel, No. 4 finish (satin).

G. Seat-Cover Dispenser:
   1. Basis-of-Design Product: Bobrick Model B-3013.
   2. Mounting: Recessed.
   3. Minimum Capacity: 500 seat covers.
   4. Exposed Material and Finish: Stainless steel, No. 4 finish (satin).
   5. Lockset: Tumbler type.

H. Fold-Down Purse Shelf:
   1. Basis-of-Design Product:

2. Description: Hinged unit with spring-loaded shelf that automatically returns to vertical position.
3. Nominal Size: 15 inches long by 5-1/2 inches wide.
4. Material and Finish: Chrome-plated, cast-zinc alloy (zamac) with stippled finish on tray or stainless steel, No. 4 finish (satin).

I. Mirror Unit:
1. Basis-of-Design Product: Bradley, Model 781.
2. Frame: Stainless-steel channel.
3. Size: As indicated on Drawings.

J. Robe Hook:
1. Basis-of-Design Product: Bradley, Model 9114.
2. Description: Single-prong unit.
3. Material and Finish: Stainless steel, No. 4 finish (satin)] [Stainless steel, No. 7 finish (polished).

2.3 WARM-AIR DRYERS

A. Basis-of-Design Product: Subject to compliance with requirements, provide product indicated or comparable product by one of the following:
1. A & J Washroom Accessories, Inc.
2. American Dryer, Inc.
3. American Specialties, Inc.
4. Bobrick Washroom Equipment, Inc.
5. Bradley Corporation.
6. Excel Dryer Corporation.
7. GAMCO Specialty Accessories; a division of Bobrick Washroom Equipment, Inc.
8. Tubular Specialties Manufacturing, Inc.
9. World Dryer Corporation.

B. Warm-Air Dryer:
1. Basis-of-Design Product: Dyson Airblade AB04.
2. Mounting: Surface mounted.
3. Operation: Touch-free infa-red activation.
   a. Hand Dry Time: 12 seconds.
4. Cover Material and Finish: Polycarbonate-ABS casing. 110-120v AC, 50 H_2, rated power 1400 w, Dyson digital motor, switched reluctance brushless, motor speed 81,000 rpm.

2.4 CHILDCARE ACCESSORIES

A. Basis-of-Design Product: Subject to compliance with requirements, provide product indicated or comparable product by one of the following:
1. American Specialties, Inc.
2. Brocar Products, Inc.
3. Diaper Deck & Company, Inc.
4. GAMCO Specialty Accessories; a division of Bobrick Washroom Equipment, Inc.

5. Koala Kare Products; a division of Bobrick Washroom Equipment, Inc.
6. SSC, Inc.
7. Tubular Specialties Manufacturing, Inc.

B. Diaper-Changing Station:
1. Basis-of-Design Product: Koala Kare Products, Model KB100-00.
2. Description: Horizontal unit that opens by folding down from stored position and with child-protection strap.
   a. Engineered to support a minimum of 250-lb static load when opened.
3. Mounting: Surface mounted, with unit projecting not more than 4 inches from wall when closed.
4. Operation: By pneumatic shock-absorbing mechanism.
5. Material and Finish: HDPE in manufacturer's standard color.
6. Liner Dispenser: Built in.

C. Child-Protection Seat:
1. Basis-of-Design Product: Koala Kare Products.
2. Description: Unit that opens by folding down from stored position and with child-protection strap.
   a. Engineered to support a minimum of 150-lb static load when opened.
3. Mounting: Surface mounted, with unit projecting not more than 6 inches from wall when closed.
4. Material and Finish: HDPE in manufacturer's standard color.

2.5 FABRICATION

A. General: Fabricate units with tight seams and joints, and exposed edges rolled. Hang doors and access panels with full-length, continuous hinges. Equip units for concealed anchorage and with corrosion-resistant backing plates.

B. Keys: Provide universal keys for internal access to accessories for servicing and resupplying. Provide minimum of six keys to Owner's representative.

PART 3 - EXECUTION

3.1 INSTALLATION

A. Install accessories according to manufacturers' written instructions, using fasteners appropriate to substrate indicated and recommended by unit manufacturer. Install units level, plumb, and firmly anchored in locations and at heights indicated.

B. Grab Bars: Install to withstand a downward load of at least 250 lbf, when tested according to ASTM F 446.

3.2 ADJUSTING AND CLEANING

A. Adjust accessories for unencumbered, smooth operation. Replace damaged or defective items.

B. Remove temporary labels and protective coatings.

C. Clean and polish exposed surfaces according to manufacturer's written recommendations.

END OF SECTION 102800

SECTION 104413 - FIRE PROTECTION CABINETS

PART 1 - GENERAL

1.1 SUMMARY

A. Section includes fire-protection cabinets for portable fire extinguishers.

1.2 ACTION SUBMITTALS

A. Product Data: For each type of product.

B. Shop Drawings: For fire-protection cabinets.

1.3 CLOSEOUT SUBMITTALS

A. Maintenance data.

1.4 COORDINATION

A. Coordinate size of fire-protection cabinets to ensure that type and capacity of fire extinguishers indicated are accommodated.

B. Coordinate sizes and locations of fire-protection cabinets with wall depths.

PART 2 - PRODUCTS

2.1 PERFORMANCE REQUIREMENTS

A. Fire-Rated Fire-Protection Cabinets: Listed and labeled to comply with requirements in ASTM E 814 for fire-resistance rating of walls where they are installed.

2.2 FIRE-PROTECTION CABINET

A. Cabinet Type: Suitable for fire extinguisher.
1. American Specialties, Inc.
2. Fire-End & Crocker Corporation.
3. GMR International Equipment Corporation.
4. Guardian Fire Equipment, Inc.
5. JL Industries, Inc., a division of the Activar Construction Products Group.
6. Kidde Residential and Commercial Division.
7. Larsens Manufacturing Company.
8. Modern Metal Products; Division of Technico Inc.
9. Moon American.
10. Nystrom, Inc.
11. Potter Roemer LLC.
12. Strike First Corporation of American.

B. Cabinet Construction: Nonrated U.O.N. on plan in fire rated wall construction.

1. Fire-Rated Cabinets: Construct fire-rated cabinets with double walls fabricated from 0.043-inch- thick cold-rolled steel sheet lined with minimum 5/8-inch- thick fire-barrier material. Provide factory-drilled mounting holes.

C. Cabinet Material: Aluminum sheet.

D. Semirecessed Cabinet: One-piece combination trim and perimeter door frame overlapping surrounding wall surface with exposed trim face and wall return at outer edge (backbend).
1. Rolled-Edge Trim: 2-1/2-inch backbend depth.

E. Cabinet Trim Material: Extruded-aluminum shapes.

F. Door Material: Extruded-aluminum shapes.

G. Door Style: Vertical duo panel with frame.

H. Door Glazing: Tempered float glass (clear).

I. Door Hardware: Manufacturer's standard door-operating hardware of proper type for cabinet type, trim style, and door material and style indicated.

J. Accessories:
1. Door Lock: Cam lock that allows door to be opened during emergency by pulling sharply on door handle.
2. Identification: Lettering complying with authorities having jurisdiction for letter style, size, spacing, and location. Locate as indicated.
a. Identify fire extinguisher in fire-protection cabinet with the words "FIRE EXTINGUISHER".
1) Location: Applied to cabinet door.
2) Application Process: Pressure-sensitive vinyl letters.
3) Lettering Color: Red.
4) Orientation: Vertical.

K. Materials:
1. Aluminum: ASTM B 221, with strength and durability characteristics of not less than Alloy 6063-T5 for aluminum sheet. ASTM B 221 for extruded shapes.
a. Finish: Clear anodic.
2. Tempered Float Glass: ASTM C 1048, Kind FT, Condition A, Type I, Quality q3, 3 mm thick, Class 1 (clear).

2.3 FABRICATION

A. Fire-Protection Cabinets: Provide manufacturer's standard box (tub) with trim, frame, door, and hardware to suit cabinet type, trim style, and door style indicated.

PART 3 - EXECUTION

3.1 INSTALLATION

A. Prepare recesses for semirecessed fire-protection cabinets as required by type and size of cabinet and trim style.

B. Install fire-protection cabinets in locations and at mounting heights indicated or, if not indicated, at heights acceptable to authorities having jurisdiction.

C. Fire-Protection Cabinets: Fasten cabinets to structure, square and plumb.

D. Identification: Apply vinyl lettering at locations indicated.

E. Adjust fire-protection cabinet doors to operate easily without binding. Verify that integral locking devices operate properly.

END OF SECTION 104413

SECTION 104416 - FIRE EXTINGUISHERS

PART 1 - GENERAL

1.1 SUMMARY

A. Section includes portable, hand-carried fire extinguishers and mounting brackets for fire extinguishers.

1.2 ACTION SUBMITTALS

A. Product Data: For each type of product.

1.3 INFORMATIONAL SUBMITTALS

A. Warranty: Sample of special warranty.

1.4 CLOSEOUT SUBMITTALS

A. Operation and maintenance data.

1.5 COORDINATION

A. Coordinate type and capacity of fire extinguishers with fire-protection cabinets to ensure fit and function.

1.6 WARRANTY

A. Special Warranty: Manufacturer's standard form in which manufacturer agrees to repair or replace fire extinguishers that fail in materials or workmanship within specified warranty period.
   1. Warranty Period: Six years from date of Substantial Completion.

PART 2 - PRODUCTS

2.1 PERFORMANCE REQUIREMENTS

A. NFPA Compliance: Fabricate and label fire extinguishers to comply with NFPA 10, "Portable Fire Extinguishers."

B. Fire Extinguishers: Listed and labeled for type, rating, and classification by an independent testing agency acceptable to authorities having jurisdiction.

2.2 PORTABLE, HAND-CARRIED FIRE EXTINGUISHERS

A. Fire Extinguishers: Type, size, and capacity for each fire-protection cabinet and mounting bracket indicated.
   1. Amerex Corporation.
   2. Ansul Incorporated; Tyco International.
   3. Badgar Fire Protection.
   4. Buckeye Fire Equipment Company.
   5. Fire-End & Crocker Corporation.
   6. Guardian Fire Equipment, Inc.

7. JL Industries, Inc., a division of the Activar Construction Products Group.
8. Kidde Residential and Commercial Division.
9. Larsens Manufacturing Company.
10. Moon American.
11. Nystrom, Inc.
12. Pem All Fire Extinguisher Corp; Pen Systems, Inc.
13. Potter Roemer LLC.
14. Pyro-Chem; Tyco Fire Suppression & Building Products.
15. Strike First Corporation of American.
16. Instruction Labels: Include pictorial marking system complying with NFPA 10, Appendix B, and bar coding for documenting fire-extinguisher location, inspections, maintenance, and recharging.

B. Multipurpose Dry-Chemical Type: UL-rated 5-16 nominal capacity, with monoammonium phosphate-based dry chemical in manufacturer's standard enameled container.

2.3 MOUNTING BRACKETS <Insert drawing designation>

A. Mounting Brackets: Manufacturer's standard steel, designed to secure fire extinguisher to wall or structure, of sizes required for types and capacities of fire extinguishers indicated, with plated or black baked-enamel finish.
1. Amerex Corporation.
2. Ansul Incorporated; Tyco International.
3. Badgar Fire Protection.
4. Buckeye Fire Equipment Company.
5. Fire-End & Crocker Corporation.
6. Guardian Fire Equipment, Inc.
7. JL Industries, Inc., a division of the Activar Construction Products Group.
8. Larsens Manufacturing Company.
9. Nystrom, Inc.
10. Potter Roemer LLC.
11. Strike First Corporation of American.

B. Identification: Lettering complying with authorities having jurisdiction for letter style, size, spacing, and location. Locate as indicated by Architect.
1. Identify bracket-mounted fire extinguishers with the words "FIRE EXTINGUISHER" in red letter decals applied to mounting surface.
a. Orientation: Vertical.

PART 3 - EXECUTION

3.1 INSTALLATION

A. Examine fire extinguishers for proper charging and tagging.
1. Remove and replace damaged, defective, or undercharged fire extinguishers.

B. Install fire extinguishers and mounting brackets in locations indicated and in compliance with requirements of authorities having jurisdiction.

1. Mounting Brackets: 54 inches above finished floor to top of fire extinguisher.

C. Mounting Brackets: Fasten mounting brackets to surfaces, square and plumb, at locations indicated.

END OF SECTION 104416

SECTION 123661 - SIMULATED STONE COUNTERTOPS

PART 1 - GENERAL

1.1 SUMMARY

A. Section Includes:
   1. Solid-surface-material countertops and backsplashes.

1.2 ACTION SUBMITTALS

A. Product Data: For countertop materials and sinks.

B. Shop Drawings: For countertops. Show materials, finishes, edge and backsplash profiles, methods of joining, and cutouts for plumbing fixtures.

C. Samples: For each type of material exposed to view.

PART 2 - PRODUCTS

2.1 SOLID-SURFACE-MATERIAL COUNTERTOPS

A. Configuration: Provide countertops with the following front and backsplash style:
   1. Front: Indicated on Drawings.
   2. Backsplash: Radius edge with 3/8-inch radius.
   3. Endsplash: Matching backsplash.

B. Countertops: 3/4-inch- thick, solid surface material with front edge built up with same material].

C. Backsplashes: 1/2-inch- thick, solid surface material.

2.2 COUNTERTOP MATERIALS

A. Particleboard: ANSI A208.1, Grade M-2-Exterior Glue, made with binder containing no urea formaldehyde.

B. Plywood: Exterior softwood plywood complying with DOC PS 1, Grade C-C Plugged, touch sanded.

C. Adhesives: Adhesives shall comply with the testing and product requirements of the California Department of Health Services' "Standard Practice for the Testing of Volatile Organic Emissions from Various Sources Using Small-Scale Environmental Chambers."

D. Solid Surface Material: Homogeneous solid sheets of filled plastic resin complying with ANSI SS1.
   1. Manufacturers: Subject to compliance with requirements, provide products by one of the following:
      a. Avonite Surfaces.
      b. Corian.
      c. Formica Corporation.
      d. LG Chemical, Ltd., Hi-macs.

e. Meganite Inc.
f. Wilsonart International.

2. Type: Provide Standard Type unless Special Purpose Type is indicated.
3. Integral Sink Bowls: Comply with ISSFA-2 and ANSI Z124.3, Type 5 or Type 6, without a precoated finish.
4. Colors and Patterns: As selected by Architect from manufacturer's full range.

PART 3 - EXECUTION

3.1 INSTALLATION

A. Fasten countertops by screwing through corner blocks of base units into underside of countertop. Align adjacent surfaces and, using adhesive in color to match countertop, form seams to comply with manufacturer's written instructions. Carefully dress joints smooth, remove surface scratches, and clean entire surface.

END OF SECTION 123661

SECTION 142100 - ELECTRIC TRACTION ELEVATORS

PART 1 GENERAL

1.01 SUMMARY

A. Section Includes: Electric Traction Elevators.

B. Products Supplied But Not Installed Under this Section:
1. Hoist Beam
2. Pit Ladder
3. Inserts mounted in block walls for rail attachments

C. Work Supplied Under Other Sections:
1. Temporary lighting, including temporary lighting in hoistway for machine space with switch located in hoistway on the strike jamb side of top landing door.
2. Hoistway ventilation shall be in accordance with local and national building code requirements.
3. Guide Rail Support shall be structurally adequate to extend from pit floor to top of hoistway, with spans in accordance with requirements of authority having jurisdiction and final layouts.
4. Removable barricades at all hoistway openings, in compliance with OSHA 29 CFR 1926.502 in addition to any local code requirements.
5. Lifeline attachments capable of withstanding 5000 lb load in accordance with OSHA 29 CFR 1926.502. Provide a minimum of 2 at the top, front of each hoistway.
6. Pit lighting: Fixture with switch and guards. Provide illumination level equal to or greater than that required by ASME A17.1/CSA B44 2000, or applicable version.
7. Control space lighting with switch. Coordinate switch with lighting for machine space as allowable by code.
8. Access Doors: As required for access to governor. Access door shall be self-closing, self-locking if necessary and operable from the inside without a key.

D. Related sections:
1. Section 015000 - Temporary Facilities and Controls
2. Section 033000 - Cast-in-Place Concrete:
3. Section 042000 - Unit Masonry
4. Section 055000 - Metal Fabrications
5. Section 230000 - Heating, Ventilating, and Air Conditioning
6. Section 260000 - Electrical
7. Section 283100 - Fire Detection and Alarm

E. Industry and government standards:
1. ICC/ANSI A117.1 Accessible and Usable Buildings and Facilities
2. ADAAG - Accessibility Guidelines for Buildings and Facilities
3. ANSI/NFPA 70, National Electrical Code
4. ANSI/NFPA 80, Standard for Fire Doors and Fire Windows
5. ASME/ANSI A17.1, Safety Code for Elevators and Escalators.
6. Illinois Accessibility Code 1997

1.02 DESCRIPTION OF ELEVATOR

A. Elevator Equipment: KONE EcoSpace™ gearless traction elevator

B. Equipment Control: KCM831

C. Drive: Non-Regenerative

D. Quantity of Elevators: 1

E. Landings: 3

F. Openings: 2 Front Openings, 1 Back Openings

G. Travel: 23'-9" (Contractor to verify)

H. Rated Capacity: 2500 lbs (1134 kg)

I. Rated Speed: 150 fpm

J. Clear Inside Dimensions (W x D): 6'-8" x 4'-3"

K. Cab Height: 8'

L. Clear height under suspended ceiling: 7'-7"

M. Entrance Width & Type: 3'-6" & Front/Back Right Opening

N. Entrance Height: 7'

O. Main Power Supply: 208 Volts + 5%, three-phase

P. Operation: Simplex

Q. Machine Location: Inside the hoistway mounted on car guide rail

R. Control Space Location: Integral Closet at top landing.

S. Elevator Equipment shall conform to the requirements of seismic zone: Non-Seismic

T. Maintenance Service Period: 12 Months

1.03 PERFORMANCE REQUIREMENTS

A. Car Performance
   1. Car Speed ± 5% of contract speed under any loading condition or direction of travel.
   2. Car Capacity: Safely lower, stop and hold (per code) up to 125% of rated load.

B. System Performance
   1. Vertical Vibration (maximum): 25 mg
   2. Horizontal Vibration (maximum): 25 mg
   3. Jerk Rate (maximum): 3.3 ft/sec3
   4. Acceleration (maximum) 1.3 ft/sec2
   5. In Car Noise: = 55 dB(A)
   6. Leveling Accuracy: ±0.2 inches

7. Starts per hour (maximum): 120

1.04 SUBMITTALS

A. Product Data: Submit manufacturer's product literature for each proposed system.
   1. Cab design, dimensions and layout.
   2. Layout, finishes, and accessories and available options.
   3. Controls, signals and operating system.
   4. Color selection charts for cab and entrances.

B. Shop Drawings:
   1. Clearances and travel of car.
   2. Clear inside hoistway and pit dimensions.
   3. Location and layout of equipment and signals.
   4. Car, guide rails, buffers and other components in hoistway.
   5. Maximum rail bracket spacing.
   6. Maximum loads imposed on building structure.
   7. Hoist beam requirements.
   8. Location and sizes of access doors.
   9. Location and details of hoistway door and frames.
   10. Electrical characteristics and connection requirements.

C. Operation and maintenance data:
   1. Provide manufacturer's emergency, maintenance, and operation manuals.

D. Diagnostic Tools
   1. Prior to seeking final acceptance for the completed project as specified by the Contract Documents, the Elevator Contractor shall deliver to the Owner any specialized tool(s) that may be required to perform diagnostic evaluations, adjustments, and/or parametric software changes and/or test and inspections on any piece of control or monitoring equipment installed. This shall include any specialized tool(s) required for monitoring, inspection and/or maintenance where the means of suspension other than conventional wire ropes are furnished and installed by the Elevator Contractor. Any and all such tool(s) shall become property of the Owner. Any diagnostic tool provided to the Owner by the Elevator Contractor shall be configured to perform all levels of diagnostics, systems adjustment and parametric software changes which are available to the Elevator Contractor. In those cases where diagnostic tools provided to the Owner require periodic recalibration/or re-initiation, the Elevator Contractor shall perform such tasks at no additional cost to the Owner for a period equal to the term of the maintenance agreement from the date of final acceptance of the competed project During those intervals in which the Owner might find it necessary to surrender a diagnostic tool for re-calibration, re-initiation, or repair, the Elevator Contractor shall provide a temporary replacement for the tool at no additional cost to the Owner. The Elevator Contractor shall deliver to the Owner, printed instructions for the proper use of any tool that may be necessary to perform diagnostic evaluations, system adjustment, and/or parametric software changes on any unit of microprocessor-based elevator control equipment and means of suspension other than standard elevator steel cables furnished and install by the Elevator Contractor. Accompanying the printed instructions shall be any and all access codes, password, or other proprietary information that is necessary to interface with the microprocessor-control equipment.

1.05 QUALITY ASSURANCE

A. Manufacturer: Minimum of fifteen years experience in the fabrication, installation and service of elevators of the type and performance of the specified. The manufacturer shall have a documented quality assurance program.

B. Installer: The equipment manufacturer shall install the elevator.

C. Inspection and Testing: In accordance with requirements of local jurisdiction, obtain required permits, inspections and tests, for normal and unrestricted elevator use.

1.06 DELIVERY, STORAGE AND HANDLING

A. If the construction site is not prepared to receive the elevator equipment at the agreed ship date, the General Contractor shall be responsible to provide a safe, dry, and easily accessible storage area on or off the premises. Additional lablor costs for double handling will be the responsibility of the general contractor.

B. Delivered elevator materials shall be stored in a protected environment in accordance with manufacturer recommendations. A minimum storage area of 10 feet by 20 feet is required adjacent to the hoistway.

1.07 WARRANTY

A. Provide manufacturer warranty for a period of one year. The warranty period is to begin upon Substantial Completion of the Contract. Warranty covers defects in materials and workmanship. Damage due to ordinary use, vandalism, improper or insufficient maintenance, misuse, or neglect do not constitute defective material or workmanship.

1.08 MAINTENANCE SERVICE

A. The elevator manufacturer shall provide maintenance service consisting of regular examinations and adjustments of the elevator equipment for a period of 12 Months after date of substantial completion. Replacement parts shall be produced by the original equipment manufacturer.

B. Maintenance service be performed during regular working hours of regular working days and shall include regular time call back service.

C. Maintenance service shall not include adjustments, repairs or replacement of parts due to negligence, misuse, abuse or accidents.

PART 2 PRODUCTS

2.01 MANUFACTURER

A. Provide AC gearless machine room-less elevator systems subject to compliance with the design and performance requirements of this specification. Elevator manufacturers may include but are not limited to one of the following:
   1. Basis of Design: EcoSpace™ traction elevators by KONE, Inc. (www.kone.com).

2. Other acceptable machine room-less products: manufacturer with minimum 15 years experience in manufacturing, installing, and servicing elevators of the type required for the project.

2.02 EQUIPMENT: CONTROL COMPONENTS AND CONTROL SPACE

A. Controller: Provide microcomputer based control system to perform all of the functions.
1. All high voltage (110V or above) contact points inside the controller cabinet shall be protected from accidental contact in a situation where the controller doors are open.
2. Controller shall be separated into two distinct halves; Motor Drive side and Control side. High voltage motor power conductors shall be routed and physically segregated from the rest of the controller.
3. Provide a serial cardrack and main CPU board containing a non-erasable EPROM and operating system firmware.
4. Variable field parameters and adjustments shall be contained in a non-volatile memory module.

B. Drive: Provide Variable Voltage Variable Frequency AC drive system to develop high starting torque with low starting current.

C. Controller Location: Locate controller{s} in an integral cabinet adjacent to the entrance frame at the top landing of the elevator.

2.03 EQUIPMENT: HOISTWAY COMPONENTS

A. Machine: AC gearless machine, with permanent magnet synchronous motor, direct current electro-mechanical disc brakes and integral traction drive sheave, mounted to the car guide rail at the top of the hoistway.

B. Governor: Friction type over-speed governor rated for the duty of the elevator specified.

C. Buffers, Car and Counterweight: Polyurethane buffer.

D. Hoistway Operating Devices:
1. Emergency stop switch in the pit
2. Terminal stopping switches.
3. Emergency stop switch on the machine

E. Positioning System: System consisting of magnets and proximity switches.

F. Guide Rails and Attachments: Steel rails with brackets and fasteners.

2.04 EQUIPMENT: HOISTWAY ENTRANCES

A. Hoistway Entrances
1. Sills: extruded.
2. Doors: Hollow metal construction with vertical internal channel reinforcements.
3. Fire Rating: Entrance and doors shall be UL fire-rated for 1-1/2 hour.
4. Entrance Finish: Brushed Stainless Steel.
5. Entrance Markings Jamb Plates: Provide standard entrance jamb tactile markings on both jambs, at all floors. Plate Mounting: Refer to manufacturer drawings.

2.05 EQUIPMENT: CAR COMPONENTS

A. Car Frame: Provide car frame with adequate bracing to support the platform and car enclosure.

B. Platform: Platform shall be all steel construction.

C. Car Guides: Provide guide-shoes mounted to top and bottom of both car and counterweight frame. Each guide-shoe assembly shall be arranged to maintain constant contact on the rail surfaces. Provide retainers in areas with Seismic design requirements.

D. Steel Cab
1. Car Wall Finish: Brushed stainless steel.
2. Car Front Finish: Brushed stainless steel.
3. Car Door Finish: Brushed stainless steel.
4. Ceiling:
a. Standard Translucent Panels - LF-1: Polygal Translucent three panel suspended ceiling with T-5 Fluorescent lighting and Brushed Aluminum frame.
5. Handrail:
a. Round tube brushed aluminum - 1.5 in.. Rails to be located on Side Walls of car enclosure.
6. Flooring: By others. (Not to exceed 2sqft & 1/2" finished depth.)
7. Threshold: Aluminum
8. Protective pad hooks and quilted fire retardant protective pads: Pad to be hung from suspended ceiling

E. Emergency Car Signals
1. Emergency Siren: Siren mounted on top of cab that is activated when the alarm button in the car operating panel is engaged. Siren shall have rated sound pressure level of 80 dB(A) at a distance of three feet from device. Siren shall respond with a delay of not more than one second after activation of alarm button.
2. Emergency Car Lighting: Provide emergency power unit employing a 12-volt sealed rechargeable battery and totally static circuits shall illuminate the elevator car and provide current to the alarm bell in the event of building power failure.
3. Emergency Exit Contact: An electrical contact shall be provided on the car-top exit.

F. Ventilation: Fan.

2.06 EQUIPMENT: SIGNAL DEVICES AND FIXTURES

A. Car Operating Panel: Provide car operating panel with all push buttons, key switches, and message indicators for elevator operation.
1. Flush Car operating panel shall contain a bank of round, mechanical, illuminated buttons marked to correspond to landings served, emergency call button, door open button, door close button, and key switches for lights, inspection, and exhaust fan. Buttons have amber illumination (halo). All buttons to have raised text and Braille marking on left hand side. The car operating display panel shall be amber Scrolling DOT-matrix. All texts, when illuminated, shall be amber. The car operating panel shall have a brushed stainless steel finish.
2. Additional features of car operating panel shall include:

a. Car Position Indicator within operating panel (amber).
b. Elevator Data Plate marked with elevator capacity and car number on car top.
c. Help buttons with raised markings.
d. In car stop switch per local code.
e. Firefighter's hat.
f. Firefighter's Phase II Key-switch.
g. Call Cancel Button.
h. Pre-programmed integrated ADA phone (complete description of krms features included as standard)
i. Help Button/Communicator. Activation of help button will initiate two-way communication between car and a location inside the building, switching over to alternate location if call is unanswered, where personnel are available to take the appropriate action. Visual indicators are provided for call initiation and call acknowledgement.
j. Firefighter's Phase II emergency in-car operating instructions.

B. Hall Fixtures: Wall mounted hall fixtures shall be provided with necessary push buttons and key switches for elevator operation. Wall mounted hall fixtures shall have a brushed stainless steel finish.
1. Hall fixtures shall feature round, mechanical, buttons in applied mount face frame. Hall fixtures shall correspond to options available from that landing. Buttons shall be in a vertically mounted fixture. Hall fixtures shall not be jamb-mounted. Hall lanterns shall feature amber illumination.

C. Car Lantern and Chime: A directional lantern visible from the corridor shall be provided in the car entrance. When the car stops and the doors are opening, the lantern shall indicate the direction in which the car is to travel and a chime will sound. The chime will sound once for up and twice for down.

2.07 EQUIPMENT: ELEVATOR OPERATION AND CONTROLLER

A. Elevator Operation
1. Simplex Collective Operation: Using a microprocessor-based controller, operation shall be automatic by means of the car and hall buttons. If all calls in the system have been answered, the car shall park at the last landing served.
2. Zoned Car Parking.
3. Relative System Response Dispatching.

B. Standard Operating Features to include:
1. Full Collective Operation
2. Fan and Light Control.
3. Load Weighing Bypass.
4. Ascending Car Uncontrolled Movement Protection
5. Top of Car Inspection Station.

C. Additional Operating Features to include:
1. Hoistway Access Bottom Landing
2. Hoistway Access Top Landing
3. Emergency Battery Power Supply

When the main line power is lost for longer than 5 seconds the emergency battery power supply provides power automatically to the eleva-

tor controller. The elevator will rise or lower to the first available landing, open the doors, and shut down. The elevator will return to service upon the return of normal main line power. An auxiliary contact on the main line disconnect and shunt trip breaker (if used) will be provided by others.

D. Elevator Control System for Inspections and Emergency
   1. Provide devices within controller to run the elevator in inspection operation.
   2. Provide devices on car top to run the elevator in inspection operation.
   3. Provide within controller an emergency stop switch to disconnect power from the brake and prevents motor from running.
   4. Provide the means from the controller to mechanically lift and control the elevator brake to safely bring car to nearest available landing when power is interrupted.
   5. Provide the means from the controller to reset the governor over speed switch and also trip the governor.
   6. Provide the means from the controller to reset the emergency brake when set because of an unintended car movement or ascending car over speed.
   7. Provide the means for the control to reset elevator earthquake operation.

2.08 EQUIPMENT: DOOR OPERATOR AND CONTROL

A. Door Operator: A closed loop permanent magnet VVVF high-performance door operator shall be provided to open and close the car and hoistway doors simultaneously. Door movement shall be cushioned at both limits of travel. Electro-mechanical interlock shall be provided at each hoistway entrance to prevent operation of the elevator unless all doors are closed and locked. An electric contact shall be provided on the car at each car entrance to prevent the operation of the elevator unless the car door is closed.

B. The door operator shall be arranged so that, in case of interruption or failure of electric power, the doors can be readily opened by hand from within the car, in accordance with applicable code. Emergency devices and keys for opening doors from the landing shall be provided as required by local code.

C. Doors shall open automatically when the car has arrived at or is leveling at the respective landings. Doors shall close after a predetermined time interval or immediately upon pressing of a car button. A door open button shall be provided in the car. Momentary pressing of this button shall reopen the doors and reset the time interval.

D. Door hangers and tracks shall be provided for each car and hoistway door. Tracks shall be contoured to match the hanger sheaves. The hangers shall be designed for power operation with provisions for vertical and lateral adjustment. Hanger sheaves shall have polyurethane tires and prelubricated sealed-for-life bearings.

E. Electronic Door Safety Device. The elevator car shall be equipped with an electronic protective device extending the full height of the car. When activated, this sensor shall prevent the doors from closing or cause them to stop and reopen if they are in the process of closing. The doors shall

remain open as long as the flow of traffic continues and shall close shortly after the last person passes through the door opening.

PART 3 EXECUTION

3.01 EXAMINATION

A. Field measure and examine substrates, supports, and other conditions under which elevator work is to be performed.

B. Do not proceed with work until unsatisfactory conditions are corrected.

C. Prior to start of Work, verify hoistway is in accordance with shop drawings. Dimensional tolerance of hoistway from shop drawings: -0 inches +2 inches. Do not begin work of this section until dimensions are within tolerances.

D. Prior to start of Work, verify projections greater then 2 inches (4 inches if ASME A17.1/CSA B44 2000 applies) must be beveled not less then 75 degrees from horizontal.

E. Prior to start of Work, verify landings have been prepared for entrance sill installation. Traditional sill angle or concrete sill support shall not be required.

F. Prior to start of Work, verify elevator pit has been constructed in accordance with requirements, is dry and reinforced to sustain vertical forces, as indicated in approved submittal. Verify that sumps or sump pumps located within pit will not interfere with installed elevator equipment.

G. Prior to start of Work, verify control space has been constructed in accordance with requirements, with access coordinated with elevator shop drawings, including Sleeves and penetrations.

H. Verify installation of GFCI protected 20-amp in pit and adjacent to each signal control cabinet in control space.

3.02 PREPARATION

A. Coordinate installation of anchors, bearing plates, brackets and other related accessories.

3.03 INSTALLATION

A. Install equipment, guides, controls, car and accessories in accordance with manufacturer installation methods and recommended practices.

B. Properly locate guide rails and related supports at locations in accordance with manufacturer’s recommendations and approved shop drawings. Anchor to building structure using isolation system to minimize transmission of vibration to structure.

C. All hoistway frames shall be securely fastened to fixing angles mounted in the hoistway. Coordinate installation of sills and frames with other trades.

D. Lubricate operating system components in accordance with manufacturer recommendations.

E. Perform final adjustments, and necessary service prior to substantial completion.

3.04 CONSTRUCTION

A. Interface with Other Work:
1. Guide rail brackets attached to steel shall be installed prior to application of fireproofing.
2. Coordinate construction of entrance walls with installation of door frames and sills. Maintain front wall opening until elevator equipment has been installed.
a. Ensure adequate support for entrance attachment points at all landings.
b. Coordinate wall openings for hall push buttons, signal fixtures and sleeves. Each elevator requires sleeves within the hoistway wall.
c. Coordinate emergency power transfer switch and power change pending signals as required for termination at the primary elevator signal control cabinet in each group.
d. Coordinate interface of elevators and fire alarm system.
e. Coordinate interface of dedicated telephone line.

3.05 TESTING AND INSPECTIONS

A. Perform recommended and required testing in accordance with authority having jurisdiction.

B. Obtain required permits and provide originals to Owner’s Representative.

3.06 DEMONSTRATION

A. Prior to substantial completion, instruct Owner’s Representative on the proper function and required daily maintenance of elevators. Instruct personnel on emergency procedures.

END OF SECTION

END OF SECTION 142100

SECTION 210529 - SUPPORTS AND ANCHORS FOR FIRE SUPPRESSION

PART 1 - GENERAL

1.01 WORK INCLUDES

A. Base Bid:
   1. Contractor Provide:
      a. Supports for sprinkler pipe.
      b. Sleeves, seals and firestopping for sprinkler pipe.
      c. Escutcheons on sprinkler pipe.
      d. Penetrations in existing and new walls required for fire sprinkler pipe.

1.02 RELATED WORK

A. Specified Elsewhere:
   1. 210553 – Identification for Fire Suppression Pipe and Equipment.
   2. 211100 – Fire Protection Piping.
   3. 211316 – Fire Protection.

1.03 SYSTEM DESCRIPTION

A. Definitions:
   1. Fire suppression pipe includes that for wet pipe and dry pipe.
   2. Fire suppression pipe is also called fire sprinkler pipe, fire extinguishing water and fire protection water.

1.04 REFERENCES

A. AISC - American Institute of Steel Construction.

B. ASTM F708 - Design and Installation of Rigid Pipe Hangers.

C. ASTM E814 - Fire Stop Sealant.

D. NFPA 13 - Installation of Sprinkler Systems, latest edition.

1.05 SUBMITTALS

A. Submit under provisions of Section 013300.

B. Product Data: Provide manufacturers catalog data including load capacity and firestopping capability. Submit installation techniques to be used for intumescent putty sealants.

1.06 REGULATORY REQUIREMENTS

A. Supports for sprinkler piping shall conform with NFPA 13 and this specfication.

1.07 COORDINATION

A. Sleeves:
   1. Coordinate placement with masonry and concrete trades.
   2. Sleeves installed after wall and floor construction are acceptable per this specification.

PART 2 - PRODUCTS

2.01 MANUFACTURER & PERFORMANCE

A. Unless otherwise specified the manufacturer's number specified or scheduled is listed merely as an aid to prospective bidders. In most cases it is an incomplete number and relies upon the written description to fully define the item. Where model numbers define a single manufactured item which does not include the items include in the written description, the model number shall be modified as required to most closely meet the described requirements.

2.02 PIPE HANGERS AND SUPPORTS

A. Acceptable Manufacturers.
1. Anvil.
2. B-Line.
3. Erico.
4. Grip Strut.
5. Grinnel.
6. Unistrut.

B. Hanger Description:
1. Hangers, upper attachments, rods and accessories shall be UL listed and FM approved for the application noted.
2. Side mounted brackets for attachment to wood joist shall be bolt through steel angle or malleable iron bracket equal to B-Line. Figure 51 or 56 or 58 or offset set eye socket equal to B-Line B-Line B3223-3/8.
3. Single screw attachments for wood shall have minimum of 3/8″ x 2-1/2″ lag screw with hexagonal head of sufficient height and length to fully envelop a 3/8″ hanger rod. Device shall be equivalent to Argco 25-20-315B.
4. Clamps for attachment to bar joists and beams shall be C-clamps with retaining straps or steel or malleable iron adjustable beam clamps equal to B-Line Figure B-3036 with B-3362 returning strap and Figures B-3040 or B-3050.
5. Strut supports shall be primed 14 or 12 gauge rolled carbon steel with galvanized die-formed accessory clamps and fasteners.
6. "J-Hooks" for 2" pipe and smaller shall be 1/4" thick by 1-1/4" wide steel rated for 200 lbs each.

C. Fire Protection Piping:
1. Conform to NFPA 13.
2. Hangers for Pipe Sizes 1″ to 4″: Carbon steel, adjustable swivel.

D. Enclosure/Supports:
1. Shall consist of factory molded and extruded fire retardant, modular PVC components. Cover shall have factory made inside and outside corner fittings, end caps, and coupling fittings.
2. Mounting clips shall double as pipe supports.
3. Shall have ASME E 84 of 20 or less and smoke developed of 25 or less.
4. Shall be L shaped for ceiling wall corners.
5. Acceptable Products:
   a. DecoShield Pipe Covering System made by:

2.03 ACCESSORIES

A. Hanger Rods: Mild steel continuous threaded.

B. Auxiliary Steel and Trapeze Hangers.
1. Shall be Schedule 40 steel pipe or rolled steel shapes complying with AISC manual.
2. Manufactured struts shall be rolled of 12, 14, or 16 gauge material to meet loading required or as noted on Drawings or otherwise

specified. It shall have a hot dipped galvanized or epoxy coating or shall be prime painted.

C. Acceptable Products.
1. B-Line.
2. Uni-strut.
3. Grip Strut.

2.04 ANCHORS

A. Masonry or concrete type for pipe or equipment supports. Shall be wedge type with either studs or National coarse female thread. Alternative type shall be self drilling expansion type. Anchors shall be U. L. listed.

B. Masonry or concrete type for securing escutcheons to masonry shall be "nail-in" type. Unit shall consist of broad head on hollow zinc alloy core with steel drive pin. Provide with dielectric washer.

2.05 SLEEVES

A. Sleeves for Pipes Through Walls Rated at less than one hour. At a minimum shall be 24 gauge galvanized steel or PVC pipe.

B. Sleeves for Pipes Through Walls Rated at one hour or greater or all masonry walls. Schedule 40 or standard weight galvanized steel pipe.

C. Core drilled openings in solid masonry do not require sleeves.

2.06 SEALANTS

A. Fire Stopping - Shall comply with UL1479 and ASTM E0814. Shall have an installed F rating of two hours.

B. Fire stopping for metal pipe and conduit shall be tube or trowel applicable and shall remain pliable. Material shall be waterproof or paintable with latex paint.

C. Exterior moisture sealant - Shall be non-hardening silicone type rated for temperatures of -40 degrees F to 250 degrees F. Material shall be available in white, gray, brown, and black colors. Material shall be sunlight resistant.

D. Interior sealant shall be silicone type rated for temperatures of 0 degrees F to 250 degrees F. Material shall be available in white, clear, gray, brown or black.

E. Manufacturer

		Fire Stop (Metal)	Exterior Sealant	Interior Sealant
1.	Tremco	Fyre-shield	Spectrum 2	Spectrum 1
2.	3M	Fire Dam	2000 150	FS-195 FS-195
3.	General Electric	----	SCS1000	SCS1000
4.	Dow Corning	----	999A	999A
5.	Hilti	FS601	----	----
6.	Rectorseal	Metacaulk 950	----	----

2.07 ESCUTCHEONS

A. For piping - Shall be chrome finished split faced plastic.

B. For multiple pipes or where holes for single pipe are over large or offset.
   1. Utilize pre-painted aluminum sheet fabricated to cover entire hole and seal within 1/4" of the pipe or pipe covering.
   2. Holes shall be hole sawed or punched. Holes shall be round.

PART 3 - EXECUTION

3.01 APPLICATION

A. Fire Sprinkler Pipe:
   1. Shall be supported in accord to NFPA 13.

3.02 PREPARATION

A. Coordination of Trades:
   1. Locate sleeves in conjunction with general trades. Determine exact elevation and lateral position.
   2. At contractors option core drill openings in floors and core drill or cut in sleeves in walls.

3.03 ANCHORS

A. Use anchors in concrete or masonry walls and floors.

B. Drill hole clean of loose material. Install anchor, flush with surface. Size hole in accord to manufacturers' recommendation. Physically test anchor by pulling against it. Loose anchors will not be accepted.

3.04 PIPE HANGERS AND SUPPORTS

A. Utilize hangers in accord to Application paragraphs.

B. Place hangers within 12″ of each horizontal elbow.

C. Use hangers with 1-1/2″ minimum vertical adjustment.

D. Support vertical piping such that it cannot be deflected more than 1/8" from center by hand pressure.

E. Where several pipes can be installed in parallel and at same elevation, provide multiple or trapeze hangers.

F. Support riser piping independently of connected horizontal piping.

G. Locate hangers for pipe movement without disengagement of supported pipe.

H. Provide auxiliary steel to span structure where required. Provide in accord to Paragraph 3.06 below.

I. Secure upper attachment from the top or side of wood joists and the top or bottom of steel beams.

3.05 SLEEVES, SEALS, FIRESTOPPING & ESCUTCHEONS

A. Provide firestopping at all new penetrations between floors and across elevator shaft walls and furnace room walls.

B. See Architectural Drawings for the location of walls with a fire resistance rating of one hour or greater or which extend continuously to the roof deck, or which are designated as smoke barriers.

C. Size sleeves large enough to allow for movement due to expansion and contraction.

D. Openings installed in concrete floors and walls and masonry walls shall be cored drilled. Extend sleeves through floors one inch above finished floor level. Caulk sleeves.

E. Where steel pipe penetrates walls with fire resistance rating of 1 hour or greater or as noted above, use fire stopping caulk between pipe and sleeve.

F. Exterior wall penetrations shall be sealed with colored silicone between pipe and sleeve. Pack interior of sleeve with fiberglass batt.

G. Provide escutcheon on exposed interior penetrations. Secure escutcheons into place with bead of sealant under. Wipe away exposed sealant.

H. The annular area around pipe which penetrate walls which extend continuously to the roof deck but which are un-rated shall be packed tightly with fiberglass batt, or shall be sealed tightly with caulking.

I. Sleaves passing through upper level floors shall terminate 1″ above the floor.

3.06 AUXILIARY STEEL AND EQUIPMENT SUPPORTS

A. Hanging Equipment and Materials:
   1. Shall be supported from the top or upper side of wood joists, from concrete decking, or from the bottom or top of steel beams.
   2. Auxiliary steel shall be sized in accord to NFPA.

B. Equipment supports shall be as shown on drawings, and specified.

END OF SECTION 210529

SECTION 210553 – IDENTIFICATION FOR FIRE SUPRESSION PIPE AND EQUIPMENT

PART 1 - GENERAL

1.01 WORK INCLUDES

A. Base Bid:
   1. Contractor Provide:
      a. Pipe labels.
      b. Valve labels.
      c. Equipment labels.
      d. NFPA 13 design placards.

1.02 RELATED WORK

A. Specified Elsewhere.
   1. 211100 - Fire Protection Piping.
   2. 211316 – Fire Protection.

1.03 REFERENCES

A. ANSI B13.1 - Scheme for the Identification of Piping Systems.

1.04 SUBMITTALS

A. Submit under provisions of Section 013300.

B. Submit list of wording, symbols, letter size, and color coding for identification.

C. Product Data: Provide manufacturers catalog literature for each product required.

D. Manufacturer's Installation Instructions: Indicate special procedures, and installation.

PART 2 - PRODUCTS

2.01 MANUFACTURER & PERFORMANCE

A. Unless otherwise specified the manufacturer’s number specified or scheduled is listed merely as an aid to prospective bidders. In most cases it is an incomplete number and relies upon the written description to fully define the item. Where model numbers define a single manufactured item which does not include the items include in the written description, the model number shall be modified as required to most closely meet the described requirements.

2.02 NAMEPLATES

A. Description: Laminated three-layer plastic with engraved black letters on light contrasting background color. Lettering shall be 1/4” tall. Placard size shall accommodate message without abbreviation. Placard shall be rectangular. Multiple lines shall be utilized to minimize length to height ratio.

2.03 PIPE LABELS

A. Shall have flexible PVC or vinyl backer at either snaps over pipe or is strap-on with draw ties, or glues to itself.

B. Background shall be red and black.

C. Letters shall be nominally 1/2″ for pipe up to 1″; 3/4″ for outside diameters up to 2-3/8″ and 1-1/4″ tall for larger pipe. Letters shall be black on red or white on black.

D. Acceptable Manufacturers:
   1. Brady - Bradysnap/strap-on.
   2. EMED - Kwik Coil/wrap-around.
   3. Seton - Setmark/markers-on-a-roll.

2.04 VALVE AND EQUIPMENT LABELS

A. Shall be constructed of nameplates scheduled above. Include description of zone served. I.E., “Dry Pipe Areas in Attics and Upper Floor”; wet pipe areas in lower and interior levels.

2.05 NFPA 13 PLACARDS

A. Shall either be pre-printed aluminum or plastic sheets approximately 8-1/2 x 11 or shall be flexible water proof custom printed sheets.

B. Shall contain information required by NFPA 13 Chapter 25.

C. Shall be produced for each calculated area.

PART 3 - EXECUTION

3.01 PREPARATION

A. Painted, paper or rubber surfaces shall be wiped clean.

3.02 INSTALLATION

A. Install plastic nameplates with corrosive-resistant mechanical fasteners.

B. Label Application:
   1. Provide valves tags on auxiliary drains, main drains and test connection.
   2. Provide equipment labels for air compressor; dry pipe valve and each wet pipe zone valve.
   3. Identify main piping, concealed or exposed, wrap around pipe labels. Install in clear view and align with axis of piping. Locate identification on each side of wall penetrations. Locate on minimum of 50’-0″ centers on straight runs without branches and take-offs.

END OF SECTION 210553

SECTION 211100 - FIRE PROTECTION PIPING

PART 1 - GENERAL

1.01 WORK INCLUDES

A. Base Bid:
   1. Contractor Provide:
      a. Pipe, fittings, valves, and connections for sprinkler systems.
      b. Connection of backflow preventer specified in 221119.
      d. Fire extinguishing water service including valve, valve box and tap.
      e. Fees required by local utility for tapping the existing water main.

1.02 RELATED WORK

A. Specified Elsewhere:
   1. 210553 – Identification for Fire Suppression Pipe and Equipment.
   2. 210529 – Supports and Anchors for Fire Suppression.
   3. 211316 – Fire Protection.

1.03 QUALITY ASSURANCE

A. Listed pipe and valves shall be visibly marked with name of listing Agency.

1.04 REGULATORY REQUIREMENTS

A. ANSI/ASME B16.1 - Cast Iron Pipe Flanges and Flanged Fittings, Class 25, 125, 250, and 800.

B. ANSI/ASME B16.3 - Malleable Iron Threaded Fittings, Class 150 and 300.

C. ANSI/ASME B16.5 - Pipe Flanges and Flanged Fittings.

D. ANSI/ASME B36.10 - Welded and Seamless Wrought Steel Pipe.

E. ANSI/ASTM A135 - Electric-Resistance-Welded Steel Pipe.

F. ANSI/AWWA C110 - Ductile Iron and Gray Iron Fittings.

G. ASTM A53 - Pipe, Steel, Black and Hot-Dipped, Zinc-coated Welded and Seamless.

H. ASTM A120 - Pipe, Steel, Black and Hot-Dipped, Zinc-coated (Galvanized) Welded and Seamless, for Ordinary Uses.

I. ASTM A234 - Piping Fittings of Wrought Carbon Steel and Alloy Steel for Moderate and Elevated Temperatures.

J. ASTM A795 - Black and Hot-Dipped Zinc-Coated (Galvanized) Welded and Seamless Steel Pipe for Fire Protection Use.

K. ASTM A536 - Ductile iron.

L. NFPA 13 - Installation of Sprinkler Systems, latest edition.

1.05 SUBMITTALS

A. Product data shall include manufacturers name and type of pipe, and joint compound and tape.

B. Provide Material Safety Data Sheets for all joint compounds and lubricants.

1.06 QUALITY ASSURANCE

A. Valves: Bear UL and FM label or marking. Provide manufacturer's name and pressure rating marked on valve body.

B. Piping shall be marked with UL and FM, labeling pressure rating, size and material number.

1.07 DELIVERY, STORAGE, AND HANDLING

A. Deliver and store valves in shipping containers, with labeling in place.

B. Provide temporary protective coating on cast iron and steel valves.

C. Provide temporary end caps and closures on piping and fittings. Maintain in place until installation.

1.08 DESCRIPTION

A. Definitions:
1. FM = FM Global = Factory Mutual Insurance.

PART 2 - PRODUCTS

2.01 MANUFACTURER & PERFORMANCE

A. Unless otherwise specified the manufacturer’s number specified or scheduled is listed merely as an aid to prospective bidders. In most cases it is an incomplete number and relies upon the written description to fully define the item. Where model numbers define a single manufactured item which does not include the items include in the written description, the model number shall be modified as required to most closely meet the described requirements.

2.02 SPRINKLER PIPING, ABOVE GROUND

A. Steel Pipe: Sizes 2-1/2" and larger shall be U.L. listed FM approved Schedule 10 meeting ASTM 135. ASTM A53; ASTM A120; ASTM A795; Pipe 1" to 2" in size shall be Schedule 40 black complying with ASTM A53 and ASTM A120.
1. Malleable Iron Fittings: ANSI/ASME B16.3, screwed type.
2. Mechanical Grooved Couplings: Shall be UL and FM listed for sprinkler systems. Malleable iron housing clamps to engage and lock. Elastomeric EPDM sealing gasket, steel bolts, nuts, and washers.
3. Pipe for dry pipe systems shall be galvanized inside and out. Pipe for wet pipe systems shall be black iron.
4. Acceptable Products - grooved fittings.
   a. Victaulic Firelock.
   b. Anvill International Gruvlok.

2.03 BUTTERFLY VALVES

A. Shall be UL listed FM approved and include supervisory switch and auxiliary switch rated at 0.5 amp at 120 volts. Provide with wheel and worm gear operator and grooved connections.

B. Body shall be ductile iron. Stem shall be 416 stainless steel. Disc shall be EPDM encapsulated ductile iron.

C. Provide with indicator flag and shear pins on the wheel and stem. Shall have UL and FM approvals in castings.

D. Acceptable Products:
1. Anvil Gruvlok Figure AE7722-3A.

2.03 BALL VALVES

A. Up to and including 2″ one piece body, chrome plated brass ball, teflon or nylon seats and stuffing box ring, lever handle, threaded ends. Unit shall be UL listed and FM approved.

B. Manufacturers:
1. Potter-Roemer Model 4400 Series.
2. Victaulic Model 722 Series.
3. Nibco Model KT-580 – 70 Series.
4. Stockham Forged Brass 600 Series Ball.
5. Red and White Figure 5044F.
6. Hammond 8901.
7. Milwaukee Equivalent.
8. Apollo Equivalent.

2.04 BACK FLOW PREVENTER. See 221119.

2.05 GATE VALVES (ABOVE GROUND)

A. General Requirements:
1. Shall be UL listed and FM approved for use as a system control valve.
2. Shall have O S & Y (outside screw and yoke operator).
3. Shall be rated for 175 psi non-shock cold water.

B. For Sizes 2-1/2" and Larger:
1. Shall have cast iron body, with resilient wedge and flanged bonnet.
2. Shall have non-asbestos packing.
3. Connections shall be flanged or grooved as called out of Drawings.

C. Acceptable Products: 2-1/2" & Larger Gate Valve
1. Nibco 607

2.06 GATE VALVES (UNDERGROUND)

A. General Requirements:
1. Shall be UL listed and FM approved.
2. Shall have resilient wedge.
3. Shall have non-rising stem, 1-1/4" square drive nut and flat plate for indicator post.
4. Shall be rated for 250 psig.

B. Valves 3" and above.
1. Shall have flange x mechanical joint connection.
2. Body shall be ductile iron.
3. Bonnet shall be unboltable.
4. Glands, seals and gaskets shall be replaceable in place.

5. Shall have epoxy coating inside and outside.

C. Indicator Posts:
1. Shall match valves noted above.
2. Shall be vertical configuration.
3. Shall be telescoping and adjustable to match the depth requirements.
4. Shall have operating rod with guides.
5. Shall have demountable ductile iron operating handle/wrench.
6. Shall have polycarbonate window and aluminum targets which show "open" and "shut" positions.
7. Shall have ductile iron window marked water.

D. Tapping Sleeves:
1. Shall have mechanical joint run connection and flanged outlet connection. Configuration shall be split longitudinally. It shall be constructed of epoxy coated ductile iron.
2. Shall have gasketing for connection to ductile iron or SPR 26 plastic as verified in the field.
3. Shall be rated for 200 psi pressure.

E. Acceptable Products:

	Valve	Indicator Posts	Tap Sleeve
1. NIBCO	FM609-RW	NIP-IAJ	---
2. Mueller	A2360	A-20806	H615
3. Clow	C509	---	---
4. Kennedy	C509	2945A	Fig 957/960

PART 3 - EXECUTION

3.01 PREPARATION

A. Ream pipe and tube ends. Remove burrs. Bevel plain end ferrous pipe.

B. Remove scale and foreign material, from inside and outside, before assembly.

3.02 INSTALLATION

A. Install piping in accordance with NFPA 13 for sprinkler systems.

B. Route piping in orderly manner, plumb and parallel to building structure. Maintain gradient. Route piping mains essentially as shown on Drawings.

C. Install piping to conserve building utility space, and not interfere with use of space and other work.

D. Group piping whenever practical at common elevations.

E. Install piping to allow for expansion and contraction without stressing pipe, joints, or connected equipment.

F. Slope piping and arrange systems to drain at low points.

G. Do not penetrate building structural members unless indicated.

H. Provide sleeves when penetrating fire rated floors, ceilings, and walls. Seal pipe and sleeve penetrations to achieve fire resistance equivalent to fire separation required. Refer to Section 210529.

I. Die cut screw joints with full cut standard taper pipe threads with non-toxic joint compound applied to male threads only.

J. Install valves with stems upright or horizontal, not inverted. Remove protective coatings after installation.

K. Provide ball valves for drain down and test service.

L. Use Schedule 40 steel pipe and threaded fittings for pipe 2″ and smaller. Use Schedule 10 steel pipe and grooved fittings for piping 2-1/2″ and larger. Use galvanized pipe for all dry pipe service. Use black or galvanized pipe for wet pipe service.

M. Provide 1″ ball valve for test service.

N. Position drain valves in accessible locations.

O. Provide test connection as required by NFPA 13.

P. Display coupons (pipe cut outs) made for grooved tees and branch connections by suspending them with wire from main pipe adjacent to the fittings.

END OF SECTION 211100

SECTION 211316 - FIRE PROTECTION

PART 1 - GENERAL

1.01 WORK INCLUDES

A. Base Bid
   1. Contractor Provide:
      a. Wet pipe and dry pipe sprinkler systems.
      b. Hydraulic calculations and design.
      c. Certification of wet and dry pipe system.
      d. Alarm switches and supervisory switches.
      e. Fire Department connections with all accessories.

1.02 RELATED WORK

A. Specified Elsewhere:
   1. 211100 - Fire Protection Piping.
   2. 15430 - Plumbing Specialties.

1.03 REGULATORY REQUIREMENTS

A. NFPA 13 - Installation of Sprinkler Systems.

B. F.M. Global Requirements.

1.04 SYSTEM DESCRIPTION

A. System to provide coverage for building areas shown on Drawings.

B. Provide system to NFPA 13 light hazard for all areas but storage and mechanical rooms and ordinary hazard for storage and mechanical rooms.

C. Piping shall be sized in accordance with hydraulic calculations and routed essentially as shown on Drawings. Volumetric and pressure data are noted on the plan.

D. Interface system with building fire and smoke alarm system.

E. Fire department connections, drains and test stations shall be as shown.

1.05 SUBMITTALS

A. Submit under provisions of Section 013300. Provide one for A/E and those needed by the Contractor.

B. Shop Drawings: Indicate hydraulic calculations, detailed pipe layout, hangers and supports, components and accessories. Indicate system controls. Show head locations. If layout is changed from contract drawings, provide certification from the other trades that coordination items have been considered and new locations are acceptable to all parties. New locations are acceptable. Drawings shall be signed and dated by designer.

C. Product Data: Provide data on sprinkler heads including required Sprinkler Identification Number (SIN), valves, and specialties, including manufacturer’s catalogue information. Submit performance ratings rough-in details, weights, support requirements, and piping connections.

D. Installers Certificate: Certify that system has been tested and meets or exceeds specified requirements and code requirements. Provide for each test specified.

E. Submit copy of Designers NICET Certificate.

F. Submit line item price for fire protection on Schedule of Values. Identify supplier vendor.

1.06 PROJECT RECORD DOCUMENTS

A. Submit under provisions of Section 017839.

B. Record actual locations of sprinkler heads and deviations of piping from drawings. Indicate drain and test locations.

C. Submit two copies each of Record Drawings and Test Certificates to the Owner’s Representative.

1.07 OPERATION AND MAINTENANCE DATA

A. Submit under provisions of Section 017823.

B. Maintenance Data: Include components of system, servicing requirements, Record Drawings, inspection data, telephone number of service contractor.

1.08 QUALITY ASSURANCE

A. Perform Work in accordance with NFPA 13.

B. Equipment and Components: Bear UL label or marking.

1.09 QUALIFICATIONS

A. Sprinkler system designer shall have Level 3 certificate from National Institute for Certification of Engineering Technologies (NICET.

1.10 DELIVERY, STORAGE, AND HANDLING

A. Deliver, store, protect, and protect products to site under provisions of Section 016000.

B. Store products in shipping containers and maintain in place until installation. Provide temporary inlet and outlet caps. Maintain caps in place until installation.

1.11 EXTRA MATERIALS.

A. Provide extra sprinkler heads under provisions of NFPA 13.

B. Provide suitable wrenches for each head type.

C. Provide metal storage cabinet adjacent to main risers.

PART 2 - PRODUCTS

2.01 MANUFACTURER & PERFORMANCE

A. Unless otherwise specified the manufacturer’s number specified or scheduled is listed merely as an aid to prospective bidders. In most cases it is an incomplete number and relies upon the written description

to fully define the item. Where model numbers define a single manufactured item which does not include the items include in the written description, the model number shall be modified as required to most closely meet the described requirements.

2.02 SPRINKLER HEADS

A. All shall be listed by Underwriters Laboratories and approved by Factory Mutual Insurance for their designated use. All shall be rated for 175 psi maximum working pressure. All sprinklers used for this work shall be of the same manufacturer.

B. Common Requirements All Head Types:
1. Shall be quick response type either using frangible glass vials or fusible links.
2. Shall be factory-finished in white, black, brass or chrome as selected by the Architect for the multiple finished spaces.
3. Discharge coefficients of sprinkler heads shall be as required by calculation to meet required flow volumes.

C. Concealed Type:
1. Shall be two piece design with a removable cover plate assembly and a matching support and drop down deflector. Construction shall be of brass, bronze and/or chrome plated steel.
2. Cover plate shall have a minimum of 1/2" of adjustment. Cover plate shall drop away at temperatures of 135 degrees F for all spaces except where head is adjacent to a diffuser. Cover plate shall drop away at temperatures of 165 degrees F when next to a diffuser.
3. Sprinkler bulb shall shatter at temperatures of 155 degrees F for spaces not adjacent to diffusers and 200 degrees F for spaces adjacent to diffusers.
4. Discharge coefficient shall be 5.6 for standard or 11.6 for extended coverage. Connection shall be 1/2" or 3/4” or 1” NPT.

D. Dry Sprinkler Heads:
1. Shall be minimum of 7” long.
2. Shall have a remote plug that releases at the upper end of the unit allowing water to enter after the bulb shatters.
3. Inlet shall be a 1” or 3/4" NPT connection.
4. Construction shall be carbon steel with stainless steel and copper, brass, or bronze trim.
5. Sprinkler bulb shall shatter at temperatures of 155 degrees F.
6. Discharge coefficient shall be 5.6 for standard and 11.6 for extended coverage.
7. Shall have concealing cover per Paragraph C.2 above.

E. Exposed Heads:
1. Shall be usable with light or ordinary hazard occupancy.
2. Shall have rough bronze finish in equipment rooms and attics.
3. Shall have wire cage in equipment rooms.
4. Shall have 5.6 discharge coefficient with 1/2" NPT connection and 11.6 and ¾ connection for extended coverage.
5. Shall have upright or pendent style deflector.
6. Shall discharge at 155 degrees F temperatures except where placed near heaters or hot pipe where discharge shall be 200 degrees F.
7. Sprinklers in the attic shall discharge at 175 degrees.

F. Side Wall Heads:
1. Shall have recessed escutcheon and horizontal deflector.

2. Shall have discharge coefficient of 5.6 for standard and 11.6 for extended coverage.
3. Shall discharge at 155 degrees F temperatures.

G. Acceptable Products:

	Concealed	Exposed	Dry Type	Side Wall
1. Reliable	F4FR	F1FR	Equivalent	F1FR
2. Tyco	RF-II	TY-FRB	DS-C	TY-FRB
3. Viking	VK-404	VK-302/300	Equivalent	VK-306

2.03 PIPING SPECIALTIES

A. Water Flow Switch: Vane type switch for mounting horizontal or vertical, with two contacts rated 10 amps at 115 volt AC. Mount shall be U-bolt type with gasketed connection for direct placement on pipe. Unit shall be UL listed.

B. Valve Supervisory Switch: Reed type switch for mounting on O. S. and Y. gate valves with "j" bolt clamp. Unit shall have two double pole double throw micro switches rated for minimum of 5 amperes at 120V. Enclosure shall be NEMA 4 with tamper proof fasteners. Unit shall be UL and FM listed. Switches for post indicator valves shall be weatherproof type with 1/2" NPT mounting nipple.

C. Check Valve: Shall be ductile iron on cast iron with grooved connections, swing type check flapper with ground seat. Unit shall have drilled and tapped 3/4" drain and be UL and FM listed.

D. Fire Department Connection: Shall be 5″ Stortz connection with 4″ NPT connection and hard aluminum cap and chain. Finish shall be rough chrome plated. Escutcheon shall be labeled in accord to drawings. Unit shall be UL and FM listed.

E. Section Valves shall be UL listed and FM approved. These shall be tight closing worm operated butterfly valves.

F. Automatic Drain: Shall be orifice or ball type with union connection, 1/2" connection size, straight or angle construction.

G. Pressure Gauge: Shall be polished brass 3-1/2" diameter bourdon tube type with 30-3000 psi range and 1/4" NPT connection. Provide with stopcock and drain. Unit shall be UL and FM listed.

H. Acceptable Products:

	TYCO	Viking	Reliable
1. Flow Switch	---	VSR	Model A
2. Supervisory Switch	---	OS&Y	---
3. Check Valve	CV-1F	Model 67/68	Model G
4. Automatic Drain	AD-2	D/B-1	---
5. Pressure Gauge			

I. Acceptable Products:

	System Sensor	Potter	Victaulic	Croker
1. Flow Switch	WFD Series	VSR	---	---
2. Supervisory Switch	OSY2/PIBV-2	---	---	---
3. Check Valve	---	OSYSU Series	---	---
4. Automatic Drain	---	---	779 Series	---
5. Storz	---	5795 Series	---	6300

				Series
6. Pressure Gauge	---	6240	---	---

2.04 DRY PIPE SYSTEM

A. Shall be UL Listed and FM approved; manufactured and assembled by a single entity.

B. Shall include a differential valve, water supply pressure gauge, system air pressure gauge, air maintenance device, main valve drain, low body drain valve, alarm test valve, automatic drain valve, drip valve and accelerator, connection couplings, air pressure alarm switch and water flow alarm switch and piping.

C. Differential valve shall be ductile iron construction rated for 250 psig. It shall have either grooved or flanged connectors. It shall be externally resettable. It shall have hand hole, serviceable clapper and clapper facing and water seat. It shall operate using a small holding charge of air that has a mechanical advantage to contain a greater water pressure.

D. Trim:
1. Piping shall be Schedule 40 galvanized steel with galvanized malleable iron fittings.
2. Gauges shall be 2-1/2″ bourdon tube type with brass bodies. Range shall be 0-250 psi for air and 0-300 psi of water.
3. Alarm switches shall be diaphragm type with NEMA 4 enclosures. Switch ranges shall be appropriate for the system pressure.
4. Dry pipe accelerator shall be externally resettable pneumatic type of device. It shall be rated for maximum working water pressures of 250 psi and air pressures of 70 psi. It shall be constructed with austenitic series stainless steel internal components.
5. Air maintenance device shall be pressure reducing type. It shall be pre-piped with a globe valve bypass strainer, regulator, restrictor check valve and gauge port, galvanized Schedule 40 steel pipe and malleable iron fittings.

E. Air compressor shall be preassembled and prewired.
1. Include pump, electric motor, receiver, automatic pressure control, pressure gauge, muffler, and automatic receiver drain.
2. Pump shall be lubricated piston type with splash oil lubrication and permanent bearings. Provide with automatic unloaders, and belt drive.
3. Pump shall be receiver mounted on tank rated for minimum of 200 psi. Provide relief valve. Receiver and pump shall be UL listed for its operation. It shall fill system in 30 minutes or less.
4. Motor shall be 120v 1-phase of size noted on drawings.

F. Valve size shall be as determined by hydraulic calculations of the installing construction as reviewed by the Engineer.

PART 3 - EXECUTION

3.01 PREPARATION

A. Coordinate work of this Section with other affected work.

3.02 INSTALLATION

A. Install devices in accord with manufacturer’s instructions and NFPA 13.

B. Locate fire department connection with sufficient clearance from walls, obstructions, or adjacent devices to allow coupling of fire department hoses.

C. Install sprinkler heads in areas with ceilings after painting is complete and ceilings are installed. Sprinkler heads shall be centered on 24 x 24 module of tile unless noted otherwise. Do not place center on 48″ dimension. See plan for head locations escutcheons shall fully cover opening in ceiling.

D. If heads are installed prior to painting, apply masking tape or paper cover to ensure sprinkler heads do not receive field paint finish. Remove after area painting is complete.

E. Flush entire piping system of foreign matter.

F. Hydrostatically test entire system to 200 psig for two hours, witnessed by Architect/Engineer.

G. Flow test system to note response time of fire alarm system; test to be witnessed by Architect/Engineer.

H. Provide sprinkler head rack and wrench for each type of sprinklers installed on project.

I. All head runout connections shall be made from the top of the main or branch main. Provide return for pendent heads.

J. Butterfly valves shall be installed with the valve stem in a horizontal position. Gate valves shall be installed with the stem at or above horizontal.

END OF SECTION 211316

SECTION 220529 - SUPPORTS AND ANCHORS FOR PLUMBING

PART 1 - GENERAL

1.01 WORK INCLUDES

A. Base Bid:
1. Contractor Provide:
   a. Supports for plumbing pipe and equipment.
   b. Sleeves, seals and firestopping for plumbing piping.
   c. Escutcheons on plumbing piping.
   d. Flashing for vent piping.
   e. Penetrations required in existing walls, floors and roofs.

1.02 RELATED WORK

A. Specified Elsewhere:
1. 220700 – Plumbing Insulation.
2. 221100 – Domestic Water Piping.
3. 221119 - Domestic Water Piping Specialties.
4. 221300 – Sanitary Piping.
5. 221319 - Sanitary Waste Pipe Specialties.
6. 221329 - Sanitary Sewage Pumps.
7. 221400 – Storm Drainage Piping.
8. 221429 - Sump Pumps.
9. 223300 – Water Heaters.
10. 224000 - Plumbing Fixtures.

1.03 SYSTEM DESCRIPTION

A. Definitions:
1. Plumbing piping includes domestic hot, cold and hot water return piping, non-potable, water piping, waste and vent piping, and non-potable water piping.

1.04 REFERENCES

A. AISC - American Institute of Steel Construction.

B. ASME B31.9 - Building Services Piping

C. ASTM F708 - Design and Installation of Rigid Pipe Hangers.

D. ASTM E814 - Fire Stop Sealant.

1.05 SUBMITTALS

A. Submit under provisions of Section 013300.

B. Product Data: Provide manufacturers catalog data including load capacity and firestopping capability. Submit installation techniques to be used for intumescent putty sealants. Submit pipe supports not listed in this specification.

C. Samples: Provide a minimum of one sample of copper pipe rough-in supports with its product data.

1.06 REGULATORY REQUIREMENTS

A. Conform to Illinois Plumbing Code for support of plumbing piping.

1.07 COORDINATION

A. Sleeves:
1. Coordinate placement with masonry and concrete trades.
2. Sleeves installed after wall and floor construction are acceptable per this specification.

B. Insulation:
1. It is not acceptable for piping with cold surfaces not to be insulated through hangers. Provide hangers specified for insulation to be large enough to pass insulation through or to have built in layers of insulating material that can be sealed to.

PART 2 - PRODUCTS

2.01 MANUFACTURER & PERFORMANCE

A. Unless otherwise specified the manufacturer’s number specified or scheduled is listed merely as an aid to prospective bidders. In most cases it is an incomplete number and relies upon the written description to fully define the item. Where model numbers define a single manufactured item which does not include the items include in the written description, the model number shall be modified as required to most closely meet the described requirements.

2.02 PIPE HANGERS AND SUPPORTS

A. Acceptable Manufacturers.
1. Anvil.
2. B-Line.
3. Erico.
4. Grip Strut.
5. Grinnel.
6. Unistrut.

B. Hanger Description:
1. Side mounted brackets for attachment to wood joist shall be bolt through steel angle or malleable iron bracket equal to B-Line B-3060 or B-3062 or offset eye socket equal to B-Line B3223-3/8.
2. Clamps for attachment to bar joists and beams shall be C-clamps with retaining straps or steel or malleable iron adjustable beam clamps equal to B-Line Figure B-3036 with B-3360 services strap and Figure B-3040 or B-3050.
3. Strut supports shall be primed 14 or 12 gauge rolled carbon steel with galvanized die-formed accessory clamps and fasteners.
4. "J-Hooks" for 2" pipe and smaller shall be 1/4" thick by 1-1/4" wide steel rated for 200 lbs each.
5. Hold down straps shall be die-stamped of galvanized sheet steel or formed of galvanized malleable iron.

C. Plumbing Piping:
1. Conform to ASME B31.9 ASTM F708 and Illinois Plumbing Code.
2. Hangers for Pipe Sizes 1-1/2” and Over: Carbon steel, adjustable, clevis.
3. Multiple or Trapeze Hangers: Steel channels with welded spacers and hanger rods and neoprene inserts.
4. Vertical Support: Steel riser clamp or steel strut with accessory clips and neoprene inserts.
5. Rough-in Supports: Pressure treated lumber at least 3/4" thick x 3-1/2" wide or 1-1/2" x 1-1/2" without flaws, or rigid copper plate with preformed full circle openings or a rigid copper angle with a semi-circular depression to which copper pipe shall be rigidly

soldered. Telescoping steel U-channels with plastic clips sized for copper pipe are also acceptable. Simple flat straps withsemi-circular holes are not acceptable. The completed installation shall be rigid.

6. Floor Hold Downs: Hold down straps as specified.
7. Hangers for Pipe Sizes 1/2″ to 1-1/2″, Carbon steel, adjustable swivel.
8. Copper Pipe Support: Carbon steel ring, adjustable, copper plated.
9. Preformed straps shall be copper sheet or molded heat resistant PVC or nylon in a semicircular shape for an individual pipe with mounting ears. Install with black drywall screws. This is not to be construed as a strap that reaches across a stud space on to which pipe is soldered into place.
10. Wall Supports for Horizontal Pipe: "J-Hooks" or struts, see drawing.
11. Neoprene inserts for insulated pipe shall be full depth of insulation specified.

D. Enclosure/Supports:
1. Shall consist of factory molded and extruded fire retard, modular PVC components. Cover shall have factory made inside and outside corner fittings, end caps, and coupling fittings.
2. Mounting clips shall double as pipe supports.
3. Shall have ASME E 84 of 20 or less and smoke developed of 25 or less.
4. Shall be L shaped for ceiling wall corners.
5. Acceptable Products:
DecoShield Pipe Covering System made by:
DecoShield Systems
272 SW 12th Avenue
Deerfield Beach, FL
Phone: 800-873-0894 or 954-725-7665

2.03 ACCESSORIES

A. Hanger Rods: Mild steel continuous threaded.

B. Auxiliary Steel and Trapeze Hangers.
1. Shall be Schedule 40 steel pipe or rolled steel shapes complying with AISC manual.
2. Manufactured struts shall be rolled of 12, 14, or 16 gauge material to meet loading required or as noted on Drawings or otherwise specified. It shall have a hot dipped galvanized or epoxy coating or shall be prime painted.

C. Acceptable Products.
1. B-Line.
2. Uni-strut.
3. Grip Strut.

2.04 ANCHORS

A. Masonry or concrete type for pipe or equipment supports. Shall be wedge type with either studs or National coarse female thread. Alternative type shall be self drilling expansion type. Anchors shall be U. L. listed.

B. Masonry or concrete type for securing escutcheons to masonry shall be "nail-in" type. Unit shall consist of broad head on hollow zinc alloy core with steel drive pin. Provide with dielectric washer.

2.05 EQUIPMENT CURBS AND PADS

A. Cast-in-place concrete shall be 3000 psi portland cement concrete with 6″ x 6″ welded wire mesh fabric or 3/4″ long nylon fibers mixed at a rate of

one pound per cubic yard of concrete. Fibers shall have tensile strength of 130 KSI. Fiber density shall be 34 million fibers per pound.

2.06 FLASHING

A. Flashing for floor drains which are above grade but outside of showers shall be 40 mil PVC in a 4’ x 4’ minimum size. Flashing shall conform to ASTM D4551.

B. Roof flashing for slate roofs shall be preformed and soldered of 2.5 pound per square foot sheet lead. Flashing collar shall extend minimum of 4” around pipe.

2.07 SLEEVES

A. Sleeves for Pipes Through Walls Rated at less than one hour. Schedule 40 PVC or 22 gauge galvanized sheet steel.

B. Sleeves for Pipes Through Walls Rated at one hour or greater or all masonry walls. Schedule 40 or standard weight galvanized steel pipe.

C. Sleeves for pipes through exterior masonry walls. Schedule 40 solid PVC.

2.08 SEALANTS

A. Fire Stopping - Shall comply with UL1479 and ASTM E0814. Shall have an installed F rating of two hours.

B. Fire stopping for metal pipe shall be tube or trowel applicable and shall remain pliable. Material shall be waterproof or paintable with latex paint.

C. Fire stopping for plastic pipe and insulated pipe shall be intumescent type. It shall be capable of expansion of ten times its original volume when contacted with fire temperatures.

D. Exterior moisture sealant - Shall be non-hardening silicone type rated for temperatures of -40 degrees F to 250 degrees F. Material shall be available in white, gray, brown, and black colors. Material shall be sunlight resistant.

E. Interior sealant shall be silicone type rated for temperatures of 0 degrees F to 250 degrees F. Material shall be available in white, clear, gray, brown or black.

F. Sealants used for sealing plumbing fixtures to walls or in showers shall be white silicone rated for temperatures of 200 degrees F. It shall be mildew and fungus resistant and comply with The FDA (Food & Drug Administration) Standard No. 21 and The National Sanitation Foundation (NSF) Standard Rating C2.

G. Manufacturer

		Fire Stop (Metal)	Fire Stop Plastic	Exterior Sealant	Interior Sealant	Fixture Sealant
1.	Tremco	Fyre-shield	Tremstop	Spectrum 2	Spectrum 1	----
2.	3M	Fire Dam	MPS-21	2000 150	FS-195 FS-195	----
3.	General Electric	----	----	SCS1000	SCS1000	1700
4.	Dow Corning	----	----	999A	999A	786
5.	Hilti	FS601	FS611/635	----	----	----
6.	Nelson	CLK	CMP	----	----	----
7.	Rectorseal	Metacaulk	Metacaulk	----	----	----

950 880

2.09 ESCUTCHEONS

A. For piping - Shall be chrome finished split faced plastic.

B. For multiple pipes or where holes are over large or offset.
1. Utilize pre-painted aluminum sheet fabricated to cover entire hole and seal within 1/4" of the pipe or pipe covering.
2. Holes shall be hole sawed or punched. Holes shall be round.

PART 3 - EXECUTION

3.01 APPLICATION

A. Plumbing Pipe:
1. Shall be supported in accord to the Illinois Plumbing Code and this specification.
2. Plastic pipe 2″ and less shall be supported on 5′-0″ centers.
3. Copper tube 1″ and smaller shall be supported independent of fixtures and at a maximum of 5′-0″ centers. Larger copper tube shall be supported at maximum of 10′-0″ centers.
4. Hot and cold water pipes shall be supported with clevis type hangers or on trapeze hangers with cold water pipe. Provide insulation shields where pipe is insulated.
5. Where cold water pipe passes through strut clamps. Provide neoprene inserts or oversized pipe sleeves that pass insulation continuously.

B. Hanger Rod:
1. Hanger rod size shall be: 3/8″ for pipe up to 2″ in size and loads up to 360 lbs; 1/2″ for pipe 2-1/2″ to 3″ and loads up to 600 lbs; 5/8″ for pipe 4″ to 6″ and loads up to 900 lbs.

3.02 PREPARATION

A. Coordination of Trades/Owner:
1. Work with cement finisher and finish floor installer to be sure concrete substrate is acceptable for installation of shower pan.
2. Work with finish floor installer to be sure pan installation is acceptable for installation of tile specified.
3. Locate sleeves in conjunction with concrete and masonry trades. Determine exact elevation and lateral position.
4. At contractors option core drill openings in floors and core drill or cut in sleeves in walls.

B. Grind or fill concrete substrate with epoxy grout to obtain acceptable substrate.

3.03 ANCHORS

A. Use anchors in concrete or masonry walls and floors.

B. Drill hole clean of loose material. Install anchor, flush with surface. Size hole in accord to manufacturers' recommendation. Physically test anchor by pulling against it. Loose anchors will not be accepted.

3.04 PIPE HANGERS AND SUPPORTS

A. Utilize hangers in accord to Application paragraphs.

B. Install hangers to provide minimum 1/2″ space between finished covering and adjacent work.

C. Place hangers within 12″ of each horizontal elbow.

D. Use hangers with 1-1/2″ minimum vertical adjustment.

E. Support vertical piping such that it cannot be deflected more than 1/8" from center by hand pressure.

F. Where several pipes can be installed in parallel and at same elevation, provide multiple or trapeze hangers.

G. Support riser piping independently of connected horizontal piping.

H. Provide copper plated hangers and supports for copper piping. Provide hard neoprene inserts secured with strut. Insert shall completely cover pipe and match insulation thickness as closely as manufactured standards allow.

I. Locate hangers for pipe movement without disengagement of supported pipe.

J. Provide "rough-in" supports in chases. Support pipe from studding. Use copper or PVC straps and wood blocking. Solder type supports shall not be used unless a sample has been submitted to the Architect/Engineer and the Architect/Engineer agrees in writing. Pipes shall be fastened to the wood blocking by copper or nylon straps specified. Use of drop ear elbows and tees is also acceptable.

K. Provide auxiliary steel to span structure where required. Provide in accord to Paragraph 3.06 below.

L. Secure upper attachment from the top side of wood joists and the top or bottom of steel beams.

M. Do not use perforated hangers strap.

3.05 SLEEVES, SEALS, FIRESTOPPING & ESCUTCHEONS

A. Provide firestopping at all new penetrations between floors except as noted.

B. See Architectural Drawings for the location of walls with a fire resistance rating of one hour or greater or which extend continuously to the roof deck.

C. Furnace room walls shall have penetration firestopped as noted below.

D. Size sleeves large enough to allow for movement due to expansion and contraction. Provide for continuous insulation wrapping.

E. Place sleeves in forms at location desired. Locate wall sleeves exactly as desired. If trade installs its own sleeve after masonry work is complete, sleeve shall be mortared tight into wall. Openings installed in existing concrete floors and walls shall be core drilled. Extend sleeves through floors one inch above finished floor level. Caulk sleeves.

F. Where plastic pipe penetrates walls with fire resistance rating of 1 hour or greater pack annulus with intumscent putty. Size sleeve in accord to intumescent putty manufacturer.

G. Where steel or copper pipe penetrates walls with fire resistance rating of 1 hour or greater use fire stopping caulk between pipe and sleeve.

H. Exterior wall penetrations shall be sealed with colored silicone between pipe and sleeve. Pack interior of sleeve with fiberglass batt.

I. Provide escutcheon on exposed interior penetrations. Secure escutcheons into place with bead of sealant under. Wipe away exposed sealant.

J. The annular area pipe which penetrate walls which extend continuously to the roof deck but which are un-rated shall be packed tightly with fiberglass batt, or shall be sealed tightly with caulking.

K. Sleeves passing through slab on grade construction shall be terminated at finish floor level. Sleeves passing through new and existing upper level floors shall terminate 2″ above floor level. Mortar and seal into core drilled openings.

3.06 AUXILIARY STEEL AND EQUIPMENT SUPPORTS

A. Hanging Equipment and Materials:
1. Shall be supported from the top or upper side of wood joists, or from the bottom or top of steel beams.
2. Auxiliary steel shall be manufactured strut, rolled steel shapes or schedule 40 steel piping. Strut shall be sized in accord to the manufacturer's literature unless shown otherwise on Drawings. Rolled shapes or pipe supports shall be in accord to the following chart.

3. Auxiliary Steel Chart (Pipe Diameter and Angle Size)

PIPE SIZE	LOAD POUNDS	30″ SPAN	60″ SPAN	90″ SPAN	120″ SPAN
≤ 3″	≤ 474	1″ 1″x1″x1/4″	1-1/2″ 1-1/2″x1-1/2″x1/4″	2-1/2″ 2″x2″x1/4″	3″ 3″x3″x1/4″
4″	586	1-1/4″ 1-1/2″x1-1/2″x1/4″	1-1/2″ 2″x2″x1/4″	2-1/2″ 3″x3″x1/4″	3″ 3″x3″x5/16″
6″	921	1-1/4″ 1-1/2″x1-1/2″x1/4″	2″ 2″x2″x1/4″	2-1/2″ 3″x3″x1/4″	4″ 4″x4″x1/4″

B. Equipment supports shall be as shown on drawings, and specified.

3.07 EQUIPMENT CURBS AND PADS

A. Concrete pads shall be sized to be a minimum of 6″ larger than the length and width dimensions of equipment.

B. Concrete pads shall be a minimum of 3-1/2″ thick and shall be placed upon concrete floor. Dowell into existing floors at a minimum of two locations. Remove form boards and chamfer sharp edges.

3.08 FLASHING

A. Install drain pans over thinset mastic. Provide uniform adherence under the entire drain pan. Turn edges up walls at least 3″ above finished shower floor.

B. Install lead vent flashings at plumbing vents on slate roofs. Wrap lead flashings minimum of 1″ into pipe. The cutting of the lead flashing into existing slate roofs shall be done in a manner similar to existing flashing now installed.

C. Provide floor flashings at each above grade floor drain where finish floors in excess of finished deck are provided. Center drain into

flashing and secure to drain with clamping collar. Lay flashing flat on deck and secure with continuous bed of compatible mastic. Upper finish shall be installed by finish trades.

END OF SECTION 220529

SECTION 220553 – IDENTIFICATION FOR PLUMBING PIPE AND EQUIPMENT

PART 1 - GENERAL

1.01 WORK INCLUDES

A. Base Bid:
   1. Contractor Provide:
      a. Pipe stencils and labels.
      b. Valve tags.
      c. Equipment labels.

1.02 RELATED WORK

A. Specified Elsewhere.
   1. 220700 – Plumbing Insulation.
   2. 221100 – Domestic Water Piping.
   3. 221300 – Sanitary Piping.
   4. 221329 – Sanitary Sewage Pumps.
   5. 221400 – Storm Drainage Piping.
   6. 223300 – Water Heaters

1.03 REFERENCES

A. ANSI B13.1 - Scheme for the Identification of Piping Systems.

1.04 SUBMITTALS

A. Submit under provisions of Section 013300.

B. Submit list of wording, symbols, letter size, and color coding for mechanical identification.

C. Product Data: Provide manufacturers catalog literature for each product required.

D. Manufacturer's Installation Instructions: Indicate special procedures, and installation.

PART 2 - PRODUCTS

2.01 MANUFACTURER & PERFORMANCE

A. Unless otherwise specified the manufacturer’s number specified or scheduled is listed merely as an aid to prospective bidders. In most cases it is an incomplete number and relies upon the written description to fully define the item. Where model numbers define a single manufactured item which does not include the items include in the written description, the model number shall be modified as required to most closely meet the described requirements.

2.02 NAMEPLATES

A. Description: Laminated three-layer plastic with engraved black letters on light contrasting background color. Lettering shall be 1/4″ tall. Placard size shall accommodate message without abbreviation. Placard shall be rectangular. Multiple lines shall be utilized to minimize length to height ratio.

2.03 PIPE LABELS

A. Shall have flexible PVC or vinyl backer at either snaps over pipe or is strap-on with draw ties, or glues to itself.

B. Background shall be yellow.

C. Letters shall be nominally 1/2″ for pipe up to 1″; 3/4″ for outside diameters up to 2-3/8″ and 1-1/4″ tall for larger pipe.

D. Acceptable Manufacturers:
1. Brady - Bradysnap/strap-on.
2. EMED - Kwik Coil/wrap-around.
3. Seton - Setmark/markers-on-a-roll.

2.04 VALVE LABELS

A. Shall be white nylon, metal, or vinyl “write-on” type with draw band attachment in 2″ x 3″ to 3″ x 5″ size.

B. Label shall identify space valve serves. I.E., "Public toilets"; "Family toilet” and “staff toilet"; “main water shut-off”. Lettering shall be typed or neatly lettered manually with an indelible black pen. Numbered tags and framed schedule are absolutely not wanted and will not be accepted as a substitute for specified tags.

C. Acceptable Products:
1. Emedco Jumbo Tag Seal
2. Brady 65000 Series
3. Seton Write on Tag

PART 3 - EXECUTION

3.01 PREPARATION

A. Sand or steel wool ferrous pipe smooth removing factory applied lacquer coatings. Wipe free of dust.

A. Painted, paper or rubber surfaces shall be wiped clean. Use solvent as recommended by insulation manufacturer where it applies.

C. Clean wire ends free of lubricants and dirt.

3.02 INSTALLATION

A. Install plastic nameplates with corrosive-resistant mechanical fasteners.

B. Identify plumbing equipment with plastic nameplates. Use names provided by Owner or as shown on Drawings.

C. Identify valves in equipment rooms which are remote from the spaces and devices they control. Use names as determined by the Owner or as otherwise specified.

D. Identify piping, concealed or exposed, with pipe labels or . Use names which match those already in use by Owner. If existing pipe is not labeled match those shown on Drawings. Install in clear view and align with axis of piping. Locate identification on each side of wall penetrations and near each equipment take off. Locate on minimum of 50’-0″ centers on straight runs without branches and take-offs.

END OF SECTION 220553

SECTION 220700 – PLUMBING INSULATION

PART 1 - GENERAL

1.01 WORK INCLUDES

A. Base Bid:
1. Contractor Provide:
   a. Insulation of domestic and non-potable water piping.
   b. Insulation on sanitary pipe serving upper floor toilet rooms.
   c. PVC Insulation pipe covering as noted on Drawings as specified.

1.02 RELATED WORK

A. Specified Elsewhere:
1. 225290 – Supports and Anchors for Plumbing.
2. 220553 – Identification for Plumbing Piping and Equipment
3. 221100 – Domestic Water Piping.

1.03 SYSTEM DESCRIPTION

A. Definitions:
1. Domestic water piping includes hot, cold, return, high temperature, and chilled potable water piping.
2. Non-potable water pipe includes cold water pipe down stream of a back flow prevention device.
3. Sanitary piping includes waste and vent piping above and below floors.

B. Description:
1. Sanitary pipe which serves upper level water closets shall be insulated

1.04 QUALITY ASSURANCE

A. Material shall have listings of Nationally recognized tested agencies stamped on material or packing containers.

B. Inspect finished insulation to assure specified tolerance is met. A/E will verify. If A/E notes tolerances are exceeded, entire system shall be re-inspected and corrections made.

1.05 REGULATORY REQUIREMENTS

A. ASTM C177 - Steady-State Heat Flux Measurements and Thermal Transmission Properties by Means of the Guarded-Hot-Plate Apparatus.

B. ASTM C534 - Preformed Flexible Elastomeric Cellular Thermal Insulation in Sheet and Tubular Form.

C. ASTM C547 - Standard Specification for Mineral Fiber Preformed Pipe Insulation.

D. ASTM D1667 - Flexible Cellular Materials - Vinyl Chloride Polymers and Copolymers (Closed Cell Foam).

E. ASTM E84 - Surface Burning Characteristics of Building Materials.

F. ASTM E96 - Water Vapor Transmission of Materials.

G. ASHRAE 90-1-2007 - Energy Efficient Design of New Buildings Except Low Rise Residential Buildings.

H. International Energy Conservation Code 2012.

1.06 SUBMITTALS

A. Submit under provisions of Section 013300.

B. Product Data: Provide product description, list of materials and thickness for each service, and locations. Show compliance with all specified standards. Show K-Value, maximum temperature, permeability, surface burning characteristics, flame spread and smoke density. Provide MSDS sheets for adhesives and paints. Show material is asbestos free. Submit product data for covers and accessories.

C. Manufacturer's Installation Instructions: Indicate procedures which ensure acceptable workmanship and installation standards will be achieved.

D. Provide name of insulating contractor and value of insulation work on Contractors Schedule of Values.

1.07 QUALIFICATIONS

A. Installer: Workman skilled in performing the work of this section.

1.08 DELIVERY, STORAGE, AND HANDLING

A. Deliver materials to site in original factory packaging, labeled with manufacturer's identification, including product density fire ratings and thickness. Keep separated.

B. Store insulation in original wrapping and protect from weather and construction traffic.

C. Protect insulation against dirt, water, chemical, and mechanical damage.

1.09 ENVIRONMENTAL REQUIREMENTS

A. Maintain ambient temperatures and conditions required by manufacturers of adhesives, mastics, and insulation cements.

B. Maintain temperature during and after installation for minimum period of 24 hours.

PART 2 - PRODUCTS

2.01 MANUFACTURER & PERFORMANCE

A. Unless otherwise specified the manufacturer’s number specified or scheduled is listed merely as an aid to prospective bidders. In most cases it is an incomplete number and relies upon the written description to fully define the item. Where model numbers define a single manufactured item which does not include the items include in the written description, the model number shall be modified as required to most closely meet the described requirements.

2.02 FIBERGLASS

A. Shall conform to ASTM C547 Type 1, at 100 degrees F. K-value shall be no more than .25 BTU/hr/in degrees F. Material shall be rated for temperatures up to 650 degrees F. Jacket or insulation shall not promote microbial growth per ASTM C 1338.

B. Vapor barrier shall be fiberglass reinforced foil faced scrim craft paper. Jacket permeance shall be limited to .02 perm, per ASTM E96 procedure A.

C. Flame spread shall be no more than 25. Smoke developed rating shall be no more than 50. These per ASTM E 84.

D. Accessory elbow and pipe covers shall be .02" thick PVC with flame spread and smoke developed ratings as noted above. Color shall be white.

E. Insulation shall be premolded to thickness listed in application table. Vapor barrier shall have pre-glued adhesive strips. If staples are required by the manufacturer, the system shall include a vapor barrier cover for the staples.

F. Acceptable Products:

	Insulation	Covers
1. Knauf	1000 degrees pipe insulation	---
2. Schuller	Micro-Lok	---
3. Owen-Corning	SSL-II	---
4. Proto	---	---
5. Zeston	---	Losmoke Covers

PART 3 - EXECUTION

3.01 ENVIRONMENTAL CONDITIONS

A. Work shall be done when temperatures are within the limits set by the manufacturer.

3.02 PREPARATION

A. Verify that piping has been tested before applying insulation materials.

B. Verify that surfaces are clean, foreign material removed, and dry.

3.03 INSTALLATION

A. Install materials in accordance with manufacturer's instructions.

B. On exposed piping, locate insulation and cover seams in least visible locations.

C. Insulated cold pipes conveying fluids below ambient temperature: (cold water and sanitary pipe above grade).
1. Maintain vapor barrier, align insulation and seal without gaps.
2. Insulate fittings, joints, and valves with insulation of like material and thickness as adjacent pipe. Miter angles.
3. Continue insulation through walls, sleeves, pipe hangers, and other pipe penetrations.
4. Insulate entire system including fittings, and valves.
5. Seal inserts at strut supports to adjacent insulation.

D. For insulated pipes conveying fluids above ambient temperature: (Hot water and hot water return).
1. Where pipe is exposed insulate in same manner as for cold water, except that valves and unions need not be covered.
2. Within ceiling spaces and chases insulate main piping and branch piping. Valves, fittings, and unions need not be insulated.

E. Provide galvanized shields at all pipe hangers.

F. Finish insulation at supports, protrusions, and interruptions.

G. Provide PVC elbow covers on all insulated pipe. Provide linear PVC insulated pipe covering on all pipe noted on drawings.

3.04 APPLICATION

	PIPING SYSTEMS	INSULATION TYPE Inch	PIPE SIZE	THICKNESS Inch
A.	Domestic hot water, and hot water return pipe.	Fiberglass	All Sizes	1″
B.	Circulating Domestic Hot Water.	Fiberglass	Any Size	1″
C.	Domestic Cold Water Pipe and Non-potable Water.	Fiberglass	4″ and less	1/2"
D.	Sanitary Pipe Above Grade.	Fiberglass	4″ and less	1/2″

3.05 FIELD QUALITY CONTROL

A. No gaps will be allowed in cold pipe insulation. No more than 1-12" x 1/16" gap per 100 feet of insulated hot pipe will be allowed.

END OF SECTION 220700

SECTION 221100 - WATER PIPING

PART 1 - GENERAL

1.01 WORK INCLUDES

A. Base Bid:
   1. Plumbing Contractor Provide:
      a. New domestic water service.
      b. Revision and extension of domestic water piping.
      c. New domestic water pipe and non-potable water pipe.
      d. Installation of backflow preventer.
      e. Exploration work to locate existing underfloor and underground water mains including depth and horizontal location.
      f. All cutting and patching of existing concrete slabs to access existing piping.
      g. All utility connection fees and city deposits required for connection of new water service.

B. Alternate Bids:
   1. Plumbing Contractor Provide:
      a. Water piping required to.

1.02 DESCRIPTION

A. Definitions
   1. Domestic Water - Includes hot, cold and hot water return.
   2. Plumbing Contractor = Plumbing Subcontractor or Plumbing Trade.
   3. Domestic water mains is that piping used in corridors to convey water to points of use.
   4. Domestic water branch pipe is that pipe used in rooms with fixtures.

B. Description:
   1. Base bid domestic water piping shall include:
      a. Extension of water service into building including thrust blocking fittings and connections.
      b. Water distribution piping to all fixtures and locations noted in Sections.
   2. Alternate bid items:
      a.

1.03 RELATED WORK

A. Specified Elsewhere:
   1. 220529 – Supports and Anchors for Plumbing.
   2. 220553 – Identification for Plumbing Piping and Equipment.
   3. 220700 – Plumbing Insulation.
   4. 221110 – Domestic Water Piping Specialties.
   5. 224000 – Plumbing Fixtures.
   6. 221120 – Domestic Water Equipment.
   7. 223300 – Water Heaters.

1.04 REFERENCES

A. ANSI B31.9 - Building Service Piping.

B. ASME B16.3 - Malleable Iron Threaded Fittings.

C. ASME B16.22 - Wrought Copper and Bronze Solder-Joint Pressure Fittings

D. ASTM A47 - Ferritic Malleable Iron Castings.

E. ASTM A53 - Pipe, Steel, Black and Hot-Dipped Zinc Coated, Welded and Seamless.

F. ASTM A120 - Pipe, Steel, Black and Hot-Dipped Zinc Coated (Galvanized), Welded and Seamless, for Ordinary Uses.

G. ASTM B32-92 - Solder Metal.

H. ASTM B88 - Seamless Copper Water Tube.

I. ASTM D1784 - Rigid Poly (Vinyl Chloride) (PVC) Compounds and Chlorinated Poly (Vinyl Chloride) (CPVC) Compounds

J. ASTM D1785 - Poly Vinyl Chloride (PVC) Plastic Pipe, Schedules 40, 80, and 120.

K. ASTM D2464 - Threaded Poly (Vinyl Chloride) (PVC) Plastic Pipe Fittings, Schedule 80.

L. ASTM D2466 - Poly Vinyl Chloride (PVC) Plastic Pipe Fittings, Schedule 40.

M. ASTM D2467 - Socket-Type Poly (Vinyl Chloride) (PVC) Plastic Pipe Fittings Schedule 80.

N. ASTM D2564 - Solvent Cements for Poly Vinyl Chloride (PVC) Plastic Pipe and Fittings.

O. ASTM D2855 - Making Solvent-Cemented Joints with Poly Vinyl Chloride (PVC) Pipe and Fittings.

P. ASTM F441 - Chlorinated Poly (Vinyl Chloride) (CPVC) Plastic Pipe, Schedules 40 and 80.

Q. ASTM F437 - Threaded Chlorinated Poly (Vinyl Chloride) (CPVC) Plastic Pipe Fittings, Schedule 80.

R. ASTM F439 - Socket-Type Chlorinated Poly (Vinyl Chloride) (CPVC) Plastic Pipe Fittings, Schedule 80.

S. ASTM D-2666 - Polybutylene water service cold water pipe and tubing.

T. AWWA C110 - Ductile - Iron and Gray - Iron Fittings 3 in. through 48 in., for Water and Other Liquids.

U. AWWA C111- Rubber-Gasket Joints for Ductile Iron and Gray-Iron Pressure Pipe and Fittings.

V. AWWA C151 - Ductile-Iron Pipe, Centrifugally Cast in Metal Molds or Sand-Lined Molds, for Water or Other Liquids.

1.05 SUBMITTALS

A. Submit under provisions Section 013300 (1.05 and Paragraph 6.00 of the General Conditions).

B. Product Data: Provide data on valves and piping accessories. Provide manufacturers catalog information. Indicate valve data and ratings.

C. Shop Drawings:

1. Provide plan layouts of underfloor piping and above floor piping. Show sizes. Piping shall be shown on same plan where paper space permits. Show separate plans for underfloor and above floor piping in toilet rooms and equipment rooms.
2. Shall be drawn at a minimum scale of 1/8″ per foot.
3. Single copies of blank floor plans will be available on paper or in AutoCad 2004 disc format for the successful bidder’s use.
4. Plans shall show relationship to walls and footings.

D. Tests:
1. Provide a witnessed pressure test of water piping. Test as required by the Illinois Plumbing Code.
2. Provide an original copy of the bacteriological report required by the Illinois Plumbing Code.

E. Schedule of Values:
1. Provide a separate dollar value of all water piping work used on this job as part of the Schedule of Values.

1.06 PROJECT RECORD DOCUMENTS

A. Submit under provisions of Section 017839 (1.07) (the General Conditions).

B. Record actual locations of valves. Record lateral and vertical locations of underfloor and underground pipe. Locate in relation to walls and surfaces which extend beyond concealing surfaces. Record locations of valves concealed above ceilings on the reflected ceiling plan or light fixture plan or sprinkler plan.

C. Obtain A/E review of record documents before or at each pay progress meeting.

1.07 QUALITY ASSURANCE

A. Valves: Manufacturer's name and pressure rating marked on valve body.

1.08 REGULATORY REQUIREMENTS

A. Perform Work in accordance with State of Illinois Plumbing Code and/or the BOCA National Plumbing Code 1993.

1.09 DELIVERY, STORAGE, AND HANDLING

A. Deliver, store, protect and handle products to site under provisions of Section 016000 (Paragraph 16 of the General Conditions).

B. Accept valves on site in shipping containers with labeling in place. Inspect for damage.

C. Provide temporary end caps and closures on piping and fittings. Maintain in place until installation.

D. Protect piping systems from entry of foreign materials by temporary covers, completing sections of the work, and isolating parts of completed system.

1.10 ENVIRONMENTAL REQUIREMENTS

A. Do not install underground piping when bedding are wet or frozen.

B. Do not utilize solvent weld products when dry wall sanding is underway.

1.11 DESIGN PARAMETERS

A. Domestic Water Pipe:
1. Shall be laid out and sized in accord to the Illinois Plumbing Code.
2. Hot water supply pipe sizes shall be minimized where there is not pumped circulation.
3. Pipe shall be routed parallel to the lines of the building.
4. Provide hot water return pipe at furthest fixture from gas water heater. Size pipe such that pump flow and head parameters specified are not exceeded.
5. Pipe shall be concealed wherever drywall or new masonry partitions exist. Pipe shall be surface mounted on existing concrete and masonry.
6. Provide isolation valves upstream of each toilet room array to isolate that array from the remaining system.

PART 2 - PRODUCTS

2.01 MANUFACTURER & PERFORMANCE

A. Unless otherwise specified the manufacturer’s number specified or scheduled is listed merely as an aid to prospective bidders. In most cases it is an incomplete number and relies upon the written description to fully define the item. Where model numbers define a single manufactured item which does not include the items include in the written description, the model number shall be modified as required to most closely meet the described requirements.

2.02 WATER PIPING (BURIED)

A. Ductile Iron Pipe: AWWA C151.
1. Fittings: Ductile or gray iron, standard thickness.
2. Joints: AWWA C111, rubber gasket with 3/4” diameter rods.

B. C-900 PVC certified by NSF:
1. Fittings: Ductile or grey iron, standard thickness.
2. Joints: AWWA C111, rubber gasket with rods.

C. Polyethylene Tubing: Shall be copper tube size rated for 200 psi. Tubing shall be SDR 9 and shall meet requirements of ASTM D-2737 and national Sanitation Foundations requirements for potable water. Fittings shall be compression type with stiffener inserts.

D. Polyethylene Tubing: Shall be copper tube size rated for 160 psi. Tubing shall be PE 3408 SDR 9 and shall meet requirements of ASTM D-2239 and National Sanitation Foundations requirements for potable water. Fittings shall be insert type with stainless steel hose clamp.

E. Acceptable Products:
1. Vanguard Plastics.
2. Cresline - Equal.

2.03 FIRE EXTINGUISHING

A. Ductile Iron Pipe: AWWA C151.
1. Fittings: Ductile or grey iron, standard thickness.
2. Joints: AWWA C111, rubber gasket with 3/4" diameter rods.

B. C-900 PVC Certified by NSF:
1. Fittings: Ductile or grey iron, standard thickness.

2. Joints: AWWA C111, rubber gasket with rods.

2.03 WATER PIPING, ABOVE GRADE

A. Copper Tubing: ASTM B88, Type L, hard drawn.
1. Fittings: ASME B16.18, cast bronze, or ASME B16.22, wrought copper and bronze.
2. Joints: ASTM B32-92, solder, lead-free and antimony-free.
3. Acceptable Products: Solder
a. Taracorp Tarament Sterling.
b. Oatey Silver.
4. At Contractor's option fittings shall be wrought copper press connected type with EPDM "O"-Ring type gaskets. Fittings shall have indicators that verify connections have been made.
5. Acceptable Products:
a. Viega ProPress.

B. PVC Pipe:
1. Pipe shall meet ASTM Standards, D1784, D1785 and D2462.
2. Fittings shall meet ASTM requirements of D1784, D2467 or D2464.

C. CPVC Pipe:
1. Pipe shall meet ASTM Standards D1784 and F441.
2. Fittings shall meet ASTM Standards D1784, F437 and F439.
3. Adaptors shall be threaded male type with brass threads and socket type CPVC cement type insert.

D. PVC and CPVC Pipe:
1. Joints shall be solvent cement for runs over 12" long and threaded where close coupling is required or valves are installed.

2.04 FLANGES, UNIONS, AND COUPLINGS

A. Pipe Size 2″ and Under:
1. Ferrous pipe: 150 psig malleable iron threaded unions.
2. Copper tube and pipe: 150 psig bronze unions with soldered joints.

B. Pipe 1-1/4" and smaller shall utilize CPVC solvent welded or threaded standard unions with free-spinning union nuts.

C. Pipe 1-1/2" to 2" shall utilize PVC solvent weld or unions.

D. Pipe 2-1/2" and larger shall utilize PVC "Van-Stone" flanges with solvent weld connections.

E. Dielectric Connections: Brass flange with copper solder end, gaskets, dielectric flange bolt inserts, washers and stainless steel bolts.

2.05 VALVES

A. Ball Valves up to and including 3″: Bronze 600# wog, 150# swp two piece body, stainless steel or chrome plated full port bronze ball, teflon seats and stuffing box ring, lever handle, solder or threaded ends.

B. Swing Check up to and including 2″: Bronze body rated for 150 # wog with wye configuration, bronze disc, integral seat and threaded or solder ends.

C. Vertical Check: Bronze body rated for 200 psig with straight configuration, soft seat, stainless steel or bronze spring and bronze plug.

D. Acceptable Products:

		Ball	Swing Check	Vertical Check
1.	Apollo	Model 77 Series	---	61-500 Series
2.	Watts	Model 6800 Series	WCV	---
3.	Milwaukee	Model BA 400 Series	515	---
4.	Nibco	Model T-585 Series	T-453	T-480

E. Plastic ball valves 1-1/4" and smaller shall be CPVC with union nuts on both ends and either threaded or socket solvent weld connections at the contractors option. Valve shall have full port design Teflon seats, lever handle with stein extension for specified insulation and EPDM o-ring seals.

F. Plastic ball valves 1-1/2" and 2" shall be PVC with union nuts on both ends and socket solvent weld connections. Valve shall have full port design, Teflon seats, EPDM o-rings seals, and lever handle with stem extension for specified insulation.

G. Plastic ball valves 3" and larger shall have metal locking lever handle, flanged connections, Teflon seals, stem extension for 1" thick insulation, EPDM o-ring seals.

H. Acceptable Products:
1. NIBCO Chemtrol Tru-Bloc.

2.06 WATER SERVICE DEVICES

A. General Requirements
1. All devices shall be rated for use with potable water at pressures of 150 psig.
2. All devices shall meet standards of the National Sanitation Foundation (NSF) and the American Water Works Association (AWWA).

B. Tapping Sleeve shall be split body type sized to match existing main. Outlet shall be flanged to match valve.

C. Corporation stops shall have bronze bodies with tapered bronze male inlet 1/4 turn tapered plug valve and compression outlet. Operator shall be a rectangular head.

D. Tapping saddle shall be sized for main pipe and consist of two brass bands hinged to a cast bronze saddle with stainless steel or brass adjustment screws. Casting shall be tapped for corporation stop.

E. Corporation stop and saddle shall be capable of accepting wet tap drill rig.

F. Curb stop shall have bronze body tapered 1/4 turn plug and compression ends for CTS tubing. Operator shall be rectangular or square.

G. Valve box shall be three piece type which utilizes 1-1/4” pipe to accommodate bury depth. Extension pipe shall be schedule 40 galvanized steel. Top shall have holes for spanner wrench operation; it shall be cast iron with bronze threaded insert. Lower element shall be bell shaped with cut out to accommodate curb stop. Furnish with 6’-0” combination fee handle to fit valve operator and spanner holes.

H. Valve
1. Construction shall be cast iron with epoxy coated interior and exterior Seals shall be Bunna-N-Rubber.

2. Configuration shall be resilient wedge gate type with none rising stem.
3. Connections shall be flanged by mechanical joint type.
4. Operator shall be 1-1/4″ square nut above a cast iron support plate. Provide with 1 “Tee” handle wrench of an 8′-0″ length.

I. Valve Box
1. Shall be of cast iron construction.
2. Configuration shall be adjustable height type.
3. Lid shall be bolt on type cast lid. Lid shall be “water” cast in its upper surface.

2.07 STRAINERS

A. Shall be bronze construction acceptable by NSF. Strainer screen shall be No. 20 stainless steel mesh. Pressure rating shall be 150 psig.

B. Sizes 2″ and smaller shall have female NPT ends.

C. Acceptable Products:
1. Hammond 3010
2. Conbraco 85-5-5-5 Series
3. Watts Series 777

PART 3 - EXECUTION

3.01 EXAMINATION

A. Examine areas and conditions under which plumbing piping is to be installed.

B. Verify excavations are free of debris or stones.

C. Verify that excavations are to required grade, dry, and not over-excavated.

D. Verify existing piping at new connection points is in sound condition.

E. Verify placement of fixtures and equipment to determine locations of rough-in connections.

F. Correct any unsatisfactory conditions before beginning installing piping products of this section. Commencement of installation indicated acceptance of conditions.

3.02 PREPARATION

A. Ream pipe and tube ends. Remove burrs. Bevel PVC pipe.

B. Remove scale and dirt, on inside and outside, before assembly.

C. Prepare piping connections to equipment with flanges or unions.

D. Valves:
1. Remove shipping materials.
2. Examine valve (interior and exterior) to verify that valve is clean and corrosion free.
3. Verify that valves operable through full open and close positions.
4. Inspect mating flange surfaces. Verify bolt sizes, materials, and lengths. Verify that gaskets are free of defects, properly sized, and composed of correct material.

3.03 DEMOLITION

A. Removal for reuse.
   1. Disconnect existing piping where new piping is shown for reconnection carefully by dis-assembling joints or by squarely cutting, for rethreading, soldering or otherwise connecting.
   2. Cap open end of pipe temporarily if to be reused or permanently if not shown for reuse.

B. Flooring Cutting:
   1. Existing concrete floors shall be saw cut at least 2 inches through before concrete material is broken up and removed.
   2. Do not use gasoline powered saws unless room is isolated from rest of building ducted ventilation is provided, and Owners permission is obtained.
   3. Minimize extent of removal work; however, provide sufficient removal to access piping.

3.04 EXCAVATION, BEDDING AND BACKFILL

A. Excavate existing fill and material to locate existing piping and to install new. Granular materials shall be saved for reuse providing it is not polluted with mud or building debris.

B. Install new underfloor piping on compacted granular cradle bedding. Install at least 3 inches of bedding above top of pipe. Use clean p-gravel or sand as bedding.

C. Remaining backfill shall be what was removed from excavation less debris or shall be bedding material.

D. On concrete cuts over 24" wide, perpendicularly drill edges of cut on 24 inches centers and install No. 4 rebar at mid-point of slab depth.

3.05 INSTALLATION

A. Install in accordance with manufacturer's instructions.

B. Provide non-conducting dielectric connections wherever jointing dissimilar metals.

C. Route piping in orderly manner and maintain gradient.

D. Install piping to conserve building space and not interfere with use of space. Install pipe parallel or at right angles to building walls. Diagonal runs shall be as shown on drawings.

E. Group piping whenever practical at common elevations.

F. Install piping to allow for expansion and contraction without stressing pipe, joints, or connected equipment. Install fittings at changes in direction. Install swing joints at branch connections to mains.

G. Conceal pipe where new chases and walls and firring are provided. Pipe on existing wall is exposed.

H. Connecting components of unequal size: Install standard reducers or increasers, correctly sized for application indicated.

I. Clearances:

1. Provide adequate space around piping to allow proper application of insulation.
2. Finished piping insulation minimum clearance: 1″, all around.

J. Support and anchor pipe as specified in Section 220529.

K. Joints:
1. PVC pipe:
a. Solvent-welded joints:
1) Conform to requirements of ASTM D 2855.
2. Copper Pipe:
a. Press Fittings:
1) Shall be made in accord with fitting manufacturer's instruction using tools recommended by that manufacturer.
b. Sweat Fittings:
1) Solder shall be full depth of fitting socket.
2) Joints shall be "wiped" and form a neat fillet.

L. Domestic Water Piping System:
1. Install on interior side of building insulation. Do not install in ventilated attics or crawl space unless called out on drawings.
2. Pitch: 1/32″-per-foot (1/4 percent) or greater to drain point. Do not trap. Provide valves at drain point.
3. General-purpose valves:
a. Install valves with stems horizontal or above horizontal. Do not install inverted.
b. Position valves to allow easy access. Provide additional support where required.
c. Provide valves as shut offs to all equipment and as indicated.
d. Allow clearance for insulation at handles.
4. Connections:
a. Piping runouts to fixtures: Install runouts to fixtures. Size piping, as required.
b. Mechanical equipment: Provide connections to equipment as required.
5. Install underground piping as single continuous piece within PVC sleeve with long sweep 90 degrees els to above the floor. Install without kinking.

M. Underground Water Service Pipe:
1. Do work in accord to (Illinois American Water Co.) (Village of) standards.
2. Use PVC (ductile iron) pipe specified. All fittings shall be ductile iron.
3. Provide concrete thrust block at all changes in direction.
4. Make connection to existing main with split “tee” connection. Set valve and make live tap.
5. Set valve box on 6″ concrete footing under pipe. Extend to level grade. Provide minimum of 24″ x 24″ x 6″ deep concrete around upper portion of valve box.
6. Patch remaining surface to match existing construction in thickness and type.
7. Terminate service pipe 6″ above floor with mechanical flange and opposing reducing flange. Provide ball valve just above flange. Riser shall be sleeved through the floor.
8. Provide continuous mylar ribbon specified in Section 220553 above piping at 16″ below grade.

3.06 APPLICATION

A. Install unions downstream of valves and at equipment or apparatus connections. Use in accessible locations only.

B. Install valves for shut-off to isolate equipment and in vertical risers. See drawings for other locations.

C. Application Chart:

Use Description	Pipe Type	Fitting Type
1. Domestic Water and Fire Service Risers	Ductile Iron	Mechanical Joint Ductline Iron
2. Underground Domestic Water Service	Ductile Iron or C-900 PVC 200 psi Polyethylene	Mechanical Joint Ductile Iron Compression Connectors
3. Domestic Water Pipe (Above ground)	Copper	Sweat Solder
4. Domestic Water 1-1/4" and Smaller	Schedule 80 CPVC	Threaded or Solvent Weld
5. Domestic Water Pipe 1-1/2" and Larger	Schedule 80 PVC	Solvent Weld

3.07 ERECTION TOLERANCES

A. Slope water piping and arrange to drain at low points.

3.08 DISINFECTION OF DOMESTIC WATER PIPING SYSTEM.

A. Do in accord with the Illinois Plumbing Code.

3.09 SERVICE CONNECTIONS

A. Provide new water service complete with water meters.
   1. Provide 18 gage galvanized sheet metal sleeve around service main to 6″ above floor. Size in accord to riser details.

3.10 REQUIRED CONNECTIONS AND LOCATIONS

A. Domestic Water Piping:
   1. Equipment connections to water heaters and water softener per Sections 221120 and 223300.
   2. Fixture connections per Section 224000.
   3. Hot water connection to humidifier in computer room air conditioners. Provide 3/4″ pipe with 1/2″ ball valve. Leave pipe runout uninsulated. Use hot water pipe serving shower rooms.
   4. Cold water connection to ice maker/refrigerator in lunchroom. Provide 1/2″ ball valve and fittings to connect 1/8″ flexible tubing to refrigerator. Connect the refrigerator after Owner moves it in. Provide tubing kit.
   5. Connection to hydrants as noted in Section 221120.
   6. Provide hot water return piping between the gas water heater, the domestic water circulation pump and the lavatory furthest from the heater.

END OF SECTION 221100

SECTION 221100 - WATER PIPING

PART 1 - GENERAL

1.01 WORK INCLUDES

A. Base Bid:
   1. Contractor Provide:
      a. New domestic water services for domestic water and irrigation water.
      b. New domestic water pipe and non-potable water pipe.
      c. Installation of backflow preventers.
      d. Exploration work to locate existing underground water mains including depth and horizontal location.
      e. All cutting and patching of existing concrete slabs and asphalt roadways to access existing piping.
      f. All utility connection fees required for connection of new water services.

1.02 DESCRIPTION

A. Definitions
   1. Domestic Water - Includes hot, cold and hot water return.
   2. Plumbing Contractor = Plumbing Subcontractor or Plumbing Trade.
   3. Domestic water mains is that piping used in corridors and across building to convey water to points of use.
   4. Domestic water branch pipe is that pipe used in rooms with fixtures.

1.03 RELATED WORK

A. Specified Elsewhere:
   1. 220529 – Supports and Anchors for Plumbing.
   2. 220553 – Identification for Plumbing Piping and Equipment.
   3. 220700 – Plumbing Insulation.
   4. 221110 – Domestic Water Piping Specialties.
   5. 224000 – Plumbing Fixtures.
   6. 223300 – Water Heaters.

1.04 REFERENCES

A. ANSI B31.9 - Building Service Piping.

B. ASME B16.3 - Malleable Iron Threaded Fittings.

C. ASME B16.22 - Wrought Copper and Bronze Solder-Joint Pressure Fittings

D. ASTM A47 - Ferritic Malleable Iron Castings.

E. ASTM A53 - Pipe, Steel, Black and Hot-Dipped Zinc Coated, Welded and Seamless.

F. ASTM A120 - Pipe, Steel, Black and Hot-Dipped Zinc Coated (Galvanized), Welded and Seamless, for Ordinary Uses.

G. ASTM B32-92 - Solder Metal.

H. ASTM B88 - Seamless Copper Water Tube.

I. ASTM D1784 - Rigid Poly Vinyl Chloride (PVC) Compounds and Chlorinated Poly Vinyl Chloride (CPVC) Compounds

J. ASTM D1785 - Poly Vinyl Chloride (PVC) Plastic Pipe, Schedules 40, 80, and 120.

K. ASTM D-2737 - Polyethylene water service cold water pipe and tubing.

L. AWWA C110 - Ductile - Iron and Gray - Iron Fittings 3 in. through 48 in., for Water and Other Liquids.

M. AWWA C111- Rubber-Gasket Joints for Ductile Iron and Gray-Iron Pressure Pipe and Fittings.

N. AWWA C151 - Ductile-Iron Pipe, Centrifugally Cast in Metal Molds or Sand-Lined Molds, for Water or Other Liquids.

1.05 SUBMITTALS

A. Submit under provisions Section 013300.

B. Product Data: Provide data on valves and piping accessories. Provide manufacturers catalog information. Indicate valve data and ratings.

C. Tests:
1. Provide a witnessed pressure test of water piping. Test as required by the Illinois Plumbing Code.
2. Provide an original copy of the bacteriological report required by the Illinois Plumbing Code.

D. Schedule of Values:
1. Provide a separate dollar value of all water piping work used on this job as part of the Schedule of Values.

1.06 PROJECT RECORD DOCUMENTS

A. Submit under provisions of Section 017839.

B. Record actual locations of valves. Record lateral and vertical locations of underfloor and underground pipe. Locate in relation to walls and surfaces which extend beyond concealing surfaces. Record locations of valves concealed above ceilings on the reflected ceiling plan.

C. Obtain A/E review of record documents before or at each pay progress meeting.

1.07 QUALITY ASSURANCE

A. Valves: Manufacturer's name and pressure rating marked on valve body.

1.08 REGULATORY REQUIREMENTS

A. Perform Work in accordance with State of Illinois Plumbing Code.

1.09 DELIVERY, STORAGE, AND HANDLING

A. Deliver, store, protect and handle products to site under provisions of Section 016000.

B. Accept valves on site in shipping containers with labeling in place. Inspect for damage.

C. Provide temporary end caps and closures on piping and fittings. Maintain in place until installation.

D. Protect piping systems from entry of foreign materials by temporary covers, completing sections of the work, and isolating parts of completed system.

1.10 ENVIRONMENTAL REQUIREMENTS

A. Do not install underground piping when bedding are wet or frozen.

PART 2 - PRODUCTS

2.01 MANUFACTURER & PERFORMANCE

A. Unless otherwise specified the manufacturer’s number specified or scheduled is listed merely as an aid to prospective bidders. In most cases it is an incomplete number and relies upon the written description to fully define the item. Where model numbers define a single manufactured item which does not include the items include in the written description, the model number shall be modified as required to most closely meet the described requirements.

2.02 WATER PIPING (BURIED)

A. Polyethylene Tubing: Shall be copper tube size rated for 200 psi. Tubing shall be SDR 9 and shall meet requirements of ASTM D-2737 and national Sanitation Foundations requirements for potable water. Fittings shall be compression type with stiffener inserts.

B. Acceptable Products:
1. Vanguard Plastics.
2. Cresline - Equal.

2.03 FIRE EXTINGUISHING

A. Ductile Iron Pipe: AWWA C151.
1. Fittings: Ductile or grey iron, standard thickness.
2. Joints: AWWA C111, rubber gasket with 3/4" diameter rods.

B. C-900 PVC Certified by NSF:
1. Fittings: Ductile or grey iron, standard thickness.
2. Joints: AWWA C111, rubber gasket with rods.

2.04 WATER PIPING, ABOVE GRADE

A. Copper Tubing: ASTM B88, Type L, hard drawn.
1. Fittings: ASME B16.18, cast bronze, or ASME B16.22, wrought copper and bronze.
2. Joints: ASTM B32-92, solder, lead-free and antimony-free.

3. Acceptable Products: Solder
   a. Taracorp Tarament Sterling.
   b. Oatey Silver.
4. At Contractor's option fittings shall be wrought copper press connected type with EPDM "O"-Ring type gaskets. Fittings shall have indicators that verify connections have been made.
5. Acceptable Products:
   a. Viega ProPress.

2.05 FLANGES, UNIONS, AND COUPLINGS

A. Pipe Size 2″ and Under:
   1. Ferrous pipe: 150 psig malleable iron threaded unions.
   2. Copper tube and pipe: 150 psig bronze unions with soldered joints.

B. Dielectric Unions:
   1. Square cut NPT female inlet.
   2. Brass socket for solder connection outlet.
   3. Ground join connection with dielectric gasket good for minimum of 210 degrees.

2.06 VALVES

A. Ball Valves up to and including 3″: Bronze 600# wog, 150# swp two piece body, stainless steel or chrome plated full port bronze ball, teflon seats and stuffing box ring, lever handle, solder or threaded ends.

B. Swing Check up to and including 2″: Bronze body rated for 150 # wog with wye configuration, bronze disc, integral seat and threaded or solder ends.

C. Acceptable Products:

		Ball	Swing Check	Vertical Check
1.	Apollo	Model 77 Series	---	61-500 Series
2.	Watts	Model 6800 Series	WCV	---
3.	Milwaukee	Model BA 400 Series	515	---
4.	Nibco	Model T-585 Series	T-453	T-480

2.06 WATER SERVICE DEVICES

A. General Requirements
   1. All devices shall be rated for use with potable water at pressures of 150 psig.
   2. All devices shall meet standards of the National Sanitation Foundation (NSF) and the American Water Works Association (AWWA).

B. Tapping Sleeve:
   1. Shall have mechanical joint run connection and flanged outlet connection. Configuration shall be split longitudinally. It shall be constructed of epoxy coated ductile iron.
   2. Shall have gasketing for connection to ductile iron or SPR 26 plastic as verified in the field.
   3. Shall be rated for 200 psi pressure.

C. Corporation stops shall have bronze bodies with tapered bronze male inlet 1/4 turn tapered plug valve and compression outlet. Operator shall be a rectangular head.

D. Tapping saddle shall be sized for main pipe and consist of two brass bands hinged to a cast bronze saddle with stainless steel or brass adjustment screws. Casting shall be tapped for corporation stop.

E. Corporation stop and saddle shall be capable of accepting wet tap drill rig.

F. Curb valve shall have bronze body with tapered 1/4 turn plug or ball configuration and compression ends for CTS tubing. Operator shall be rectangular or square.

G. Valve box for 2″ and smaller services shall be three piece type which utilizes 1-1/4″ pipe to accommodate bury depth. Extension pipe shall be schedule 40 galvanized steel. Top shall have holes for spanner wrench operation; it shall be cast iron with bronze threaded insert. Lower element shall be bell shaped with cut out to accommodate curb stop. Furnish with 6′-0″ combination fee handle to fit valve operator and spanner holes.

H. Gate Valve
1. Construction shall be cast iron with epoxy coated interior and exterior. Seals shall be Bunna-N-Rubber.
2. Configuration shall be resilient wedge gate type with none rising stem.
3. Connections shall be flanged by mechanical joint type.
4. Operator shall be 1-1/4″ square nut above a cast iron support plate. Provide with 1 “Tee” handle wrench of an 8′-0″ length.

I. Valve Box
1. Shall be of cast iron construction.
2. Configuration shall be adjustable height type.
3. Lid shall be bolt on type cast lid. Lid shall be “water” cast in its upper surface.

H. Indicator Posts:
1. Shall match valves noted above.
2. Shall be vertical configuration.
3. Shall be telescoping and adjustable to match the depth requirements.
4. Shall have operating rod with guides.
5. Shall have demountable ductile iron operating handle/wrench.
6. Shall have polycarbonate window and aluminum targets which show “open” and “shut” positions.
7. Shall have ductile iron window marked water.

J. Acceptable Products:

		Gate Valve	Indicator Posts	Tap Sleeve
1.	NIBCO	FM609-RW	NIP-IAJ	---
2.	Mueller	A2360	A-20806	H615
3.	Clow	C509	---	---
4.	Kennedy	C509	2945A	Fig 957/960

		Curb Box	Corp. Stop	Curb Valve	Tap Saddle
1.	Mueller	H10316 Series	Mark II Oriseal	B25155N	H13000 Series

2.07 STRAINERS

A. Shall be bronze construction acceptable by NSF. Strainer screen shall be No. 20 stainless steel mesh. Pressure rating shall be 150 psig.

B. Sizes 2″ and smaller shall have female NPT ends.

C. Acceptable Products:
1. Hammond 3010
2. Conbraco 85-5-5-5 Series
3. Watts Series 777

PART 3 - EXECUTION

3.01 EXAMINATION

A. Examine areas and conditions under which plumbing piping is to be installed.

B. Verify excavations are free of debris or stones.

C. Verify that excavations are to required grade, dry, and not over-excavated.

D. Verify existing piping at new connection points is in sound condition.

E. Verify placement of fixtures and equipment to determine locations of rough-in connections.

F. Correct any unsatisfactory conditions before beginning installing piping products of this section. Commencement of installation indicated acceptance of conditions.

3.02 PREPARATION

A. Ream pipe and tube ends. Remove burrs.

B. Remove scale and dirt, on inside and outside, before assembly.

C. Prepare piping connections to equipment with flanges or unions.

D. Valves:
1. Remove shipping materials.
2. Examine valve (interior and exterior) to verify that valve is clean and corrosion free.
3. Verify that valves operable through full open and close positions.
4. Inspect mating flange surfaces. Verify bolt sizes, materials, and lengths. Verify that gaskets are free of defects, properly sized, and composed of correct material.

3.03 DEMOLITION

A. Removal for ever.
1. Disconnect water pipe which feeds fixtures within the building from the current water service.

2. Remove such water pipe as necessary in ceiling spaces and within equipment rooms. Remove hangers and other appurtenances.
3. Disconnected pipe left in walls shall be removed with the wall where the wall is designated for demolition.
4. Disconnected pipe left within walls slated for reuse shall be abandoned in place.
5. Water pipe which feeds irrigation needs shall be left in place until new water services are complete and backflow preventer and water meters are re-installed at new locations.
6. The existing underground water service shall be dug up and capped at the main as to not leave a “dead-end” connection.

3.04 EXCAVATION, BEDDING AND BACKFILL

A. Excavate existing fill and material to locate existing piping and to install new.

B. Install new underfloor piping on new compacted granular cradle bedding. Install at least 3 inches of bedding above top of pipe. Use clean p-gravel or sand as bedding.

C. Remaining backfill shall be what was removed from excavation less debris or shall be bedding material. Flowable fill shall be installed where roadways are crossed if excavations are open.

D. On concrete cuts over 24" wide, perpendicularly drill edges of cut on 24 inches centers and install No. 4 rebar at mid-point of slab depth.

3.05 INSTALLATION

A. Install in accordance with manufacturer's instructions.

B. Provide non-conducting dielectric connections wherever jointing dissimilar metals.

C. Route piping in orderly manner and maintain gradient.

D. Install piping to conserve building space and not interfere with use of space. Install pipe parallel or at right angles to building walls. Diagonal runs shall be as shown on drawings.

E. Group piping whenever practical at common elevations.

F. Install piping to allow for expansion and contraction without stressing pipe, joints, or connected equipment. Install fittings at changes in direction. Install swing joints at branch connections to mains.

G. Conceal pipe where new chases and walls and firring are provided. Pipe on existing wall is exposed, unless otherwise noted on Drawings.

H. Connecting components of unequal size: Install standard reducers or increasers, correctly sized for application indicated.

I. Clearances:
1. Provide adequate space around piping to allow proper application of insulation.
2. Finished piping insulation minimum clearance: 1”, all around.

J. Support and anchor pipe as specified in Section 220529.

K. Joints:
1. Copper Pipe:
a. Press Fittings:
1) Shall be made in accord with fitting manufacturer's instruction using tools recommended by that manufacturer.
b. Sweat Fittings:
1) Solder shall be full depth of fitting socket.
2) Joints shall be "wiped" and form a neat fillet.

L. Domestic Water Piping System:
1. Install on interior side of building insulation. Do not install in ventilated attic.
2. Pitch: 1/32″-per-foot (1/4 percent) or greater to drain point. Do not trap. Provide valves at drain point.
3. General-purpose valves:
a. Install valves with stems horizontal or above horizontal. Do not install inverted.
b. Position valves to allow easy access. Provide additional support where required.
c. Provide valves as shut offs to all equipment and as indicated.
d. Allow clearance for insulation at handles.
4. Connections:
e. Piping runouts to fixtures: Install runouts to fixtures. Size piping, as required.
f. Mechanical equipment: Provide connections to equipment as required.

M. Underground Water Service Pipe 4″ and larger:
1. Do work in accord to Illinois American Water Co. standards.
2. Use PVC C-900 or ductile iron pipe specified. All fittings shall be ductile iron.
3. Provide concrete thrust block at all changes in direction.
4. Make connection to existing main with split “tee” connection. Set valve and make live tap.
5. Set valve box on 6″ concrete footing under pipe. Extend to level grade. Provide minimum of 24″ x 24″ x 6″ deep concrete around upper portion of valve box.
6. Patch remaining surface to match existing construction in thickness and type.
7. Terminate service pipe on inside of wall with mechanical flange and opposing pipe flange. Service pipe shall be sleeved through the floor. Provide restraining rods anchored to concrete thrust block through the sleeve. Seal annual area of the sleeve with “Dur-Rock”.
8. Provide continuous mylar ribbon specified in Section 220553 above piping at 16″ below grade.

N. Underground Water Service Pipes 2″ and Smaller:
1. Do work in accord to Illinois American Standards.
2. Use polyethylene service pipe specified.
3. Make connection at existing mains with tapping tee and a corporation stop specified. Make live tap through corporation stop.
4. Extend service to stop valve location where shown on drawing. Set stop valve on accessory valve box foot. Field adjust valve box height to match grade.

5. Extend polyethylene service into the building through a PVC sleeve mortared into a core drilled opening.
6. Provide a compression connection and NPT brass elbow adaptor at the wall. Install a full port ball valve immediately inside the building.
7. Fill annular area between the sleeve and the service pipe with expandable polyurethane foam the full depth of the sleeve.

3.06 APPLICATION

A. Install unions downstream of valves and at equipment or apparatus connections. Use in accessible locations only.

B. Install valves for shut-off to isolate equipment and in vertical risers. See drawings for other locations.

C. Application Chart:

Use Description	Pipe Type	Fitting Type
1. Fire Service Risers	Ductile Iron or C-900	Mechanical Joint Ductline Iron
2. Underground Domestic Water Service	psi Polyethylene	Compression Connectors
3. Domestic Water Pipe (Above ground)	Copper	Sweat Solder

3.07 ERECTION TOLERANCES

A. Slope water piping and arrange to drain at low points.

3.08 DISINFECTION OF DOMESTIC WATER PIPING SYSTEM.

A. Do in accord with the Illinois Plumbing Code.

END OF SECTION 221100

SECTION 221119 – DOMESTIC WATER PIPING SPECIALTIES

PART 1 - GENERAL

1.01 WORK INCLUDES

A. Base Bid:
   1. Contractor Provide:
      a. Hydrants.
      b. Backflow preventers, laundry specialties and water hammer arrestors.
      c. Thermostatic mixing valves.
      d. Hot water maintenance.
      e. Water treatment devices.
      f. Commission of backflow preventers.

1.02 DESCRIPTION

A. Definitions:
   1. Plumbing Contractor = Plumbing Subcontractor for this work.

1.03 RELATED WORK

E. Specified Elsewhere:
   1. 221100 – Water Piping.
   2. 224000 – Plumbing Fixtures.

1.04 REFERENCES

A. ANSI/ASSE 1013 - Backflow Preventers, Reduced Pressure Principle.

B. ANSI/ASSE 1019 - Wall Hydrants, Frost Proof Automatic Draining Anti-Backflow Types.

C. ANSI A112.26.1 - Water Hammer Arrestors.

D. AWWA C506 - Backflow Prevention Devices - Reduced Pressure Principle and Double Check Valve Types.

E. PDI WH-201 Water Hammer Arresters.

1.05 SUBMITTALS

A. Submit under provisions of Section 013300.

B. Product Data: Provide component sizes, rough-in requirements, service sizes, and finishes.

C. Manufacturer's Installation Instructions: Indicate assembly and support requirements.

D. Test Certificate for back flow preventers.

E. Submit line item price for backflow preventer and backflow preventer commissioning on Schedule of Values. Identify supplier vendor.

1.06 PROJECT RECORD DOCUMENTS

A. Submit under provisions of Section 017839.

B. Record actual locations of equipment, backflow preventers, and water hammer arrestors.

1.07 OPERATION AND MAINTENANCE DATA

A. Submit under provisions of Section 017823.

B. Maintenance Data: Include installation instructions, spare parts lists, exploded assembly views.

1.08 DELIVERY, STORAGE, AND HANDLING

A. Deliver, store, protect and handle products to site under provisions of Section 016000.

B. Accept specialties on site in original factory packaging. Inspect for damage.

1.09 EXTRA MATERIALS

A. Furnish under provisions of Section 017700.

B. Provide two loose keys for each hydrant.

PART 2 - PRODUCTS

2.01 MANUFACTURER & PERFORMANCE

A. Unless otherwise specified the manufacturer’s number specified or scheduled is listed merely as an aid to prospective bidders. In most cases it is an incomplete number and relies upon the written description to fully define the item. Where model numbers define a single manufactured item which does not include the items include in the written description, the model number shall be modified as required to most closely meet the described requirements.

2.02 LAUNDRY SPECIALTIES

A. Recessed Laundry:
1. Box shall be made of painted steel or pvc.
2. Shall have connection for 1-1/2″ pvc stand pipe.
3. Shall have dual ball/cylinder valves operated with a single lever or individually with 3/4" hose connections. Inlet connections shall be combination male NPT or copper sweat.
4. Provide piston type water hammer arrestors.

B. Acceptable Products:

	Arrestor Box
1. Guy Gray	WB 200 HA
2. Oatey	38747

2.03 HYDRANTS

A. Acceptable Products:

	Exposed
1. Woodford	65 Series
2. Zurn	Z1300
3. Prier	C534 Series

4. Mifab HY1000 Series

B. Exposed Wall Hydrant: ANSI/ASSE 1019 and 1052; non-freeze, self-draining type with rough chrome modular horizontal plate, hose thread spout, lockshield and removable key, and integral vacuum breaker. Field verify wall thickness.

2.04 BACKFLOW PREVENTERS

A. Reduced Pressure Detector Check Valve Assemblies: UL listed, FM Approved ASSE 1013; Epoxy cast iron or stainless steel body with corrosion resistant internal parts and stainless steel springs; two independently operating check valves with intermediate atmospheric vent and relief valve, water meter, bronze body or stainless steel body double check unit. Provide with air gap fitting. Valves shall be rising stem gate configuration.

B. Manufacturers:

		Reduced Pressure Detector Ck
1.	Febco	826D
2.	Watts	909RPDA
3.	Wilkins	375DA
4.	Conbraco	40-700

2.05 WATER HAMMER ARRESTORS

A. Manufacturers:

1.	Josam	75000 Series.
2.	Wade	Model Shokstop Series.
3.	Zurn	Model Shocktrol Series.
4.	Smith	Hydrotrol.
5.	Sioux Chief Mfg Co.	Hydravestor.
6.	Precision Plumbing Products	SC Series.

B. ANSI A112.26.1; sized in accordance with PDI WH-201, precharged suitable for operation in temperature range 40 to 120 degrees F and maximum 50 psig working pressure, bellows or piston type.

2.06 THERMOSTATIC MIXING VALVES

A. Thermostatic mixing valves for use with lavatories shall be lead-free construction of, or combination of, brass, bronze, stainless steel and synthetic material. Valve shall have minimum flow capacity range of .50 gpm to 6.00 gpm. Temperature shall be adjustable up through 110 degrees F. Device shall be approved per ASSE 1070. Single lavatory devices shall have hot and cold inlets and tempered water and cold water outlets. Matallic exterior portions shall be chrome or nickel plated.

B. Acceptable Products:

	Single Lavatory Type
1. Leonard	Model 105
2. Bradley	S59 Series
3. Zurn Wilkens	ZW3870XLT-4P
4. Watts	USG-B

2.08 DOMESTIC HOT WATER TEMPERATURE MAINTENANCE

A. Hot water circulating pumps shall:

1. Be of bronze and stainless steel construction and rated for use with potable water at 125 psig and 220 degrees F.
2. Have sweat, union or flanged connections.
3. Motor shall be replaceable cartridge type or shall be oil lubricated. Motor position shall be adjustable.
4. Be 120v and a maximum of 1/25 hp.
5. Be capable of moving four gpm against 12’ of head.

B. Acceptable Products:
1. Bell and Gossett NBF-9U/LW.
2. Taco 008BC.
3. Grundfos UP15-42B7.

2.09 WATER TREATMENT DEVICES

A. Water Conditions:
1. Shall use venturi action to inject treatment chemicals into domestic water system.
2. Configuration shall be replaceable cartridge type with inlet and outlet connections at top. Reservoirs shall be translucent. Canister shall be rated at 125 psig at 100 degrees F.
3. Treatment chemicals shall be in cartridge form. These shall meet NSF-60 requirements for drinking water treatment chemicals. Chemicals shall prevent formation of calcium or magnesium carbonate.
4. Device shall be capable of treating up to 6000 gallons of water at one part per million.
5. Furnish with two chemical cartridges for each filter installed.
6. Intermediate filter shall be activated carbon type. It shall remove odors and tastes.
7. Acceptable Products:
   a. Scalesafe FA-SS-CB-TW (20).
   b. Wallts One Flow.

B. Sediment Water Filters:
1. Shall be replaceable cartridge type.
2. Shall be NSF approved.
3. Shall have polypropylene body with removable cartridge container. Inlet shall have built-in strainer.
4. Unit shall operate at flow rates of .5 gpm minimum and 2 gpm maximum.
5. Body shall be no more than 5" diameter x 8" tall.
6. Furnish with two spare cartridges for each filter installed.
7. Shall have activated charcoal filter.

C. Acceptable Manufacturers:
1. Aquapure.
2. Everpure.
3. Scalesafe.
4. Brass Master PS-Filtration.

2.10 SPECIALIZED VALVES

A. Balance Valve: Calibrated, plug type with precision machined orifice, readout valves equipped with integral check valves and gasketed caps, calibrated nameplate and indicating pointer. Provide with drain kit. Provide with solder, NPT or flanged connections as required to mate pipe.

B. Relief Valve: Shall have bronze body with poppet style adjustable relief mechanism. Connections shall be 3/4" NPT. Unit shall have ASME rating.

C. Acceptable Products:

	Balance Valve	Relief Valve

1.	Wilkens	---	P174A
2.	Watts	CSM-61	174A
3.	Conbraco	---	106-200 Series

PART 3 - EXECUTION

3.01 INSTALLATION

A. Install in accordance with manufacturer's instructions.

B. Install water hammer arrestors complete with accessible isolation upstream of flush valves and quick closing electric valves, and laundry connections, and where shown on Drawings.

C. Thermostatic Mixing Valves:
1. Shall be located tight under lavatory tops above stops.
2. Shall be adjusted to maintain 105 to 110 degrees F at lavatory faucets.
3. Shall be connected between stops and faucets with stainless steel flexible connections.

D. Domestic hot water circulating pump shall be installed as shown on drawings. It shall be installed in vertical pipe. It shall draw water from the end of the hot water system and return it to the cold side of the water heater through a check valve.

E. Water Treatment Devices:
1. Install a water filter upstream of each electric water cooler.
2. Install a water filter upstream of the cold water connections to each counter sink faucet that has a cabinet.
3. Conceal filters in cabinets. Secure to wall.
4. Mount filters and conditioners so that cartridges can be changed.
5. Mount pre-filters upstream of conditioner/odor filters.
6. Secure filter and conditioner mounting brackets to blocking, struts, or standoffs so that pipe joints do not bear the torque of loosening filter bowls from filter caps.

3.03 TESTING

A. Commission backflow preventers.

END OF SECTION 221119

SECTION 221300 - SANITARY PIPING

PART 1 - GENERAL

1.01 WORK INCLUDES

A. Base Bid:
   1. Contractor Provide:
      a. Replacement of building sanitary service connection.
      b. New sanitary sewer and vent systems interior of building.
      c. Exploration work to locate existing under floor and underground sanitary piping including depth and horizontal location.
      d. All cutting and patching of existing concrete slabs and asphalt roadways and excavation and backfill required to access and utilize existing piping.
      e. All utility connection fees required for connection and sewer service.

1.02 DESCRIPTION

A. Definitions
   1. Pump Discharge Pipe – is that pipe downstream of a sewage ejector.
   2. Sanitary piping includes waste and vent piping in building and piping service piping outside of building.
   3. Plumbing Contractor = Plumbing Subcontractor or Plumbing Trade.

1.03 RELATED WORK

A. Specified Elsewhere:
   1. 220529 – Supports and Anchors for Plumbing.
   2. 220553 – Identification for Plumbing Piping and Equipment.
   3. 220700 – Plumbing Insulation.
   4. 221300 – Sanitary Waste Piping Specialties.
   5. 221329 – Sanitary Sewerage Pumps.
   6. 224000 – Plumbing Fixtures.

1.04 REFERENCES

A. ANSI B31.9 - Building Service Piping.

B. ASTM D1785 - Poly Vinyl Chloride (PVC) Plastic Pipe, Schedules 40, 80, and 120.

C. ASTM D2466 - Poly Vinyl Chloride (PVC) Plastic Pipe Fittings, Schedule 40.

D. ASTM D2564 - Solvent Cements for Poly Vinyl Chloride (PVC) Plastic Pipe and Fittings.

E. ASTM D2729 - Poly Vinyl Chloride (PVC) Sewer Pipe and Fittings.

F. ASTM D2855 - Making Solvent-Cemented Joints with Poly Vinyl Chloride (PVC) Pipe and Fittings.

G. ASTM F477 - Elastomeric Seals (Gaskets) for Joining Plastic Pipe.

1.05 SUBMITTALS

A. Submit under provisions Section 013300.

B. Product Data: Provide data on no hub connectors and piping accessories. Provide manufacturers catalog information.

1.06 PROJECT RECORD DOCUMENTS

A. Submit under provisions of Section 017839.

B. Record actual locations of valves and cleanouts. Record lateral and vertical locations of underfloor and underground pipe. Locate in relation to walls and surfaces which extend beyond concealing surfaces.

C. Obtain A/E review of record documents before or at each pay progress meeting.

1.07 QUALITY ASSURANCE

B. Valves: Manufacturer's name and pressure rating marked on valve body.

1.08 REGULATORY REQUIREMENTS

A. Perform Work in accordance with State of Illinois Plumbing Code.

B. Sanitary sewer service work shall be done in accord to the regulations and specifications set forth by the Greater Peoria Sanitary District.

1.09 DELIVERY, STORAGE, AND HANDLING

A. Deliver, store, protect and handle products to site under provisions of Section 016000.

B. Provide temporary end caps and closures on piping and fittings. Maintain in place until installation.

C. Protect piping systems from entry of foreign materials by temporary covers, completing sections of the work, and isolating parts of completed system.

1.10 ENVIRONMENTAL REQUIREMENTS

D. Do not install underground piping when bedding are wet or frozen.

B. Do not utilize solvent weld products when dry wall sanding is underway.

PART 2 - PRODUCTS

2.01 MANUFACTURER & PERFORMANCE

A. Unless otherwise specified the manufacturer’s number specified or scheduled is listed merely as an aid to prospective bidders. In most cases it is an incomplete number and relies upon the written description to fully define the item. Where model numbers define a single manufactured item which does not include the items include in the written description, the model number shall be modified as required to most closely meet the described requirements.

2.02 PLASTIC PIPING FOR WASTE AND VENT

A. PVC Pressure Pipe ASTM D1785.
   1. Fittings: ASTM D2466.
   2. Connections solvent weld ASTM D5264.

B. Non-Pressure PVC Pipe: Solid (not foam core) Schedule 40 DWV ASTM D 1785; ASTM D-2665.
   a. Fittings: PVC.
   b. Joints: ASTM D2855, solvent weld with ASTM D2564 solvent cement.

C. PVC Pipe for Sanitary Service: (See specifications of Greater Peoria Sanitary District.)
   a. Pipe shall be SDR-26 PVC complying with ASTM D-3034.
   b. Connections shall be bell and spigot push-on type with gaskets complying with ADTM D-3213 and ASTM F477.
   c. Fittings shall be mechanical joint type of ductile iron construction.

D. Connector Fittings:
   1. Shall be “no-hub” type.
   2. Shall be one piece neoprene gaskets with full stainless steel housings and stainless steel band clamps. Assembly shall comply with ASTM and CISPI 310.

E. Acceptable Products:
   1. Charlotte Figure NH-1.
   2. Clamp-All Hi-Torq 80/125.
   3. Tyler No hub coupling assembly.

F. Plastic ball valves 1-1/2" and 2" shall be PVC with union nuts on both ends and socket solvent weld connections. Valve shall have full port design, Teflon seats, EPDM o-rings seals, and lever handle with stem extension for specified insulation.

G. Plastic ball valves 3" and larger shall have metal locking lever handle, flanged connections, Teflon seals, stem extension for 1" thick insulation, EPDM o-ring seals.

H. Acceptable Products:
   1. NIBCO Chemtrol Tru-Bloc.

PART 3 - EXECUTION

3.01 EXAMINATION

A. Examine areas and conditions under which waste and vent piping is to be installed.

B. Verify that excavations are to required grade, dry, and not over-excavated, and are free of debris or stones.

C. Verify existing piping at new connection points is in sound condition.

D. Verify placement of fixtures and equipment to determine locations of rough-in connections.

E. Correct any unsatisfactory conditions before beginning installing piping products of this section. Commencement of installation indicated acceptance of conditions.

3.02 PREPARATION

A. Ream pipe and tube ends. Remove burrs. Bevel PVC pipe.

B. Remove scale and dirt, on inside and outside, before assembly.

C. Prepare piping connections to equipment with flanges or unions.

3.03 DEMOLITION

A. Removal for reuse.
   1. Disconnect existing piping where new piping is shown for reconnection carefully by dis-assembling joints or by squarely cutting.
   2. Cap open end of pipe temporarily if to be reused or permanently if not shown for reuse.
   3. Abandon pipe left under floors which is not otherwise interfering with new pipe.
   4. Disconnect and cap main waste pipe under floor where branch pipe is removed from service. Use cast iron “no hub” cap with “no hub” type coupling.

B. Floor and Slab Cutting:
   1. Existing concrete and asphalt surfaces shall be saw cut at least 2 inches through before material is broken up and removed.
   2. Minimize extent of removal work; however, provide sufficient removal to access piping.

3.04 EXCAVATION, BEDDING AND BACKFILL

A. Excavate existing fill and material to locate existing piping and to install new.

B. Install new underfloor piping on new compacted granular cradle bedding. Install at least 3 inches of bedding above top of pipe. Use clean p-gravel or sand as bedding.

C. Remaining backfill shall be what was removed from excavation less debris or shall be bedding material.

3.05 INSTALLATION

A. Install in accordance with manufacturer's instructions.

B. Route piping in orderly manner and maintain gradient.

C. Install piping to conserve building space and not interfere with use of space. Install pipe parallel or at right angles to building walls. Diagonal runs shall be as shown on drawings.

D. Group piping whenever practical at common elevations.

E. Install piping to allow for expansion and contraction without stressing pipe, joints, or connected equipment. Install fittings at changes in direction.

F. Conceal pipe where new chases and walls and firring are provided. Pipe on existing wall is exposed.

G. Connecting components of unequal size: Install standard reducers or increasers, correctly sized for application indicated. Do not use bushings.
   1. Do not reduce size of drainage piping in the direction of flow.

H. Clearances:
   1. Provide adequate space around piping to allow proper application of insulation.
   2. Finished piping insulation minimum clearance: 1", all around.

I. Support and anchor pipe as specified in Section 220529.

J. Joints:
   1. PVC pipe:
      a. Solvent-welded joints:
   2. Conform to requirements of ASTM D 2855.

K. Soil, Waste, and Vent System:
   1. Pitch: Pitch pipe in accord to Plumbing Code of the State of Illinois.
   2. Underground Building Drains:
      a. Locate existing connection of sewer pipe outside of building to existing pipe.
      b. Start drain installation at system’s lowest point. Maintain alignment and grade indicated and provide uninterrupted continuity of invert.
   3. Sanitary Sewer Service:
      a. Provide a continuous mylar warning ribbon as specified in Section 220553 16" below grade.
      b. Install pipe as noted above.

3.06 APPLICATION

A. Application Chart:

Use Description	Pipe Type	Fitting Type
1. Sanitary Service in Building (Above and Below Ground)	Schedule 40 PVC	Solvent Weld PVC
2. Sanitary Outside of Building (Below Ground)	SDR 26 PVC	Push on Gaskets
3. Vent Pipe (Above and below ground)	Schedule 40 PVC	Solvent Weld

3.07 ERECTION TOLERANCES

A. Establish invert elevations, slopes for drainage to 1/8” per foot for waste piping 4" and larger. Smaller waste piping shall be 1/4" per foot.

END OF SECTION 221300

SECTION 221319 – SANITARY WASTE PIPING SPECIALTIES

PART 1 - GENERAL

1.01 WORK INCLUDES

A. Base Bid:
   1. Contractor Provide:
      a. Floor drains, floor sinks and trench drains.
      b. Cleanouts.

1.02 DESCRIPTION

A. Definitions:
   1. Plumbing Contractor = Plumbing Subcontractor for this work.
   2. Finished areas are those with floors other than unstained concrete and include areas like toilet rooms.
   3. Unfinished areas are those with floors that are unstained and sealed concrete which do not have any other surface finish like tile or sheet vinyl. Unfinished spaces include requirement and water heater and water heater and water softener rooms.

1.03 RELATED WORK

A. Specified Elsewhere:
   1. 220529 – Supports and Anchors for Plumbing.
   2. 220700 – Plumbing Insulation.
   3. 221300 – Sanitary Piping.
   4. 224000 – Plumbing Fixtures.

1.04 REFERENCES

A. ANSI A112.21.1 - Floor Drains.

1.05 SUBMITTALS

A. Submit under provisions of Section 013300.

B. Product Data: Provide component sizes, rough-in requirements, service sizes, and finishes.

C. Manufacturer's Installation Instructions: Indicate assembly and support requirements.

D. Manufacturer's Certificate: Certify that grease oil interceptors meet or exceed specified requirements.

1.06 PROJECT RECORD DOCUMENTS

A. Submit under provisions of Section 017839 (the General Conditions).

B. Record actual locations of equipment, cleanouts, and floor drains.

1.07 OPERATION AND MAINTENANCE DATA

A. Submit under provisions of Section 017823 (1.05) (the General Conditions).

B. Provide manufacturer’s instruction for cleaning and the limitations for how devices are cleaned.

C. Maintenance Data: Include installation instructions, spare parts lists, exploded assembly views.

1.08 DELIVERY, STORAGE, AND HANDLING

A. Deliver, store, protect and handle products to site under provisions of Section 016000.

B. Accept specialties on site in original factory packaging. Inspect for damage.

1.09 COORDINATION

A. With other trades:
1. Set heights of drains and cleanouts before concrete work is done.
2. Coordinate with finish floor trades.

B. With Architect/Engineer/Owner.
1. Before masking drain tope to protect against concrete pours, obtain photographs of installed drains which clearly show the manufacturer’s mark of the drain installed. Forward photographs to Architect/Engineer through General Contractor. Do this if Architect/Engineer does not inspect.

PART 2 - PRODUCTS

2.01 MANUFACTURER & PERFORMANCE

A. Unless otherwise specified the manufacturer’s number specified or scheduled is listed merely as an aid to prospective bidders. In most cases it is an incomplete number and relies upon the written description to fully define the item. Where model numbers define a single manufactured item which does not include the items include in the written description, the model number shall be modified as required to most closely meet the described requirements.

2.02 FLOOR DRAINS, SINKS AND TRENCH DRAINS

A. Floor sink shall: (Use of Fire Sprinkler for discharge of backflow preventer.)
1. Have nominally 12" square x 6" deep cast iron body.
2. Have 1/2 top grate.
3. Have trap at least 4” deep.
4. Have removable secondary strainer.
5. Have neoprene gasketed inside caulk or “no hub” outlet.

B. Round floor drains in finished spaces shall:
1. Be constructed of cast iron with 6” diameter strainer and inside caulk “no-hub” or gasketed outlet.
2. Have adjustable round top with vandal resistant “high heel” proof strainer constructed of polished nickel bronze.
3. Shall have a tapped trap primer connection.
4. Provide membrane flange for drains in floors which are not “slab on grade”.

C. Floor drains (for equipment rooms shall have cast iron bodies with gasketed or "no-hub" outlet. Top shall be adjustable with a 7” to 9" loose cast iron or bronze grate. Provide with sediment bucket. Drains in floors which are not “slab on grade” shall have membrane flange.

D. Trench drains for finished spaces:

1. Shall have feel proof light duty Type 304 stainless steel grate.
2. Shall be a maximum of 4″ wide channel x the length noted on the Drawings. Optional configuration shall use a maximum 5/16″ wide slot attached to a square sump no greater than 9.6″ x 9.6″.
3. Shall be fabricated of Type 304 stainless steel with a V-shaped or slopped channel and a 2″ “no hub” outlet.
4. Shall be vertically adjustable to accommodate 1/4″ to 3/8″ thick finished tile thickness. Tile edge shall be incorporated into the drain.
5. Shall include adjustable anchoring/rough-in supports.

E. Acceptable Products:

		Round Finished	Trench Drain Finished Space
1.	Josam	30,000 Series	47100 Series
2.	Smith	2005 Series	9660 Series
3.	Wade	W-1100 Series	---
4.	Zurn	Z-415 Series	ZS880 Series

		Round (Equipment)	Floor Sink
1.	Josam	32100	31120 series
2.	Smith	2110	---
3.	Wade	W1350	W-2370
4.	Zurn	Z550 or Z415-9I	Z-566

2.03 CLEANOUTS

A. Floor Cleanouts (FCOS) Shall:
1. Be of cast iron construction.
2. Have an adjustable top and a bronze or pvc tapered plug.
3. Have gasketed or no-hub outlet.
4. Have heavy duty scoriated round tractor cover where shown in finished spaces.

B. Wall Cleanouts Shall: (Use wherever cleanout is covered by a wall.)
1. Shall have brass plug tapped for screw.
2. Shall have chrome plated brass or brushed stainless steel cover with stainless steel screw.

C. Yard Cleanouts:
1. Shall be of heavy-duty cast iron construction sized to fit over 4" PVC riser with screwed adaptor coupling and plug.
2. Shall have flanges cast into side walls or adjustable flange mated to cast iron threads.
3. Shall have extra heavy-duty scoriated ductile iron cover secured with stainless steel screws.
4. ANSI load class shall be rated for over 10,000 lbs.

D. Acceptable Products:

		FCO	WCO	YCO
1.	Josam	56070 Series	Equivalent	---
2.	Smith	4020 Series	Equivalent	---
3.	Wade	W-6000 Series	W-8470	8300 MF
4.	Zurn	Z-1400 Series	Z-1468	Z-1474

2.04 SAMPLE ACCESS STATION

A. Shall meet requirements of The Greater Peoria Sanitary District.

B. Base shall have welded wire reinforcing, lifting hooks, top receptor for 12″ diameter concrete sewer pipe and cast-in connections for 6″ SDR 26 PVC sewer pipe.

C. Risers shall be 12″ Class B reinforced concrete Bell & Spigot sewer pipe. Joints shall be sealed with elastometric seal or compound.

D. Casting shall be equal to Neenah R-1976 manhole and lid.
   1. Lid shall be 11″ diameter with one pickhole and two locking stainless steel bolts.
   2. Frame shall have 10″ free opening, 8″ height and 1-1/4″ drop.

PART 3 - EXECUTION

3.01 PREPARATION

A. Coordinate forming of floor construction to receive drains to required invert elevations.
   1. Drains in toilet rooms and work rooms shall be level with finished floor.
   2. Protect drain strainer from construction. Prove to Owner and Architect/Engineer drain submitted is drain installed prior to concrete pour.

3.02 INSTALLATION

A. Install in accordance with manufacturer's instructions.

B. Extend floor cleanouts to finished floor surface. Extend wall cleanouts to break inner surface of drywall or backer board. Lubricate threaded cleanout plugs with mixture of graphite and linseed oil. Ensure clearance at cleanout for rodding of drainage system. Ensure plug can be removed from the opening.

C. Drains:
   1. Provide drains in new above grade floors with a 24″ x 24″ flashing.
   2. Provide floor drains with deep seal traps unless specified otherwise.
   3. Open existing floor in a size to accommodate the entire drain body. Chamfer upper surface to allow concealment of 4" of flashing material. Clamp flashing to drain and grout in with epoxy concrete. Support drain with strut under cast iron trap or within concrete filled box as detailed.
   4. Prime drain traps in with vegetable oil.
   5. Connect trap primers with 3/4" annealed Type K copper. Connect to trap primer fixture, or valve.

3.03 STRUCTURE AND TANK INSTALLATION

A. Saw-cut upper pavement and excavate to find existing sanitary connection. Hand trim excavation to accommodate placement of structure.

B. Place bedding material level in one continuous layer not exceeding 8 inches compacted depth, compact to 95 percent.

C. Backfill around sides of tank, tamped in place.

D. Maintain optimum moisture content of bedding material to attain required compaction density.

END OF SECTION 221319

SECTION 221329 - SANITARY SEWERAGE PUMPS

PART 1 - GENERAL

1.01 WORK INCLUDES

A. Base Bid:
   1. Contractor Provide:
      a. Ejector pump and basin.
      b. Tank vault indicator pit basin and lid..
      d. Commissioning of ejector pump, controls and alarm.
      d. The first years recommended service inspection as recommended by the manufacturer.

1.02 RELATED WORK

A. Specified Elsewhere:
   1. 221300 - Sanitary Piping.
   2. 221319 - Plumbing Waste Piping Specialties.
   3. 224000 - Plumbing Fixtures.

1.03 REFERENCES

A. ANSI/ASHRAE 90A - Energy Conservation in New Building Design.

1.04 SUBMITTALS

A. Submit under provisions of Section 013300.

B. Product Data:
   1. Include dimension drawings of pumps and basins indicating dimensions, accessory components and connections to other equipment and piping.
   2. Provide electrical characteristics and connection requirements.
   3. Provide data on all accessory components.

D. Manufacturer's Installation Instructions.

E. Provide a separate line item and cost on the Schedule of Values for sanitary ejector pump.

1.05 OPERATION AND MAINTENANCE DATA

A. Submit under provisions of Section 017823.

B. Include the following information:
   1. Instructions for starting and operating equipment.
   2. Operating limits which, if exceeded, may result in hazardous or unsafe conditions.
   3. Cleaning, preventive maintenance, and lubrication schedule and procedures.
   4. List of special tools, maintenance materials, and parts.
   5. Guide for troubleshooting of operating problems.
   6. Recommendation for service check frequency.

1.06 REGULATORY REQUIREMENTS

A. Perform Work in accordance with Illinois Plumbing Code.

B. Ensure products and installation of specified products are in conformance with recommendations and requirements of the following organizations:

1. National Sanitation Foundation (NSF).
2. American Society of Mechanical Engineers (ASME).
3. National Electrical Manufacturers' Association (NEMA).
4. Underwriters Laboratories (UL).

1.07 DELIVERY, STORAGE, AND HANDLING

A. Deliver, store, protect and handle products to site under provisions of Section 016000.

PART 2 - PRODUCTS

2.01 MANUFACTURER & PERFORMANCE

A. Unless otherwise specified the manufacturer’s number specified or scheduled is listed merely as an aid to prospective bidders. In most cases it is an incomplete number and relies upon the written description to fully define the item. Where model numbers define a single manufactured item which does not include the items include in the written description, the model number shall be modified as required to most closely meet the described requirements.

2.02 SEWAGE EJECTOR PUMP

A. Acceptable Manufacturers:
1. Aurora Pump/General Signal Corporation.
2. Hydromatic.
3. Weil Pump Company.

B. Description:
1. Configuration: Simplex grinder type with fiberglass basin; removable steel cover and capacity to handle (2”) solids.
2. Casing material: Cast iron.
3. Impeller: Phenolic.
4. Shaft material: Stainless steel.
5. Bearings: Grease-lubricated ball bearings, factory-sealed.
6. Seal: Manufacturer’s standard.
7. Motor:
   a. Totally enclosed.
   b. Oil filled or hermetically sealed air filled.
   c. Size: Non-overload protection.
   d. Thermal overload protection.
   e. Cord and plug: 10’ length of PVC cord (three-conductor), and molded grounding plug.
8. Controls shall include:
   a. Micro pressure or float switch level controls. For high water level; cycle pump on. For low water level; cycle pump off.
   b. NEMA 4 enclosure with sunlight resistant finish.
   c. Indicator lights.
   d. Motor starters and disconnects and alternators.
   e. Alarms shall have indicator light, horn, reset switch and high level alarm float.
9. Basin:
   a. Shall be constructed of fiberglass reinforced polyester resin using commercial grade materials of multiple laminates to maintain the strength required for the dimensions of the unit.
   b. Shall have integral flange installed at base or sides as an anti-flotation device.
   c. Shall have field mountable flanged intake configured to the size of the unit.

d. Shall have pre-Fabricated vent connection sized for the attachment of 2" no hub cast iron.
e. Epoxy coated steel lid with gasketed pump access openings, grommeted wire penetrations, pipe discharge openings, bracket for control panel mounting. Lid shall be gasketed to the fiber glass basin and held in place with stainless steel bolts held in place by stainless steel or bronze nuts anchored into fiber glass upper basin flange.

PART 3 - EXECUTION

3.01 SEWAGE EJECTOR PUMP/SUMP PUMP INSTALLATION

A. See details on drawings and manufacturers instructions.

B. Backfill receivers with granular fill. Do not allow concrete in receivers or on tops. Lubricate top bolts before attaching to receiver.

C. Install control panels. Assemble as required. Provide inter connecting wiring and conduit.

D. Support piping independent of the pump and check valve. Install check valve with top 12" below the top of the basin.

E. Route piping out of basin above floor.

F. Trim vent collar from sump lid to act as drain entry into sump.

G. Support alarm contact on discharge pipe so that it will close if water rises to within 12" of sump top. Secure with nylon wire ties. Route cords out of sump receiver lid. Seal openings where cords pass.

H. Secure cords to pit walls with nylon cable supports and stainless steel screws with plastic masonry anchors. Provide support on 18" centers. Route cords through walls using conduit sleeve.

3.05 TESTING/COMMISSIONING

A. Fill sump pump basins with water. Test pumps, controls and alarms and in the company of the Architect/Engineer or Owner's designated representative. Correct improper operation.

END OF SECTION 221419

SECTION 221400 – STORM DRAINAGE PIPING

PART 1 - GENERAL

1.01 WORK INCLUDES

A. Base Bid:
1. Contractor Provide:
   a. Sump pump discharge pipe.
   b. Footing tile pipe and under floor drainage pipe. See notes on Sheet P101 concerning this particular work.

1.02 DESCRIPTION

A. Definitions
1. S.P.D. pipe is sump pump discharge pipe.
2. Plumbing Contractor = Plumbing Subcontractor or Plumbing Trade.
3. FT pipe is footing tile pipe.

1.03 RELATED WORK

A. Specified Elsewhere:
1. 220529 – Supports and Anchors for Plumbing.
2. 220553 – Identification for Plumbing Piping and Equipment.

1.04 REFERENCES

A. ASTM D-1785 – Poly Vinyl Chloride (PVC) Plastic Pipe Schedules 40, 80 and 120.

B. ASTM D2466 – Poly Vinyl Chloride (PVC) Plastic Pipe Fittings, Schedule 40.

C. ASTM D2564 – Solvent Cements for Poly Vinyl Chloride (PVC) Plastic Pipe and Fittings.

D. ASTM D2855 – Making Solvent Cement Joints with Poly Vinyl Chloride (PVC) Pipe and Fittings.

E. ASTM F477 – Elastomeric Seals (Gaskets) for Joining Plastic Pipe.

1.05 SUBMITTALS

A. Submit under provisions Section 013300.

B. Product Data: Provide data on no hub connectors and piping accessories. Provide manufacturers catalog information.

C. Provide a cost of all pump discharge work as a separate line item on the Schedule of Values. Provide a separate cost for footing tile.

1.06 PROJECT RECORD DOCUMENTS

A. Submit under provisions of Section 017839.

B. Record actual locations of cleanouts. Record lateral and vertical locations of underfloor and underground pipe. Locate in relation to walls and surfaces which extend beyond concealing surfaces.

C. Obtain A/E review of record documents before or at each pay progress meeting.

1.07 REGULATORY REQUIREMENTS

A. Perform Work in accordance with the International Plumbing Code 2006.

1.08 DELIVERY, STORAGE, AND HANDLING

A. Deliver, store, protect and handle products to site under provisions of Section 016000.

B. Provide temporary end caps and closures on piping and fittings. Maintain in place until installation.

C. Protect piping systems from entry of foreign materials by temporary covers, completing sections of the work, and isolating parts of completed system.

1.09 CONNECTION COORDINATION

A. New Work:
1. Protect new systems form dirt infiltration caused by construction activity. New pipe shall be clean on the substantial completion date.

1.10 ENVIRONMENTAL REQUIREMENTS

A. Do not install underground piping when bedding are wet or frozen.

PART 2 - PRODUCTS

2.01 MANUFACTURER & PERFORMANCE

A. Unless otherwise specified the manufacturer’s number specified or scheduled is listed merely as an aid to prospective bidders. In most cases it is an incomplete number and relies upon the written description to fully define the item. Where model numbers define a single manufactured item which does not include the items include in the written description, the model number shall be modified as required to most closely meet the described requirements.

2.02 PLASTIC PIPE FOR UNDER FLOOR AND ABOVE FLOOR PUMP DISCHARGE PIPE

A. PVC Pressure Pipe ASTM D1785.
1. Fittings: ASTM D2466.
2. Connections solvent weld ASTM D5264.

2.03 FOOTING TILE AND UNDERFLOOR DRAINAGE PIPE

A. Footing Tile and Underfloor Infiltration Pipe:
1. Shall be corrugated black polyethylene single wall smooth wall interior.

2. Shall have knife slot perforations cut into corrugations.
3. Shall have geotexlile fabric sock pulled over entire length.
4. Shall have manufactured wye, tee, elbow and cap fittings used for connection and sharp charges in direction.

B. Non-Absorptive Transport Pipe:
1. Shall be as described above without the sock.

2.04 BACK WATER VALVES

A. For Sump Pump Discharge:
1. Shall be PVC or ABS construction.
2. Shall have removable 6″ white PVC threaded lid.
3. Shall be designed for horizontal flow and gravity operation.
4. Shall be listed by nationally recognized testing agency.
5. Shall have elastomeric seals and EPDM Flapper Seal.
6. Shall conform to ASME/ANSI A112.14.1.
7. Shall be rated for 43 psi at 73 degrees F.

B. Acceptable Products:
1. Oaley 4″ PVC Back Water Valve
2. Spears S475P

2.05 SOTP AND CHECK VALVES

A. Stop valves shall be PVC plastic ball type with union ends and socket solvent weld connections. Valves shall have full port design, Teflon seats, EPDM o-rings, seals and lever handle.

B. Check valves shall be PVC plastic ball type with union ends, solvent weld connections. Valve shall operate in horizontal or vertical positions.

C. Acceptable Products:

	Ball Valve	Check Valve
1. NIBCO	Tru-Bloc Series	U45BC Series

PART 3 - EXECUTION

3.01 EXAMINATION

A. Examine areas and conditions under which storm drainage piping and footing tile is to be installed.

B. Verify that excavations are to required grade, dry, not over-excavated, and free of debris and stones.

C. Verify piping at new connection points is in sound condition.

D. Correct any unsatisfactory conditions before beginning installing piping products of this section. Commencement of installation indicated acceptance of conditions.

3.02 PREPARATION

A. Ream pipe and tube ends. Remove burrs. Bevel PVC pipe.

B. Remove scale and dirt, on inside and outside, before assembly.

3.03 EXCAVATION, BEDDING AND BACKFILL

A. Excavate existing fill and material to locate existing piping and to install new. Granular materials shall be saved for reuse providing it is not polluted with mud or building debris.

B. Install new underfloor and underground piping on compacted granular cradle bedding. Install at least 3 inches of bedding above and below pipe. Use clean p-gravel or sand as bedding. Under floor footing tile pipe shall use drainage bed specified and detailed on Structural Drawings.

C. Remaining backfill shall be what was removed from excavation less debris or shall be bedding material. Compaction requirements of structural drawings and specifications shall be met over trench areas.

3.04 INSTALLATION

A. Install pipe in accordance with manufacturer's instructions.

B. Route piping in orderly manner and maintain gradient.

C. Install piping to conserve building space and not interfere with use of space. Install pipe parallel or at right angles to building walls. Diagonal runs shall be as shown on drawings.

D. Group piping whenever practical at common elevations.

E. Install piping to allow for expansion and contraction without stressing pipe, joints, or connected equipment. Install fittings at changes in direction.

F. Connecting components of unequal size: Install standard reducers or increasers, correctly sized for application indicated.
   1. Do not reduce size of drainage piping in the direction of flow.
   2. Use manufactured fittings.

G. Clearances:
   1. Finished piping insulation minimum clearance: 1”, all around.

H. Support and anchor pipe as specified in Section 220529.

I. Joints:
   1. PVC pipe:
      a. Solvent-welded joints:
         1. Conform to requirements of ASTM D 2855.
      b. Push on joints:
         1. Make with manufacturers recommended lubricant.

J. Pump Discharge Pipe:
   1. Pitch: Pitch pipe in accord to notes on drawings. If not shown, pitch at a minimum of 0.5 percent.
   2. Underground Building Drains:
      a. Start drain into sump pit at system’s lowest point. Maintain alignment and grade indicated and provide uninterrupted continuity of invert. Pipe shall run dead level where shown.
      b. Install piping with hub on upstream end of pipe.

c. Comply with manufacturer’s instructions for installation of gaskets. Use only recommended lubricants and sealants.
d. Confirm each section of pipe does not contain dirt.
e. Pump discharge pipe shall pitch as noted on Drawings so that majority runs to (e) storm inlet and remainder runs to sump pump.

3. Exterior Piping:
   a. Provide a continuous mylar warning ribbon as specified in Section 220553 16″ below grade.
   b. Install pipe as noted below.

3.05 APPLICATION

A. Application Chart:

Use Description	Pipe Type	Fitting Type
1. Pumped Discharge Pipe Above and Below Ground	Schedule 40 PVC	Solvent Weld
2. Footing Tile	Corrugated Poly ethylene	Push On
3. Above Ground Storm	Schedule 40 PVC	Solvent Weld

END OF SECTION 221400

SECTION 221429 – SUMP SUMPS

PART 1 - GENERAL

1.01 WORK INCLUDES

A. Base Bid:
1. Contractor Provide:
   a. Elevator sump pump and basin and alarms.
   b. New duplex under floor drainage sump pump, basin and alarms.

1.02 RELATED WORK

A. Specified Elsewhere:
1. 220553 – Identification for Plumbing Pipe and Equipment.
2. 221400 - Storm Drainage Piping.

1.03 REFERENCES

A. ANSI/ASHRAE 90A - Energy Conservation in New Building Design.

B. ANSI/NFPA 70 - National Electrical Code.

1.04 SUBMITTALS

A. Submit under provisions of Section 013300.

B. Product Data:
1. Provide electrical characteristics and connection requirements.
2. Provide data on all accessory components.
3. Provide pump curves or performance charts for the pump. Single points are not acceptable.

C. Manufacturer's Installation Instructions.

D. Submit line item price for sump pumps on Schedule of Values. Identify supplier vendor.

1.05 OPERATION AND MAINTENANCE DATA

A. Submit under provisions of Section 017823.

B. Include the following information:
1. Instructions for starting and operating equipment.
2. Operating limits which, if exceeded, may result in hazardous or unsafe conditions.
3. Cleaning, preventive maintenance, and lubrication schedule and procedures.
4. List of special tools, maintenance materials, and parts.
5. Guide for troubleshooting of operating problems.

1.06 REGULATORY REQUIREMENTS

A. Perform Work in accordance with Illinois Plumbing Code.

B. Ensure products and installation of specified products are in conformance with recommendations and requirements of the following organizations:
1. National Sanitation Foundation (NSF).
2. National Electrical Manufacturers' Association (NEMA).
3. Underwriters Laboratories (UL).

1.07 DELIVERY, STORAGE, AND HANDLING

A. Deliver, store, protect and handle products to site under provisions of Section 016000.

PART 2 - PRODUCTS

2.01 MANUFACTURER & PERFORMANCE

A. Unless otherwise specified the manufacturer’s number specified or scheduled is listed merely as an aid to prospective bidders. In most cases it is an incomplete number and relies upon the written description to fully define the item. Where model numbers define a single manufactured item which does not include the items include in the written description, the model number shall be modified as required to most closely meet the described requirements.

2.02 SUMP PUMPS

A. Basin:
   1. Basin for Under Floor Drainage Pump:
      a. Shall be constructed of fiberglass reinforced polyester resin using commercial grade materials of multiple laminates to maintain the strength required for the dimensions of the unit.
      b. Shall have integral flange installed at base or sides as an anti-flotation device.
      c. Shall have field mountable flanged intake configured to the size of the unit.
      d. Shall have pre-Fabricated vent connection sized for the attachment of 2" Schedule 40 PVC.
      e. Shall have stainless steel or epoxy coated steel lid with gasketed pump access openings, grommeted wire penetrations, pipe discharge openings, bracket for control panel mounting. Lid shall be gasketed to the fiber glass basin and held in place with stainless steel bolts held in place by stainless steel or bronze nuts anchored into fiber glass upper basin flange.
   2. Basin for elevator sump shall be fiberglass. Lid shall be epoxy coated steel with holes drilled through to allow drainage to sump.

B. Pumps shall be submersible type rated for flow and head noted on the drawings. Unit shall be all cast iron construction with galvanized steel guard and handle. Provide shaft seals. Provide pumps in the number as noted on the Drawings.

C. Motor shall be hermetically sealed oil or air filled permanent split capacitor type with automatic reset overload protection. It shall operate at no more than 1750 rpm.

D. Control shall be float operated top mounted unit with horsepower rated contacts. Float shall be polypropylene or foam. Pump shall be prewired with switch and grounded cord set of 9'-0" minimum length.

E. High level alarm shall include independent all position gravity float switch. High level alarm shall include warning light and horn, manual silence switch contact connections and 120 volt prewired grounded plug and cord set.

F. Check valve shall be inline ball type with neoprene connections. It shall be full size of pumps discharge.

G. Acceptable Products: See Drawings for Basis-of-Design. Equipment of manufacturers noted below will be acceptable if it meets this specification.

	Ground Water	Elevator
1. Weil (Basis of Design	1413	1422
2. Metropolitan	Equivalent	Equivalent
3. Goulds	Equivalent	Equivalent
4. Auroa	Equivalent	Equivalent

PART 3 - EXECUTION

3.01 SUMP PUMP INSTALLATION

A. See details on drawings and manufacturers instructions.

B. Backfill receivers with granular fill. Do not allow concrete in receivers or on tops. Lubricate top bolts before attaching to receiver.

C. Install control panels. Assemble as required. Provide inter connecting wiring and conduit.

D. Support piping independent of the pump and check valve. Install check valve with top 9" below the top of the basin of elevator sump.

E. Route piping out of basin above floor. Route out of elevator pit by following floor of elevator pit and up shaft wall. Discharge shall be as shown on Drawings.

F. Trim vent collar from sump lid to act as drain entry into sump.

G. Support alarm contact on discharge pipe so that it will close if water rises to within 6" of sump top. Secure with nylon wire ties. Route cords out of sump receiver lid.

H. Secure cords to pit walls with nylon cable supports and stainless steel screws with plastic masonry anchors. Provide support on 18" centers. Route cords through walls using conduit sleeve. Firestop cord per Section 220529.

I. Locate elevator sump pump alarm as shown. Locate building sump pump alarms as part of the sump pump control panel. Label alarms with engraved plaques in accord to Section 220553.

END OF SECTION 221429

SECTION 223100 - DOMESTIC WATER SOFTENER

PART 1 - GENERAL

1.01 WORK INCLUDES

A. Base Bid:
   1. Contractor Provide:
      a. Water softener shown.
      b. Startup of softener including 300 lbs of salt.

1.02 RELATED WORK

A. Specified Elsewhere:
   1. 220553 - Identification of Plumbing Pipe.
   2. 220800 - Commissioning of Plumbing.
   3. 221100 - Domestic Water Pipe.
   4. 221119 - Domestic Water Piping Specialties.
   5. 224000 - Plumbing Fixtures.
   6. 223300 - Water Heaters.

1.03 REFERENCES

A. ANSI/ASHRAE 90A - 2007 Energy Conservation in New Building Design.

1.04 SUBMITTALS

A. Submit under provisions of Section 013323.

B. Product Data:
   1. Include dimension drawings of water softeners indicating dimensions, accessory components and connections to other equipment and piping.
   2. Provide electrical characteristics and connection requirements.
   3. Provide data on all accessory components.

C. Manufacturer's Installation Instructions.

D. Manufacturer's startup check list.

1.05 OPERATION AND MAINTENANCE DATA

A. Submit under provisions of Section 017823.

B. Include the following information:
   1. Instructions for starting and operating equipment.
   2. Operating limits which, if exceeded, may result in hazardous or unsafe conditions.
   3. Cleaning, preventive maintenance, and lubrication schedule and procedures.
   4. List of special tools, maintenance materials, and parts.
   5. Guide for troubleshooting of operating problems.

1.06 REGULATORY REQUIREMENTS

A. Perform Work in accordance with Illinois Plumbing Code.

B. Ensure products and installation of specified products are in conformance with recommendations and requirements of the following organizations:
   1. National Sanitation Foundation (NSF).

2. American Society of Mechanical Engineers (ASME).
3. National Electrical Manufacturers' Association (NEMA).
4. Underwriters Laboratories (UL).

1.07 DELIVERY, STORAGE, AND HANDLING

A. Deliver, store, protect and handle products to site under provisions of Section 016000.

B. Keep water softner covers protected from dents and scratches.

1.08 WARRANTY

A. Provide one year warranty.

PART 2 - PRODUCTS

2.01 MANUFACTURER & PERFORMANCE

A. Unless otherwise specified the manufacturer’s number specified or scheduled is listed merely as an aid to prospective bidders. In most cases it is an incomplete number and relies upon the written description to fully define the item. Where model numbers define a single manufactured item which does not include the items include in the written description, the model number shall be modified as required to most closely meet the described requirements.

2.02 WATER SOFTENER

A. Scheduled Data:
1. Minimum total exchange capacity shall be 14,000 grains. Minimum exchange per 1 lb. of salt shall be 2,000 grains.
2. Unit shall be capable of a continuous service flow of 10 gpm with a 15 psi pressure drop.
3. Unit shall contain minimum of 1.0 cubic feet of resin per tank.
4. Salt storage capacity shall be minimum of 200 lbs.
5. Pipe connection size shall be 1″ SWEAT in and out.
6. Maximum floor foot print shall be 36″ x 18″.

B. Construction and Configuration:
1. Softener shall be constructed of fiberglass reinforced polyester resin, or epoxy lined carbon steel with minimum 125 psig working pressure. Test pressure shall be 187 psig minimum.
2. Brine tanks shall be molded polyethylene with lid and salt shelf.
3. Brine controls shall be field serviceable and adjustable. Controls shall provide positive shutoff of air into the system.
4. Regeneration pumps shall be venturi type operating with water.

C. Resin:
1. Shall be virgin high capacity sulfonated polystyrene type stable over entire pH range. Capacity shall meet schedule requirements.
2. Back wash shall have adjustable discharge.

D. Controls shall be:
1. Non electric.
2. Volume initiated through non electric meter.
3. Automatic bypass type using duplex tanks with one tank providing all water required during regeneration cycle.
4. Be capable of manual regeneration.

E. Accessories shall include:
   1. Sample cocks on inlet and outlet.
   2. Pressure gauges on inlet and outlet.
   3. Soap drop test water hardness test kit.

F. Startup Materials and Activities shall include:
   1. Minimum of 200 lbs. of high purity pellet type water softener salt.
   2. Startup and Owner training by a factory authorized service representative.

G. Acceptable Products:
   1. Kinetico S250

PART 3 - EXECUTION

3.01 WATER SOFTENER

A. Installation:
   1. Provide all materials and devices required for a complete functioning and code worthy system.
   2. Install on 3-1/2″ housekeeping pad.
   3. Provide with service valves on inlet and outlet and provision for manual bypass.
   4. Pipe brine water and backwash water in PVC pipe. Terminate backwash over a hub drain or stand pipe capable of accepting backwash flow.
   5. Shall be performed by a factory trained representative.

B. Commissioning:
   1. Install salt and fill.
   2. Set regeneration volume. Set brine dosage.
   3. Show owner’s representative how to determine hardness using testing accessory. Determine hardness and pre-set water amount for regeneration trigger.

3.06 TESTING/COMMISSIONING

A. Test hand water and soft water samples.

B. Executed manufacturer's startup check list.

END OF SECTION 223100

SECTION 223300 - WATER HEATERS

PART 1 - GENERAL

1.01 WORK INCLUDES

A. Base Bid:
   1. Contractor Provide:
      a. Tank water heater and accessories.

1.02 RELATED WORK

A. Specified Elsewhere:
   1. 221100 - Water Piping.
   2. 221119 - Domestic Water Piping Specialties.
   3. 224000 - Plumbing Fixtures.

1.03 REFERENCES

A. ANSI/ASHRAE 90A 2007 - Energy Conservation in New Building Design.

B. ASME Section VIIID - Pressure Vessels; Boiler and Pressure Vessel Codes.

C. ANSI/NFPA 70 - National Electrical Code.

1.04 SUBMITTALS

A. Submit under provisions of Section 013300.

B. Product Data:
   1. Include dimension drawings of water heaters indicating dimensions, accessory components and connections to other equipment and piping.
   2. Provide electrical characteristics and connection requirements.
   3. Provide data on all accessory components.

C. Manufacturer's Installation Instructions.

D. Provide individual line item cost for installation of water heaters on the Schedule of Values.

1.05 OPERATION AND MAINTENANCE DATA

A. Submit under provisions of Section 017823.

B. Include the following information:
   1. Instructions for starting and operating equipment.
   2. Operating limits which, if exceeded, may result in hazardous or unsafe conditions.
   3. Cleaning, preventive maintenance, and lubrication schedule and procedures.
   4. List of special tools, maintenance materials, and parts.
   5. Guide for troubleshooting of operating problems.

1.06 REGULATORY REQUIREMENTS

A. Perform Work in accordance with Illinois Plumbing Code.

B. Ensure products and installation of specified products are in conformance with recommendations and requirements of the following organizations:
   1. National Sanitation Foundation (NSF).
   2. American Society of Mechanical Engineers (ASME).

3. National Electrical Manufacturers' Association (NEMA).
4. Underwriters Laboratories (UL).

1.07 DELIVERY, STORAGE, AND HANDLING

A. Deliver, store, protect and handle products to site under provisions of Section 016000.

B. Keep water heater covers protected from dents and scratches.

1.08 WARRANTY

A. Provide three year warranty for tank type heater. Warranty shall include full tank.

B. Warranty: Include coverage of domestic water heaters.

PART 2 - PRODUCTS

2.01 MANUFACTURER & PERFORMANCE

A. Unless otherwise specified the manufacturer’s number specified or scheduled is listed merely as an aid to prospective bidders. In most cases it is an incomplete number and relies upon the written description to fully define the item. Where model numbers define a single manufactured item which does not include the items include in the written description, the model number shall be modified as required to most closely meet the described requirements.

2.02 MEDIUM DUTY COMMERCIAL ELECTRIC WATER HEATER

A. Type: Automatic, electric short tank type.

B. Performance: See Drawing.

C. Tank: Glass limed welded steel, thermally insulated with non CFC foam in accord to ASHRAE 90.1-2007; encased in corrosion-resistant steel jacket; baked-on enamel finish.
1. Connections shall be minimum of 1” NPT.
2. Connections shall be di-electric.
3. Tank warranty shall be three year duration.

D. Controls: Automatic water thermostat with adjustable temperature range from 100 - 140 degrees F, flanged or screw-in nichrome elements, enclosed controls and electrical junction box.

E. Accessories: Brass water connections and dip tube, high-density magnesium anode, and ASME temperature and pressure relief valve. Drain valve shall be brass.

F. Electric elements shall be “Incoloy” direct emersion type with “screw-in” or flanged connection to tank.

G. Acceptable Products.

		Medium Duty
1.	A.O Smith	DRE Series
2.	Bradford White	E-32
3.	Lochinvar	HC(X) Series

2.03 WATER HEATER ACCESSORIES

A. Vacuum relief valve – shall be of brass construction with a 1/2″ male NPT connection. It shall be rated for a water working pressure of 200 psig and a working temperature of 250 degrees F. It shall have venting capacity of 13 cfm.

B. Temperature/Pressure Relief Valves:
1. Shall be ASME rated.
2. Shall be self-closing poppet style.
3. Shall have thermostatic relief element actuated at 210 degrees F.
4. Shall have pressure relief element actuated at 125 psig.
5. Shall be self-closing.
6. Shall be sized to accommodate full heater input capacity.

C. Acceptable Products:

		T&P Valve	Vacuum Relief
1.	Conbraco	18 Series	37-101
2.	Watts	L Series	N36
3.	Wilkins	TP Series	VR10

2.04 DIAPHRAGM-TYPE COMPRESSION TANKS

A. Construction: Welded steel with flexible EPDM or butyl diaphragm sealed into tank, polyethylene liner and brass connections. Assembly shall be certified to ANSI/NSF 61.

B. Accessories: Pressure gage and air-charging fitting, tank drain; precharge to 53 psig.

C. Size: Acceptance volume shall be 3.05 gallon minimum.

D. Manufacturer:

1.	Amtrol	Therm-X-Trol.
2.	A. O. Smith	Air Bank.
3.	Rheem	Therm-X-Guard.
4.	Wilkins	WXTD Series.

PART 3 - EXECUTION

3.01 WATER HEATER INSTALLATION

A. Install water heaters in accordance with manufacturer's instructions and to NSF, ANSI/NFPA 54, UL, and Illinois Plumbing Code requirements.

B. Coordinate with plumbing piping and electrical work to achieve operating system.

C. Isolate heaters with valves on both inlet and outlet.

D. Pipe heaters to allow future removal.

E. Start-up and commissioning shall be supervised by a factory trained representative.

3.02 COMPRESSION TANK INSTALLATION

A. Install tanks in accordance with manufacturer's instructions.

B. Provide support for tanks, from building structural framing members independent of pipe.

END OF SECTION 223300

SECTION 224000 - PLUMBING FIXTURES

PART 1 - GENERAL

1.01 WORK INCLUDES

A. Base Bid:
   1. Contractor Provide:
      a. Water closets, urinals, lavatories and trim.
      b. Service sinks and trim.
      c. Electric water coolers and trim.
      d. Counter sinks and trim.
      e. Faucets and drainage trim for countertop lavatories furnished
      f. Blocking in walls to support lavatories, sinks, stops, and electric water coolers.
      g. Re-install the sink in the current boiler room.

B. Work by Others.
   1. Lavatory/countertops shall be furnished and hung per Section 064023.

1.02 RELATED WORK

A. Specified Elsewhere:
   1. 123661 - Simulated Stone Countertops.
   2. 220529 – Supports and Anchors for Plumbing.
   3. 221100 - Water Piping.
   4. 221119 – Domestic Water Piping Specialties.
   5. 221300 – Sanitary Piping.
   6. 221319 – Sanitary Water Piping Specialties.

1.03 DESCRIPTION

A. Definitions:
   1. Plumbing Contractor = Plumbing Subcontractor for this work.
   2. Trim includes those devices which are attached to fixtures and are integral with the fixture function. Examples are as follows:
      a. Sink and lavatory trim includes faucets, sprayers, basket strainers, tail pieces, p-traps, stops and risers.
      b. Water closet trim includes flush valves, stops and risers, seats, and bolt covers.
      c. Urinal trim includes flush valves.
   3. Sinks have bowls with drains over which faucets deliver domestic hot and cold water.
   4. Lavatories resemble sinks; but their exclusive use is for hand washing.

1.04 REFERENCES

A. ANSI/ASME A112.6.1 - Supports for Off-the-Floor Plumbing Fixtures for Public Use.

B. ASME A112.18.1 - Finished and Rough Brass Plumbing Fixture Fittings.

C. ANSI/ASME A112.19.2 - Vitreous China Plumbing Fixtures.

D. ANSI/ASME A112.19.5 - Trim for Water-Closet Bowls, Tanks, and Urinals (Dimensional Standards).

E. ANSI/ARI 1010 - Drinking-Fountains and Self-Contained, Mechanically-Refrigerated Drinking-Water Coolers.

1.05 REGULATORY REQUIREMENTS

A. Illinois Plumbing Code.

B. Illinois Accessibility Code.

C. Americans with Disabilities Act 1990 as amended in 2008.

1.06 SUBMITTALS

A. Submit under provisions of Section 013300.

B. Product Data: Provide catalogue illustrations of fixtures, sizes, rough-in dimensions, utility sizes, trim, and finishes.

C. Provide certifications that ADA requirements and specified standards are met.

D. Provide separate line item for Contractors Schedule of Values.

1.07 OPERATION AND MAINTENANCE DATA

A. Submit under provisions of Section 017823.

B. Maintenance Data: Include fixture trim exploded view and replacement parts lists.

1.08 DELIVERY, STORAGE, AND HANDLING

A. Deliver, store, protect and handle products to site under provisions of Section 016000.

B. Accept fixtures on site in factory packaging. Inspect for damage. Institute procedures for replacement of damaged fixtures immediately.

C. Protect installed fixtures from damage by securing areas and by leaving factory packaging in place to protect fixtures and prevent use.

1.09 COORDINATION

A. Rough-in coordination shall be made using reviewed and accepted product data and shop drawings.

B. Provide dimensions to concrete and drywall trades of such items as recessed showers, and water closet carriers so that floor depressions and stud spacing can be coordinated.

1.10 WARRANTY

A. Provide two year warranty for water cooler compressor.

B. Manufacturer’s material warranty of 3 years for flush valves.

1.11 EXTRA MATERIALS

A. Furnish under provisions of Section 017823.

B. Provide two sets of faucet washers and flush valve service kits. Deliver to Owners representative. Obtain signed receipt.

PART 2 - PRODUCTS

2.01 MANUFACTURER & PERFORMANCE

A. Unless otherwise specified the manufacturer’s number specified or scheduled is listed merely as an aid to prospective bidders. In most cases it is an incomplete number and relies upon the written description to fully define the item. Where model numbers define a single manufactured item which does not include the items included in the written description, the model number shall be modified as required to most closely meet the described requirements.

2.02 WATER CLOSETS

A. Commercial/Institutional Type:
1. Water Closet WC-1 and WC-2 shall be white vitreous china with elongated front bowl; siphon jet flushing action of 1.6 gallons per flush; top spud for flush valve. Unit shall be wall mounted for chair carrier.
2. Water Closet WC-4 shall be child size white vitreous china, syphon jet flushing action; 1.6 gallons per flush. Unit shall be floor mounted with bottom drain connection at 10” from finished wall. Rim shall be 10 to 11” above finished floor. Trapway shall be glazed. Unit shall flush with 1.28 to 1.6 gallons per flush.
5. Water closet WC-3. Shall be floor mounted white vitreous china with elongated bowl. Trapway shall be minimum 2-1/8” diameter and be glazed. Water surface shall be minimum of 8" x 8" size. Shall accept top mounted exposed flush valve and operate at 1.6 gallon per flush. Rim shall be minimum of 16.5” above floor.

B. Seats:
1. Seats for WC-1 and WC-2 and 3 shall be institutional form curved solid grade white anti-microbial plastic with integral bumpers and open front. Hinges shall be stainless steel non hold open type. Bolts shall be stainless steel with conical self-centering locking nuts and washers.
3. Seats for WC-4 shall match the water closet.

D. Carriers - shall have side or bottom outlets as required; just be compact configuration as required; shall be back to back as required, shall include chrome plated (tamperproof) nuts, vent connections, auxiliary connections as required, gaskets and mounting flanges. Construction shall be cast iron. Configuration shall be adjustable except where compact configuration is required. Provide auxiliary foot supports where carrier face is over 4” from closet face and chase walls are not masonry construction.

E. Acceptable Products: (Commercial Water Closets)

		WC-1 & WC-2 Wallmount
1.	American Standard	AFWall 1000g
2.	Kohler	Kingston
3.	Zurn	Z5610
4.	Vortens	Atenas ADA Flux Het

F. Acceptable Products:

		WC-3 Flush Valve Flr	WC-4 Child Height
1.	American Standard	Colorado	Baby Devoro
2.	Kohler	High Cliff	Primary
3.	Zurn	Z5660	Z5670

G. Acceptable Products: (Seats)

		Childs Toilet	Institutional
1.	Centoco	---	1500CC
2.	Zurn	---	Z5956SS-EL
3.	Bemis	2055CT	3155C
4.	Comfort Seats	---	C108C-AM
5.	Mansfield	Smart Close	---

I. Acceptable Products: (Carriers)

		Vertical	Horizontal
1.	Wade	W340 Series	W310 Series
2.	Zurn	Z1204 Series	Z1203 Series
3.	Mifab	MC12 Series	MC10 Series

2.03 FLUSH VALVES

A. Flush valves shall be exposed chrome plated diaphragm type with anti-microbial handle. Valve shall include vacuum breaker, integral stop, clog-resistant bypass and volume regulator. Provide extension to match mounting height shown.

B. Provide with fully chromed wall flange.

C. Provide floor drain trap primer connection for designated units.

D. Flush valves for WC-1, WC-2 and WC-3 shall be 1-1/2” size and include chrome plated ring supports.

E. Flush valves for urinals match 1.0 gallon/flush requirement and spud size of urinals.

F. Acceptable Products:

		Water Closet	Urinal
1.	Sloan	Royal	Royal
2.	Zurn	Z-6000AV Series	Z-6003AV Series

2.04 LAVATORY

A. Lavatories shall be white vitreous china with flat faucet desk drilled for 4″ centers for either center feed faucet with tubular connections or dual fed faucets with 1/2″ NPT. Unit shall have integral front overflow drain.

B. LAV-2 lavatories shall be 20″ – 21″ x 18″. They shall be listed as ADA Compliant by manufacturers. It shall be wall mounted type drilled for concealed carrier arms. They shall have integral backsplash and soap shelf.

C. Acceptable Products:

	ADA Wallmount 20 x 18
1. American Standard	Lucerne
2. Kohler	Kingston
3. Zurn	Z5344

D. Lavatory 1 shall be as specified in 06 40 23.

E. Lavatory Faucets:
1. Faucets shall have lead-free cast brass chrome plated body. Spouts shall extend a minimum of 4″. Configuration shall be 4″ center set deck mount. Valve handles shall be chrome plated and color indexed. Faucet connections shall be 1/2″ NPT. Faucet valves shall be interchangeable with those for sink faucets where cartridge has the same action.
2. Faucets shall be two handle type with 90 or 180 degree valve action and washerless valves. Valve handles shall be color coded for temperature, shall be brass lever type and shall meet ADA. Handles shall be 4″ paddle type. Faucet bodies shall be chrome plated brass without external plastic parts. Faucet connections shall be 1/2″ NPT type. Faucet shall be repairable from top of deck. Valves shall have 1/4 turn non-rising stem action using a replaceable machined brass cartridge with o-ring seals or stainless steel and ceramic cartridges. Aerator shall be 0.5 gpm.

3. Acceptable Products:

	(LAV 1 & 2) Above Deck Two Handle
a. Chicago	802 Series
b. Bradley	90-80 Series
c. Delta	21T Series
d. Zurn	Z81100
e. Symmons	S-250 Series

F. Drainage trim shall be chrome plated 17 gauge cast brass with swivel connections. Furnish with wall escutcheons. Tail piece for designated LAV-1 shall be straight type with strainer. Tail pieces for LAV 2 shall be offset type with strainer. Acceptable Products - McGuire, Engineered Brass Company, Cambridge Brass, or Zurn Specification Traps

G. Supplies and stops shall be chrome plated angle type with chrome plated flexible connectors, wheel handle and connections to match piping and faucets. Furnish with wall escutcheons. Acceptable Products McGuire, Engineered Brass Company, Cambridge or Zurn Specification Supplies

H. Lavatory Carrier:
1. Adjustable floor supported concealed arm type shall:
a. Have tubular legs, backer plates, cast iron or steel adjustable arms and cast iron feet.
b. Assembly shall be set screw type.

I. Handicapped Lavatory Trim Covers.
1. Shall conform to ADA requirements.
2. Shall be molded vinyl or vinyl covered foam sheeting formed to P-Trap, tail pieces (straight or offset) off set and stops. Fasteners shall be nylon wire ties or plastic sex bolts.
3. Acceptable Products:

a.	Plumberex	Pro-Extreme or Handi-Shield.
b.	Engineered Brass Company	Institutional.
c.	TCI Products	Skal & Gard.
d.	Zurn	Insul Guard

2.05 WORK SINKS

A. Utility Sink (SK-3): Shall be die molded of inorganic fiber and polyester resin binder. Size shall be 23″ x 21″ x 13″ high. Top shall have faucet deck guard with soap dishes. Tub shall have cast in sockets for legs and radius cornered. Legs shall be steel with baked enamel coating and adjustable feet. Strainer shall be flat stainless steel.

B. Faucets for SK-3 shall be chrome plated brass deck mounted type with 1/4 turn lever handles. Spout shall have vacuum breaker and outlet threaded for 3/4″ hose.

C. Acceptable Products (Sinks):

		Utility Sink
1.	Fiat	Util-Tub 15
2.	Swan	MF-1F
3.	Zurn	Z2620-F

D. Acceptable Products (Faucets):

		SK-3 & Sink in Boiler Room
1.	Chicago	895-L5VB
2.	Cambridge	27T3/W/28T8
3.	Zurn	Z812N1
4.	Symmons	S249 Series With vacuum breaker

2.06 COUNTER SINKS

A. Bowl:
1. Shall be minimum of 1.1 millimeter type 302 or 304 nickel bearing stainless steel with radius vertical coved corners and integral faucet deck. Underside shall be fully undercoated. Deck shall have 3 faucet holes on 4″ centers. Drain openings shall be 3-1/2″. Provide hidden compression screwdriver operated fasteners on minimum of 8″ centers around perimeter of sink rim.
2. Sinks SK-1 shall be two bowl 33″ x 22″ x 5″ to 6-1/2″ deep. Depth is Contractors option. Drain connections shall be centered in rear of each bowl.

3. Sinks SK-2 shall be one bowl nominally 17″ side to side x 16″ front to back x 6-1/2″ deep. Bowl shall be 14″ x 10″ x 6″. Provide with three faucet holes. Tail piece shall be off-set type.

B. Trim:
1. Tail piece and P-trap and continuous waste shall be fully removable with slip joints and compression nuts. Material shall be 17 gauge chrome plated cast brass. Size shall be 1-1/2″.
2. Drain baskets shall be chrome plated brass or stainless steel with neoprene stopper, 1-1/2″ connection with other parts all metal.
3. Insulation for SK-1 & 4 trim shall be molded PVC type held in place with nylon draw bands.
4. Supplies and stops shall be chrome plated type with chrome plated flexible connectors, wheel handles, solder inlet and compression female outlet.

C. Faucet shall be deck mounted with 4″ center set, goose neck swivel spout with soft flow aerator. Outlet shall be minimum of 7″ above sink deck and extend minimum of 5″ from center of faucet. Valves shall be quarter turn type and shall be interchangeable with those specified for lavatories. Deck cover shall be gasketed to sink. Handles shall be 4″ paddle type.

D. Acceptable Products (Sinks):

	SK-1	SK-4
1. Elkay	GECTR 33 x 21	LRAD 1716
2. Just	SL-ADA-A	SL-ADA–1617-A-GR

E. Acceptable Products (Faucets):

	SK-1 & 3
1. Chicago	895-317 E36 GN8A
2. Zurn	Z8 12 C3
3. Symmons	S-245 Series

2.07 URINAL

A. Urinals shall be white vitreous china wall hung type with integral trap. It shall have washout flushing action of .50 gallon per flush. Unit shall have top spud flush valve connection. Inside dimension shall be minimum of 12″ x 17″ to 18″ high. Unit shall be manufacturer listed as ADA Compliant. Exposed fasteners shall be chrome plated.

B. Acceptable Products: (Urinal)
1. American Standard Washbrook
2. Kohler Bardon
3. Vortens Verona
4. Zurn Z5750

C. Carriers shall be tubular steel with cast iron or formed steel feet. Carrier plate shall be adjustable constructed of plate steel. Provide bearing plate as required by manufacturer. Match fixture selected.

D. Acceptable Products:
1. Wade W400 Series.
2. Josam 17800 Series.
3. Zurn 1221/1222 Series.

2.08 ELECTRIC WATER COOLER

A. Electric water cooler EWC-1 shall be high-low duplex configuration shall cool eight gallons of 80 degrees F water to 50 degrees F water in one hour. They shall have 120 volt 1/5 Hp hermetic compressor. Water wetted sections shall be lead free. Bubblers shall be chrome plated brass. Refrigerant shall be 134A. Unit shall be certified by the manufacturer to meet ADA. requirements. Controls shall work from front or sides. Top shall be stainless steel. Sides shall be stainless steel, painted or vinyl in the manufacturer's color options as selected by A/E. Furnish cup filler on upper unit.

B. Upper level unit shall have extension “cane” apron.

C. Acceptable Product:

		Double
1.	Elkay	EZSTL8C
2.	Acorn Aqua	A112108F
3.	Haws	HWBFA8L
4.	Halsey Taylor	HAC8FSBL

PART 3 - EXECUTION

3.01 EXAMINATION

A. Verify that walls and floor finishes are prepared and ready for installation of fixtures.

B. Verify that electric power is available and of the correct characteristics.

3.02 PREPARATION

A. Rough-in fixture piping connections in accordance with minimum sizes indicated in fixture rough-in schedule for particular fixtures.

3.03 DEMOLITION

A. For Reuse: (Applies to sink in boiler room.)
1. Shall be inventories before demolition begins. Copies of inventory shall be supplied to the Owner and the Architect/Engineer. Inventory shall include an assessment of the condition.
2. Disconnect water and waste connections.
3. Remove faucets from sinks. Clean outer surface.

3.04 INSTALLATION

A. Install in accordance with manufacturer's instructions.

B. Install each fixture with trap, easily removable for servicing and cleaning.

C. Provide chrome plated flexible supplies to fixtures with stops, reducers, and escutcheons. Mount stops to drop eared elbows screwed to blocking.

D. Coordinate cutting of cabinet tops with cabinet installer supply installer template for making cut.

E. Seal fixtures to wall and floor surfaces with white silicone fungicidal sealant.

F. Tuck backsplash 1/2″ below water cooler deck. Secure with adhesive around exposed perimeter.

G. Provide 2x treated wood blocking or 18 gauge galvanized steel sheet to support, electric water coolers, braces and similar situations, wood blocking shall back hanger and span all contact points. Steel blocking shall span entire back of fixture.

3.05 INTERFACE WITH OTHER PRODUCTS

A. Review shop drawings of museum display and general contracts.

3.06 ADJUSTING

A. Adjust stops or valves for intended water flow rate to fixtures without splashing, noise, or overflow.

3.07 CLEANING

A. At completion clean plumbing fixtures and equipment.

3.08 PROTECTION OF FINISHED WORK

A. Do not permit use of fixtures.

3.09 FIXTURE HEIGHTS

A. Install fixtures to heights above finished floor as indicated.

B. Water-Closet:
1. WC-2 15″ to top of bowl rim.
2. WC-1 18″ to top of seat.
3. Rough-in stop for tank toilets 8″ above finished floor.

C. Urinal:
1. Standard 24″ to top of bowl rim.
2. Accessible 17″ to top of bowl rim.

D. Lavatory:
1. All 34″ to top of basin rim.
2. Rough-in stops 15″ above finished floor.

E. Electric Water Cooler:
1. Lower unit 36″ to center of spout.

F. Water Closet Flush Valves
1. Standard 12″ above bowl rim.

G. Urinal Flush Valves - 44" above finished floor.

3.10 FIXTURE ROUGH-IN SCHEDULE

	HOT WATER	COLD WATER	WASTE	VENT
Lavatory	1/2″	1/2″	1-1/2″	1-1/4″
Utility Sink & Laundry	1/2″	1/2″	3″	1-1/2″
Counter Sinks	1/2″	1/2″	2″	1-1/2″
Electric Water Cooler		1/2″	1-1/2″	1-1/2″
Water Closet (Flush Valve)		1″	4″	2″
Urinal (Flush Valve)		3/4″	2″	1-1/2″

END OF SECTION 224000

SECTION 230529 - SUPPORTS AND ANCHORS FOR HVAC

PART 1 - GENERAL

1.01 WORK INCLUDES

A. Base Bid:
   1. Contractor Provide:
      a. Pipe and equipment hangers and supports for HVAC equipment and gas, refrigerant and condensate piping.
      b. Sleeves and seals, and firestopping for penetrations involving new pipe and duct.
      c. Penetrations required in existing walls, floors and roofs.
      d. Supports for duct.
      e. Concrete pads for furnaces and designated air cooled condensing units/heat pumps.

1.02 RELATED WORK

A. Specified Elsewhere:
   1. 230710 – HVAC Piping and Equipment Insulation.
   2. 230720 – HVAC Ductwork Insulation.
   3. 231123 - Facility Natural Gas Piping/Digester Gas Piping.
   4. 233423 – Fans.
   5. 233100 – Ductwork.
   6. 235400 – Fuel Fired Heaters.
   7. 236200 – Air Cooled Condenser Units.
   8. 237313 – Indoor Air Handing Units.
   9. 238220 – Terminal Heat Transfer Units.

1.03 SYSTEM DEFINITION

A. HVAC piping includes natural gas, refrigeration, and condensate drain piping.

1.04 REFERENCES

A. AISC - American Institute of Steel Construction.

B. ASME B31.2 - Fuel Gas Piping

C. ASME B31.9 - Building Services Piping

D. ASTM F708 - Design and Installation of Rigid Pipe Hangers.

E. ASTM E814 - Fire Stop Sealant.

1.05 SUBMITTALS

A. Submit under provisions of Section 01 33 23.

B. Product Data: Provide manufacturers catalog data including load capacity and firestopping capability. Submit installation techniques to be used for intumescent putty sealants.

1.06 REGULATORY REQUIREMENTS

A. International Mechanical Code 2006 for support of HVAC piping.

1.07 COORDINATION

A. Sleeves:
   1. Coordinate placement with masonry and concrete trades.
   2. Sleeves installed after wall and floor construction are acceptable per this specification.

B. Insulation:
   1. It is not acceptable for piping with cold surfaces not to be insulated through hangers. Provide hangers specified for insulation to pass through or be sealed to

PART 2 - PRODUCTS

2.01 MANUFACTURER & PERFORMANCE

A. Unless otherwise specified the manufacturer’s number specified or scheduled is listed merely as an aid to prospective bidders. In most cases it is an incomplete number and relies upon the written description to fully define the item. Where model numbers define a single manufactured item which does not include the items include in the written description, the model number shall be modified as required to most closely meet the described requirements.

2.02 PIPE HANGERS AND SUPPORTS

A. Acceptable Manufacturers.
   1. B-Line.
   2. Grip Strut.
   3. Fee and Mason.
   4. Grinnel.
   5. Unistrut.

B. Hanger Description:
   1. Side mounted brackets for attachment to wood joist shall be bolt through steel angle or malleable iron bracket equal to B-Line B-3060 or B-3062.
   2. Clamps for attachment to bar joists and beams shall be C-clamps with retaining straps or steel or malleable iron adjustable beam clamps equal to B-Line Figure B-3036 with B-3360 services strap and Figure B-3040.
   3. Strut supports shall be primed 14 or 12 gauge rolled carbon steel with galvanized die-formed accessory clamps and fasteners.
   4. "J-Hooks" for 2" pipe and smaller shall be 1/4" thick by 1-1/4" wide steel rated for 200 lbs each.
   5. Hold down straps shall be die-stamped of galvanized sheet steel or formed of galvanized malleable iron.

C. Copper and Steel HVAC Pipe: Refrigerant and Natural Gas)
   1. Conform to ASME B31.9 and ASTM F708.
   2. Hangers for Pipe Sizes 2″ and under: Carbon steel, adjustable, Clevis.
   3. Multiple or Trapeze Hangers: Steel strut or channels with spacers and hanger rods.
   4. Vertical Support: Steel riser clamp.
   5. Copper Pipe Support: Carbon steel ring, adjustable, copper plated or strut with neoprene inserts. Neoprene inserts shall be full depth of insulation.
   6. Wall Support: "J-Hooks", struts.
   7. Alternative support for insulated pipe shall be strut sized for 4″ long copper sleeve that passes both pipe and insulation.

D. Plastic HVAC Pipe (Condensate Drain Pipe):
   1. Hangers shall be same as noted for steel except on closer centers.

E. Enclosure/Supports:
1. Shall consist of factory molded and extruded fire retard, modular PVC components. Cover shall have factory made inside and outside corner fittings, end caps, and coupling fittings.
2. Mounting clips shall double as pipe supports.
3. Shall have ASME E 84 of 20 or less and smoke developed of 25 or less.
4. Shall be L shaped for ceiling wall corners.
5. Acceptable Products:
DecoShield Pipe Covering System made by:
DecoShield Systems
272 SW 12th Avenue
Deerfield Beach, FL
Phone: 800-873-0894 or 954-725-7665

2.03 ACCESSORIES

A. Hanger Rods: Mild steel continuous threaded national coarse thread.
1. Nuts shall be SAE Grade 3 minimum with cadmium plating and national coarse thread.
2. Lock washers shall be cadmium plated split spring type sized for the rod.

B. Auxiliary Steel and Trapeze Hangers.
1. Shall be Schedule 40 steel pipe or rolled steel shapes complying with AISC manual.
2. Manufactured struts shall be rolled of 12, 14, or 16 gauge material to meet loading required or as noted on Drawings or otherwise specified. It shall have a hot dipped galvanized coating.

C. Acceptable Products.
1. B-Line.
2. Uni-strut.
3. Grip Strut.

2.04 ANCHORS

A. Masonry or concrete type for pipe or equipment supports. Shall be wedge type with either studs or National coarse female thread. Alternative type shall be self drilling expansion type. Anchors shall be U. L. listed.

B. Masonry or concrete type for securing escutcheons to masonry shall be "nail-in" type. Unit shall consist of broad head on hollow zinc alloy core with steel drive pin. Provide with dielectric washer.

2.05 EQUIPMENT CURBS AND PADS

A. Cast-in-place concrete shall be 3500 psi portland cement concrete with 6″ x 6″ welded wire mesh fabric or 3/4″ long nylon fibers mixed at a rate of one pound per cubic yard of concrete. Fibers shall have tensile strength of 130 KSI. Fiber density shall be 34 million fibers per pound.

B. Support Rails shall:
1. Be of welded 18 gauge galvanized steel construction with integral base plate and internal reinforcing.
2. Have 2 x 4 treated wood nailer.
3. Galvanized counter flashing.

C. Curbs shall:
1. Be of straight sided welded galvanized steel construction.
2. Have 1-1/2″ fiberglass insulation.

3. Have 2″ x 2″ treated wood nailer.
4. Be matched to the pitch of the roof steel so sides are plumb.

D. Roof pipe supports shall be loose set type manufactured specifically for use on existing roofs. Unit shall meet the requirements of the roof manufacturer. Construct of recycled rubber or sunlight resistant plastic material and galvanized steel strut. Top shall be flat and at least 2″ wide.

E. Pre-manufactured mounting pads shall be fiber reinforced concrete formed over a high density polystyrene core, or shall be a high density ultraviolet resistant plastic with a minimum web and deck thickness of 3/8″.

F. Acceptable Manufacturers:
1. Pate.
2. Thy.
3. RPS.

2.06 FLASHING

A. Curb flashing shall be as detailed on drawings.

2.07 SLEEVES

A. Sleeves for Pipes Through Walls Rated at less than one hour. 22 gauge galvanized steel.

B. Sleeves for Pipes Through Walls Rated at one hour or greater. Schedule 40 or standard weight galvanized steel pipe.

C. Sleeves for Ductwork: Galvanized steel.

D. Sleeves for pipes through exterior masonry walls. Schedule 40 solid PVC.

2.08 SEALANTS

A. Fire Stopping - Shall comply with UL1479 and ASTM E0814. Shall have an installed F rating of two hours.

B. Fire stopping for metal pipe and conduit shall be tube or trowel applicable and shall remain pliable. Material shall be waterproof or paintable with latex paint.

C. Fire stopping for plastic pipe and insulated pipe and cables shall be intumescent type. It shall be capable of expansion of ten times its original volume when contacted with fire temperatures.

D. Exterior moisture sealant - Shall be non-hardening silicone type rated for temperatures of -40 degrees F to 250 degrees F. Material shall be available in white, gray, brown, and black colors. Material shall be sunlight resistant.

E. Interior sealant shall be silicone type rated for temperatures of 0 degrees F to 250 degrees F. Material shall be available in white, clear, gray, brown or black.

F. Manufacturer

	Fire Stop (Metal)	Fire Stop Plastic	Exterior Sealant	Interior Sealant
1. Tremco	Fyre-shield	Tremstop	Spectrum 2	Spectrum 1
2. 3M	Fire Dam	MPS-21	2000	FS-195

				150	FS-195
3.	General Electric	----	----	SCS1000	SCS1000
4.	Dow Corning	----	----	999A	999A
5.	Hilti	FS601	FS611/635	----	----
6.	Nelson	CLK	CMP	----	----
7.	Rectorseal	Metacaulk 950	Metacaulk 880	----	----

2.09 ESCUTCHEONS

A. For ductwork - Shall be galvanized angle sized to overlap entire opening.

B. For piping - Shall be chrome finished split faced plastic.

C. For multiple pipes or where holes are over large or offset.
1. Utilize pre-painted aluminum sheet fabricated to cover entire hole and seal within 1/4" of the pipe or pipe covering.
2. Holes shall be hole sawed or punched. Holes shall be round.

PART 3 - EXECUTION

3.01 APPLICATION

A. HVAC Pipe:
1. Hanger and support spacing on copper tubing shall be: 5′-0″ maximum for tube 3/4″ and smaller; 8′-0″ maximum for tube 1″ to 1-1/2″; 10′-0″ maximum for tube 2″ and larger.
2. Hanger and support spacing on steel piping shall be: 5′-0″ for 1/2″ and smaller. 8′-0″ maximum for pipe 3/4″ to 1″ and 12′-0″ maximum for pipe over 1-1/4″.
3. PVC vent and intake pipe shall be supported on a maximum of 5′-0″ centers. Vertical pipe shall be restrained from lateral movement in excess of 1/2″.
4. PVC drain piping 1″ diameter and less shall be supported and restrained on 2′-0″ centers. PVC piping 1-1/4″ – 2″ shall be supported on 4′-0″ centers.
5. Gas pipe shall be supported with clevis hangers, supported by rods with beam clamps.

C. Hanger Rod:
1. Hanger rod size shall be: 3/8″ for pipe up to 2″ in size and loads up to 360 lbs; 1/2″ for pipe 2-1/2″ to 3″ and loads up to 600 lbs.

3.02 PREPARATION

A. Coordination of Trades/Owner:
1. Locate sleeves in conjunction with concrete and masonry trades. Determine exact elevation and lateral position.
2. At contractors option core drill openings in floors and core drill or cut in sleeves in walls.

B. Grind or fill concrete substrate with epoxy grout to obtain acceptable substrate.

3.03 ANCHORS

A. Use anchors in concrete or masonry walls and floors.

B. Drill hole clean of loose material. Install anchor, flush with surface. Size hole in accord to manufacturers' recommendation. Physically test anchor by pulling against it. Loose anchors will not be accepted.

3.04 PIPE HANGERS AND SUPPORTS

A. Utilize hangers in accord to Application paragraphs.

B. Install hangers to provide minimum 1/2″ space between finished covering and adjacent work.

C. Place hangers within 12″ of each horizontal elbow.

D. Use hangers with 1-1/2″ minimum vertical adjustment. Provide lock nuts and washers for hanger rod at all hangers. Provide additional lock nut and washer on clevis hanger cross bolts.

E. Support vertical piping such that it cannot be deflected more than 1/8" from center by hand pressure.

F. Where several pipes can be installed in parallel and at same elevation, provide multiple or trapeze hangers.

G. Support riser piping independently of connected horizontal piping.

H. Provide copper plated hangers and supports for copper piping. Provide hard neoprene inserts secured with strut. Insert shall completely cover pipe and match insulation thickness as closely as manufactured standards allow.

I. Locate hangers for pipe movement without disengagement of supported pipe.

J. Provide auxiliary steel to span structure where required. Provide in accord to Paragraph 3.06 below.

K. Secure upper attachment from the top side of wood joists and the top of steel joists, and the top or bottom of steel beams.

L. Do not use perforated hanger strap.

3.05 SLEEVES, SEALS, FIRESTOPPING & ESCUTCHEONS

A. Provide firestopping at all new penetrations between floors except as noted.

B. See Architectural Drawings for the location of walls with a fire resistance rating of one hour or greater or which extend continuously to the roof deck, or which are designated as smoke barriers.

C. Furnace room and elevator walls shall have penetration firestopped as noted below.

D. Size sleeves large enough to allow for movement due to expansion and contraction. Provide for continuous insulation wrapping.

E. Place sleeves in forms at location desired. Locate wall sleeves exactly as desired. If trade installs its own sleeve after masonry work is complete, sleeve shall be mortared tight into wall. Openings installed in concrete floors and walls shall be cored drilled. Caulk sleeves.

F. Where plastic pipe penetrates walls with fire resistance rating of 1 hour or greater or which are designated as a smoke barrier pack annulus with intumscent putty. Size sleeve in accord to intumescent putty manufacturers.

G. Where steel or copper pipe penetrates walls with fire resistance rating of 1 hour or greater or which are designated as a smoke barrier use fire stopping caulk between pipe and sleeve.

H. Exterior wall penetrations shall be sealed with colored silicone between pipe and sleeve. Pack interior of sleeve with fiberglass batt.

I. Provide escutcheon on exposed interior penetrations. Secure escutcheons into place with bead of sealant under. Wipe away exposed sealant.

J. The annular area around duct which penetrates fire rated walls shall be packed tightly with mineral wool and sealed with fire stop caulk, drywall compound or metal escutcheon angles.

K. The annular area around ducts and pipe which penetrate walls which extend continuously to the roof deck but which are un-rated shall be packed tightly with fiberglass batt, or shall be sealed tightly with caulking.

L. Sleeves passing through slab on grade construction shall be terminated at finish floor level. Sleeves penetrating above grade floors shall be terminated 1″ above floor level.

3.06 AUXILIARY STEEL AND EQUIPMENT SUPPORTS

A. Hanging Equipment and Materials:
1. Shall be supported from tops of steel joists, from the top or upper side of wood joists, or from the bottom or top of steel beams.
2. Auxiliary steel shall be manufactured strut, rolled steel shapes or schedule 40 steel piping. Strut shall be sized in accord to the manufacturer's literature unless shown otherwise on Drawings. Rolled shapes or pipe supports shall be in accord to the following chart.

3. Auxiliary Steel Chart (Pipe Diameter and Angle Size)

PIPE SIZE	LOAD POUNDS	30″ SPAN	60″ SPAN	90″ SPAN	120″ SPAN
≤ 3″	≤ 474	1″ 1″x1″x1/4″	1-1/2″ 1-1/2″x1-1/2″x1/4″	2-1/2″ 2″x2″x1/4″	3″ 3″x3″x1/4″

B. Equipment supports shall be as shown on drawings, and specified.

C. Paint supports for equipment and pipe gray.

D. Remove rust, scale and protective coatings before painting. Paint with one coat of primer and two top coats. Apply per manufacturer's instructions.

3.07 EQUIPMENT CURBS AND PADS

A. Concrete pads shall be sized to be a minimum of 6″ larger than the length and width dimensions of equipment.

B. Concrete pads shall be a minimum of 5-1/2″ thick and shall be placed upon compacted drainable fill. Provide 6″ x 6″ wire mesh fabric at mid-level of concrete.

C. Shall be installed by roofing tradesmen in a manner which preserves the warranty of the existing roof. Built-up roofs shall have at least three

roofing felts mopped into the existing roof surface lapping each other by 3″ and the roof by 18″. Provide field installed cants on existing insulation.

D. Cut through existing roofing to deck. Minimize width of cut. Provide rigid perlite insulation fill above flanges. Anchor flanges to roof with drive screws.

E. Make attachments to curbs through counter flashing with stainless steel lug bolts or drive screws.

F. Loose supports shall be installed per roof manufacturers requirements.

END OF SECTION 230529

SECTION 230553 - IDENTIFICATION FOR HVAC PIPE AND EQUIPMENT

PART 1 - GENERAL

1.01 WORK INCLUDES

A. Base Bid:
   1. Contractor Provide:
      a. Pipe stencils and labels.
      b. Valve tags.
      c. Equipment labels.
      d. Control wiring labels.

1.02 RELATED WORK

A. Specified Elsewhere.
   1. 230710 – HVAC Pipe and Equipment Insulation.
   2. 230900 – Temperature Controls.
   3. 231123 – Facility Natural Gas Piping/Digester.
   4. 235400 - Fuel Fired Heaters.
   5. 236200 - Air Cooled Condensing Units.
   6. 237313 – Indoor Air Handling Units.
   7. 238126 – Split System Air Conditioners.

1.03 REFERENCES

A. ANSI B13.1 - Scheme for the Identification of Piping Systems.

1.04 SUBMITTALS

A. Submit under provisions of Sections 013323.

B. Submit list of wording, symbols, letter size, and color coding for HVAC pipe and equipment identification.

C. Product Data: Provide manufacturers catalog literature for each product required.

D. Manufacturer's Installation Instructions: Indicate special procedures, and installation.

PART 2 - PRODUCTS

2.01 MANUFACTURER & PERFORMANCE

A. Unless otherwise specified the manufacturer’s number specified or scheduled is listed merely as an aid to prospective bidders. In most cases it is an incomplete number and relies upon the written description to fully define the item. Where model numbers define a single manufactured item which does not include the items include in the written description, the model number shall be modified as required to most closely meet the described requirements.

2.02 NAMEPLATES

A. Description: Laminated three-layer plastic with engraved black letters on light contrasting background color. Lettering shall be 1/4” tall. Placard size shall accommodate message without abbreviation. Placard shall be rectangular. Multiple lines shall be utilized to minimize length to height ratio. Plastic shall be untraviolet resistant.

2.03 STENCILS

A. Stencils: With clean cut symbols and letters of following size:
   1. 3/4″ to 2″ Outside Diameter of Insulation or Pipe: 8″ long color field, 1/2″ high letters.

B. Stencil Paint: (Shall be latex enamel colors conforming to application noted below.)

2.04 WIRE LABELS

A. Shall be self adhesive strips with single numbers or letters. Strips shall be vinyl and measures a minimum of 1/4" x 1-1/2″.

B. Background shall be yellow or white.

C. Letters shall be nominally 0.10″.

D. Acceptable Manufacturers:
   1. Seton – Wire markers.

2.05 PIPE LABELS

A. Shall have flexible PVC or vinyl backer at either snaps over pipe or is strap-on with draw ties, or glues to itself.

B. Background shall be yellow.

C. Letters shall be nominally 1/2″ for pipe up to 1″ and 3/4″ for outside diameters up to 2-3/8″.

D. Acceptable Manufacturers:
   1. Brady - Bradysnap/strap-on.
   2. EMED - Kwik Coil/wrap-around.
   3. Seton - Setmark/markers-on-a-roll.

2.06 VALVE LABELS

A. Shall be white nylon, metal, or vinyl “write-on” type with draw band attachment in 2″ x 3″ to 3″ x 5″ size.

B. Label shall identify equipment valve serves. Lettering shall be typed or neatly lettered manually with an indelible black pen. Do not assign tags numbers and furnish a key.

C. Acceptable Products:
   1. Emedco Jumbo Tag Seal
   2. Brady 65000 Series
   3. Seton Write on Tag

2.07 BURIED PIPE RIBBON

A. Warning ribbons shall be 6″ wide x3.5 mil polyethylene in APWA color.

B. Acceptable Products:
   1. Brady Identoline.
   2. Emed Underground Warning Tape.
   3. Seton Underground Warning Tape.

PART 3 - EXECUTION

3.01 PREPARATION

A. Sand or steel wool ferrous pipe smooth removing factory applied lacquer coatings. Wipe free of dust.

B. Painted, paper or rubber surfaces shall be wiped clean. Use solvent as recommended by insulation manufacturer where it applies.

C. Clean wire ends free of lubricants and dirt.

3.02 INSTALLATION

A. Install plastic nameplates with corrosive-resistant mechanical fasteners.

B. Identify HVAC equipment with plastic nameplates. Use names shown on Drawings.

C. Identify valves in equipment rooms which are remote from the spaces and devices they control. Use names as determined by the Owner or as otherwise specified.

D. Tag automatic controls, instruments, and relays. Key to control schematic.

E. Identify piping, concealed or exposed, with stenciled painting or pipe labels. Use names shown on Drawings. Install in clear view and align with axis of piping. Locate identification on each side of wall penetrations and near each equipment take off. Locate on minimum of 50’-0” centers on straight runs without branches and take-offs.

F. Identify cabling, concealed or exposed, with markers. Use plan English names like “HP#1”.

G. Identify refrigerant pipe in common trenches and conduit with write-on valve labels.

3.03 APPLICATION

A. Fans, Furnaces, Heat Pumps, Fan Coil Units:
   1. Label furnaces, air handling units and heat pumps with engraved tag.
   2. Label inside panel surfaces of fan coil units with an indelible ink pen using ¾” letters.

B. Valves:
   1. Tag remote valves. Valves within sight of controlled item do not require a tag.

C. Pipe:
   1. Label pipe supported along side other pipe in exposed spaces. Label pipe on a minimum of 50'-0" centers and on both sides of walls.

D. Wire Labels:
   1. Label thermostats, carbon dioxide sensors and humidistats with name of heat pump, furnace, fan coil, or air handling unit served. Use an indelible fine point pen and label inside surface of instrument covers and baseplates.

END OF SECTION 230553

SECTION 230593 - TESTING ADJUSTING & BALANCING FOR HVAC

PART 1 - GENERAL

1.01 WORK INCLUDES

A. Base Bid:
1. Contractor Provide:
   a. Test and balance new supply, return and exhaust systems shown on drawings.
   b. Test and balance new fans, furnaces and air handling units serving exhaust, return and supply systems.
   c. Provide pretest evaluation systems shown as new on drawings. List questions for A/E which may be required before balance work can be completed.
   d. Provide retesting required in Paragraph 1.04.D.
   e. Obtain temperature measurements across heating and cooling apparatus once for heating season and once for cooling season.
   f. Balance outside air dampers to minimums noted on Drawing Schedule.
   g. Do work at peak heating and peak cooling seasons.
   h. Measure inlet and outlet air temperature and running load amperes of each heat pump unit.

1.02 RELATED WORK

A. Specified Elsewhere:
1. 230900 - Temperature Controls.
2. 233100 - Ductwork.
3. 233300 – Air Duct Accessories.
4. 233400 - Fans.
5. 233713 – Diffusers, Registers and Grilles.
6. 235400 - Fuel Fired Heaters.
7. 236200 - Air Cooled Condensing Units.
8. 238126 - Split System Air Conditioners.
9. 237313 – Indoor Air Handling Units.

1.03 SYSTEM DESCRIPTION

A. Intent of work is to:
1. Balance flow distribution so that space temperatures are homogeneous.
2. Verify duct does not leak and that fans and equipment are functioning per design and manufacturer’s performance data.
3. Verify ventilation and exhaust flows are as specified.
4. Leave the Owner with a functioning system.

B. Definitions:
1. Air balance - testing and adjusting air system components to achieve design parameters or to evenly distribute available air. Includes both flow and temperature measurements recording of measurements, and adjustment of system to achieve specified air flows.
2. Calibration - Comparison of the measured values of an instrument with a known quantity.
3. Testing - measurement of temperatures, gas flow, electric current and voltage which show how much work an air conditioner is doing or how much heat a furnace is providing.

1.04 QUALITY ASSURANCE

A. Firm shall have personnel certified in accord to one of the standards referenced under REGULATORY REQUIREMENTS or shall be a registered professional Engineer experienced with this type of work.

B. Personnel doing work on site shall have certifications noted above.

C. Instrumentation used for testing and balancing shall be calibrated no more than one month before date of use.

D. Owner and Architect/Engineer reserve the right to pick ten different measurements to be remade after the test and balance report is submitted. If five of the ten selected measurements are found to be more than 50 percent different than those submitted in the report the entire balance report shall be redone.

E. The A/E will compare measured fan characteristics against the manufacturer’s published fan curves and tabulated data. Test data which falls outside of the manufacturer’s published curves may require retesting subject the A/E review.

1.05 REGULATORY REQUIREMENTS AND STANDARDS

A. AABC - National Standards for Total System Balance.

B. ADC - Test Code for Grilles, Registers, and Diffusers.

C. ASHRAE 111 - Practices for Measurement, Testing, Adjusting, and Balancing of Building Heating, Ventilation, Air-conditioning, and Refrigeration Systems.

D. NEBB - Procedural Standards for Testing, Adjusting, and Balancing of Environmental Systems.

E. SMACNA - HVAC Systems Testing, Adjusting, and Balancing.

F. SMARTA - Sheet Metal, Air Conditioning and Roofing Contractors Trade Association of Illinois.

G. TABIC - Testing and Balancing Institute for Certification.

1.06 SUBMITTALS

A. Submit name and qualification certificate of air balance technician who actually does work. Do this at least ten working days before work is to be done.

B. Test Reports: Indicate data on standardized form following AABC. SMACNA, SMARTA or TABIC.

C. Provide written certification from installing contractors systems are in correct working condition and ready for test.

D. Field Reports: Indicate deficiencies in systems that would prevent proper testing, adjusting, and balancing of systems and equipment to achieve specified performance.

E. Prior to commencing work, submit report forms or outlines indicating adjusting, balancing, and equipment data required.

F. Submit draft copies of report for review prior to final acceptance of Project. Provide final copies for A/E and for inclusion in operating and maintenance manuals.

G. Submit cost of balance work as line item on contractors schedule of values. Provide name of balance contractor that time.

H. Provide reports in soft cover, letter size, three-hole binder manuals, complete with index page, with cover identification at front and side.

I. Include detailed procedures, agenda, sample report forms prior to commencing system balance.

1.07 PROJECT CONDITIONS

A. Building/Construction Conditions:
1. All portions of systems shall be complete before balance work is begun. Ceilings shall be in place. Grilles and diffusers shall be in place.

B. Ambient Conditions:
1. Temperature measurements across furnace heat exchangers shall be made when ambient temperatures are 50 degrees F or less.
2. Temperature measurements across cooling coils shall be made when ambient temperatures are 75 degrees F or greater.
3. Balance work which does not involve heating or cooling apparatus shall be accomplished when ambient temperatures are above 20 degrees F and less than 80 degrees F.

1.08 SEQUENCING

A. Do not do work until systems are complete.

B. Work with temperature installer to balance devices under all operational sequences.

C. Where systems are completed early for partial Owner occupancy, complete the balance report for those areas at the time the systems are turned over for Owner use.

PART 2 - PRODUCTS

2.01 MANUFACTURER & PERFORMANCE

A. Not Used.

PART 3 - EXECUTION

3.01 EXAMINATION

A. Verify that systems are complete and operable before commencing work. Ensure the following conditions:
1. Systems are started and operating in a safe and normal condition.
2. Temperature control systems are installed complete and operable.
3. Proper thermal overload protection is in place for electrical equipment.
4. Final filters are clean and in place.
5. Duct systems are clean of debris.
6. Fans are rotating correctly.
7. Fire and volume dampers are in place and open.
8. Air coil fins are cleaned and combed.

9. Access doors are closed and duct end caps are in place.
10. Air outlets are installed and connected.
11. Duct system leakage is minimized.

B. Submit field reports immediately by telephone, email or facsimile. Report defects and deficiencies noted during performance of services which prevent system balance. Do not report defects and deficiencies in written reports except as preliminary situations for which remedies were found.

C. Beginning of work means acceptance of existing conditions.

3.02 PREPARATION

A. Provide instruments required for testing, adjusting, and balancing operations. Make instruments available to Architect/Engineer to facilitate spot checks during testing.

B. Provide additional balancing devices as required.

3.03 FIELD QUALITY CONTROL

A. Air Handling Systems: Adjust to within plus or minus five (5) percent of design for supply systems and plus or minus five percent of design for return and exhaust systems.

B. Air Outlets and Inlets: Adjust outlets and inlets in space to within plus or minus three percent of design.

3.04 ADJUSTING

A. Ensure recorded data represents actual measured or observed conditions.

B. Permanently mark settings of dampers, valves, and other adjustment devices allowing settings to be restored.

C. After adjustment, take measurements to verify balance has not been disrupted or that such disruption has been rectified.

D. Leave systems in proper working order, replacing covers, closing access doors, closing doors to electrical switch boxes, and restoring thermostats to specified settings.

E. At final inspection, recheck random selections of data recorded in report. Recheck points or areas as selected and witnessed by the Owner.

3.05 AIR SYSTEM PROCEDURE

A. Adjust air handling and distribution systems to provide required or design supply, return, and exhaust air quantities.

B. Measure air quantities at air inlets and outlets, with calibrated flow hood. Do not use velocity traverse of duct without approval of the A/E.

C. Adjust distribution system to obtain uniform space temperatures free from objectionable drafts and noise.

D. Use volume control devices to regulate air quantities only to extend that adjustments do not create objectionable air motion or sound levels. Effect volume control by duct internal devices such as dampers and splitters. Do not use register dampers for adjustment without permission from the A/E. Under slab outlets shall be balanced with register dampers.

E. Vary total system air quantities by adjustment of fan speeds. Provide drive changes required. Vary branch air quantities by damper regulation.

F. Measure static air pressure conditions on air supply units, furnaces, and energy recovery units including filter and coil pressure drops, and total pressure across the fan. Make allowances for loading of filters.

G. Adjust outside air automatic dampers, outside air, return air, and exhaust dampers for design conditions. See Schedule on Drawings.

H. Measure temperature conditions across outside air, return air, and exhaust dampers to check leakage.

3.06 TESTING AND BALANCING

A. Motors 1/3 Horsepower and Larger:
   1. Check and record full load amperes.
   2. Report any motors which are overloaded, defective, or operating within their service safety factor.

B. At Fans: (Be they in air supply units, furnaces or not).
   1. Measure:
      a. Air flow.
      b. Total static pressure.
      c. RPM.

C. Heat Pumps:
   1. Measure for both cooling and heating modes.
      a. Compressor and fan current draw.
      b. Ambient temperature intake.
      c. Discharge air temperature.

D. All work for related equipment shall be done on the same day and time.

3.08 REPORTS

A. Report forms:
   1. Title Page:
      a. Project name and location.
      b. Name of test and balance technician.
      c. Report date.
   2. Summary Comments:
      a. Final performance.
      b. Notable characteristics of system.
      c. Nomenclature used throughout report.
      d. Test conditions.
   3. Instrument List:
      a. Instrument.
      b. Manufacturer.
      c. Model number.
      d. Serial number.
      e. Range.
      f. Calibration date.
   4. Electric Motors:
      a. Manufacturer.
      b. Model/Frame.
      c. HP/BHP.
      d. Phase, voltage, current, both nameplate and actual.
      e. RPM.
      f. Service factor.

g. Starter size, rating, heater elements.
h. Sheave Make/Size/Bore.

5. V-Belt Drive:
   a. Identification/location.
   b. Required driven RPM.
   c. Driven sheave, diameter and RPM.
   d. Belt, size and quantity.
   e. Motor sheave diameter and RPM.
   f. Center to center distance, maximum, minimum, and actual.
6. Air Moving Equipment:
   a. Location.
   b. Manufacturer.
   c. Unit number.
   d. Air flow, specified and actual.
   e. Outside air flow, specified and actual.
   f. Total static pressure across fan.
   g. Total external static pressure across air handling unit and/or furnace including coils.
   h. Airside static pressure drop across coils.
   i. Sheave Make/Size/Bore.
   j. Number of Belts/Make/Size.
   k. Fan RPM.
   l. Current Loading (AMPS) of Motor.
7. Exhaust Fan Data:
   a. Location.
   b. Manufacturer.
   c. Unit number.
   d. Air flow, specified and actual.
   e. Total static pressure specified and actual.
   f. Sheave Make/Size/Bore.
   g. Number of Belts/Make/Size.
   h. Fan RPM.
   i. Current loading of motor.

8. Furnaces:
   a. Unit number and use.
   b. Name plate gas input rate.
   c. Name plate output rate.
   d. Total temperature difference across furnace.
   e. Manufacturer's stated efficiency.
   f. Air flow through furnace.
   g. Calculation of furnace output.

9. ACCUS (Heat Pumps):
   a. Unit number and use.
   b. Ambient inlet temperature.
   c. Discharge temperature.
   d. Voltage and electric current.
   e. Calculation of cooling capacity.
   f. Suction temperature of fully loaded unit.
   g. Comparison with manufacturer's rating.

END OF SECTION 230593

SECTION 230720 - HVAC DUCTWORK INSULATION

PART 1 - GENERAL

1.01 WORK INCLUDES

A. Base Bid:
   1. Contractor Provide:
      a. Insulation on all sheet metal ducts in cold attic spaces.
      b. Insulation on exhaust discharge duct downstream from fans.
      c. Insulation on round sheet supply duct in warm ceiling spaces.

B. Alternate Bid No. 5.
   1. Insulation on exhaust discharge duct downstream from fans.
   2. Insulation on round sheet metal supply duct in cold attics and in warm ceiling spaces.

1.02 RELATED WORK

A. Specified Elsewhere:
   1. 233100 - Ductwork.

1.03 SYSTEM DESCRIPTION

A. Definitions:
   1. Supply air ductwork is all duct which is downstream of heating or cooling coils.
   2. Outside air ductwork is all duct which connects louvers to the intake side of equipment or mixing boxes or plenums.
   3. Mixed air duct is that duct downstream of mixing, “economizer” dampers and the intake of cooling units.
   4. Cold attic – uninsulated and unheated space just under roof structure of upper floors and porch.
   5. Warm ceiling spaces are those spaces located between the warm floor of an upper space and the warm ceiling of the space below.

B. Description of work:
   1. Work includes insulation of new duct.

1.04 QUALITY ASSURANCE

A. Materials shall be stamped with ASTM and UL listings.

B. Inspect to be certain tolerance are met. A/E will verify. If tolerance are not found to be met at any one part of the system the entire system shall be re-inspected.

C. Installer: Workman skilled in performing the work of this section.

1.05 REGULATORY REQUIREMENTS

A. ASTM C518 - Steady-State Heat Flux Measurements and Thermal Transmission Properties by Means of the Heat Flow Meter Apparatus.

B. ASTM C553 - Mineral Fiber Blanket and Felt Insulation.

C. ASTM C612 - Mineral Fiber Block and Board Thermal Insulation.

D. ASTM E84 - Surface Burning Characteristics of Building Materials.

E. ASTM E96 - Water Vapor Transmission of Materials.

1.06 SUBMITTALS

A. Submit under provisions of Section 013323.

B. Product Data: Provide product description, list of materials and thickness for each service, and locations. Show compliance to referenced standards. Show K-Value, density, permeability flame spread, and surface burning characteristics. Provide MSDS data on all adhesives and cleaners. Show accessories will match insulation.

C. Provide a separate line item and cost on the Schedule of Values. Provide insulating contractor's name.

1.07 DELIVERY, STORAGE, AND HANDLING

A. See Section 016600.

B. Deliver materials to site in original factory packaging, labeled with manufacturer's density and thickness. Keep materials separated until installed or removed from site.

C. Store insulation in original wrapping and protect from weather and construction traffic.

D. Protect insulation against dirt, water, chemical, and mechanical damage.

PART 2 - PRODUCTS

2.01 MANUFACTURER & PERFORMANCE

A. Unless otherwise specified the manufacturer’s number specified or scheduled is listed merely as an aid to prospective bidders. In most cases it is an incomplete number and relies upon the written description to fully define the item. Where model numbers define a single manufactured item which does not include the items include in the written description, the model number shall be modified as required to most closely meet the described requirements.

2.02 GLASS FIBER

A. Composite Surface Burning Characteristics by UL 723:
1. Flame Spread - 25.
2. Smoke Developed - 50.

B. Flexible Insulation: flexible, non-combustible blanket:
1. K value: ASTM C518, .27 at 75 degrees F.
2. Maximum service temperature: 250 degrees F.
3. Maximum moisture absorption: less than three percent by volume.
4. Kraft paper reinforced vapor barrier jacket with glass fiber yarn bonded to aluminized film. Limit moisture vapor transmission to .04 permeability.
5. Density 1.0 lb./cubic foot.

C. Vapor Barrier Tape:
1. Compatible with wrap submitted.
2. Premium grade foil fiberglass scrim and kraft paper laminate in diamond pattern with high tack adhesive. Shall be able to conform to irregular surfaces. Backing shall conform to UL Standard 723.

PART 3 - EXECUTION

3.01 ENVIRONMENTAL REQUIREMENTS

A. Maintain ambient temperatures and conditions required by manufacturers of adhesives, mastics, and insulation cements.

B. Maintain ambient temperature limits during and after installation for minimum period of two hours.

3.02 PREPARATION

A. Remove construction dirt and dust from duct to be insulated before insulation work is done.

B. Verify duct has been sealed and leak tested. If joints are not painted with sealant then duct has not been sealed.

3.03 INSTALLATION

A. Install materials in accordance with manufacturer's instructions.

B. Insulated ductwork conveying air below ambient temperature: (Exhaust discharge duct and round supply duct).
   1. Provide insulation with vapor barrier jackets.
   2. Finish with vapor barrier tape of the highest quality specified.
   3. Continue insulation through walls, sleeves, hangers, and other duct penetrations.
   4. Insulate entire system including fittings, joints, flanges, and flexible connections.
   5. Continue attic duct covering through sleeves, into conditioned spaces.

C. Blanket insulation shall be wrapped tightly around circumference of ductwork. Edges shall be lapped and stapled. Circumferential joints shall be taped.

3.04 APPLICATION

	DUCTWORK	THICKNESS Inch	FINISH
A.	Diffuser backs	1-1/2″ Flexible	Vapor Barrier Specified
B.	Outside air and mixed air duct	1-1/2" Flexible	Vapor Barrier Specified
C.	Concealed round supply duct above ceilings	1-1/2″ Blanket	Vapor Barrier Specified
D.	All sheet metal duct exposed in Attic spaces	2″ Flexible	Vapor Barrier Specified
E.	Furnace vent pipe in unheated attics	½″ fiberglass pipe insulation	None Required

END OF SECTION 230720

SECTION 230800 - COMMISSIONING OF HVAC

PART 1 - GENERAL

1.1 SUMMARY

A. Work Includes:
   1. Contractor shall:
      a. Commission and start each piece of equipment.
      b. Verify gas flow rates for each furnace them one at a time and clocking them. Coordinate with Test & Balance.
      c. Deliver manufacturer's executed startup checklists to the Architect/Engineer and Owner.

B. Related Sections:
   1. 230593 - Testing Adjusting & Balancing For HVAC.
   2. 230900 - Temperature Controls.
   3. 233423 - Fans.
   4. 235400 - Fuel Fire Heater.
   5. 236200 - Air Cooled Condensing Units.
   6. 237313 – Indoor Air Handling Units.
   7. 238126 – Split System Air Conditioners.

1.2 DEFINITIONS

A. Commissioning Plan: A document that outlines the organization, schedule, allocation of resources, and documentation requirements of the commissioning process.

B. HVAC&R: Heating, Ventilating, Air Conditioning, and Refrigeration.

C. Systems, Subsystems, Equipment, and Components: Where these terms are used together or separately, they shall mean "as-built" systems, subsystems, equipment, and components.

1.3 INFORMATIONAL SUBMITTALS

A. Certificates of readiness.

B. Certificates of completion of installation, prestart, and startup activities.

1.4 ALLOWANCES

A. See individual sections.

1.5 CONTRACTOR'S RESPONSIBILITIES

A. Perform commissioning tests at the direction of the Architect/Engineer.

B. Attend construction phase controls coordination meeting.

C. Attend testing, adjusting, and balancing review and coordination meeting.

D. Participate in HVAC&R systems, assemblies, equipment, and component maintenance orientation and inspection as directed by the Architect/Engineer.

E. Provide information requested by the Architect/Engineer for final commissioning documentation.

F. Provide measuring instruments and logging devices to record test data, and provide data acquisition equipment to record data for the complete range of testing for the required test period.

1.6 ARCHITECT/ENGINEER RESPONSIBILITIES

A. Review Project-specific construction checklists and commissioning process test procedures for actual HVAC&R systems, assemblies, equipment, and components to be furnished and installed as part of the construction contract.

B. Observe commissioning testing.

C. Verify testing, adjusting, and balancing of Work are complete.

1.7 COMMISSIONING DOCUMENTATION

A. Provide the following information to the Architect/Engineer for inclusion in the commissioning plan:
1. Identification of installed systems, assemblies, equipment, and components including design changes that occurred during the construction phase.
2. Process and schedule for completing construction checklists and manufacturer's prestart and startup checklists for HVAC&R systems, assemblies, equipment, and components to be verified and tested.
3. Certificate of readiness, signed by the Contractor, certifying that HVAC&R systems, assemblies, equipment, components, and associated controls are ready for testing.
4. Certificate of completion certifying that installation, prestart checks, and startup procedures have been completed.
5. Certificate of readiness certifying that HVAC&R systems, subsystems, equipment, and associated controls are ready for testing.
6. Test and inspection reports and certificates.
7. Corrective action documents.
8. Verification of testing, adjusting, and balancing reports.

1.8 CONSTRUCTION SEQUENCING

A. Equipment serving different phases of construction shall be commissioned just after startup.

B. Confirmation of proper equipment operation shall be confirmed within three days of commission operation.

PART 2 - PRODUCTS (Not Used)

PART 3 - EXECUTION

3.1 TESTING PREPARATION

A. Certify that HVAC&R systems, subsystems, and equipment have been installed, calibrated, and started and are operating according to the Contract Documents.

B. Certify that HVAC&R instrumentation and control systems have been completed and calibrated, that they are operating according to the Contract Documents, and that pretest set points have been recorded.

C. Certify that testing, adjusting, and balancing procedures have been completed and that testing, adjusting, and balancing reports have been submitted, discrepancies corrected, and corrective work approved.

D. Set systems, subsystems, and equipment into operating mode to be tested (e.g., normal shutdown, normal auto position, normal manual position, unoccupied cycle, emergency power, and alarm conditions).

E. Inspect and verify the position of each device and interlock identified on checklists.

F. Check safety cutouts, alarms, and interlocks with life-safety systems during each mode of operation.

G. Testing Instrumentation: Install measuring instruments and logging devices to record test data as directed by the Architect/Engineer.

3.2 Testing AND BALANCING VERIFICATION

A. Prior to performance of testing and balancing Work, provide copies of reports, sample forms, checklists, and certificates to the Architect/Engineer.

B. Notify the Architect/Engineer at least ten days in advance of testing and balancing Work, and provide access for the Architect/Engineer to witness testing and balancing Work.

3.3 GENERAL TESTING REQUIREMENTS

A. Provide technicians, instrumentation, and tools to perform commissioning test at the direction of the Architect/Engineer.

B. Scope of HVAC&R testing shall include entire HVAC&R installation, from central equipment for heat generation and refrigeration through distribution systems to each conditioned space. Testing shall include measuring capacities and effectiveness of operational and control functions.

C. Test all operating modes, interlocks, control responses, and responses to abnormal or emergency conditions, and verify proper response of building automation system controllers and sensors.

D. The Architect/Engineer shall review testing plans, procedures, and checklists for HVAC&R systems, subsystems, and equipment.

E. Tests will be performed using conditions approximating design conditions.

F. Simulated conditions may need to be imposed using an artificial load when it is not practical to test under design conditions. Before simulating conditions, calibrate testing instruments. Provide equipment to simulate loads. Set simulated conditions as directed by the Architect/Engineer and document simulated conditions and methods of simulation. After tests, return settings to normal operating conditions.

G. The Architect/Engineer may direct that set points be altered when simulating conditions is not practical.

H. If tests cannot be completed because of a deficiency outside the scope of the HVAC&R system, document the deficiency and report it to the Owner. After deficiencies are resolved, reschedule tests.

I. If the testing plan indicates specific seasonal testing, complete appropriate initial performance tests and documentation and schedule seasonal tests.

3.4 HVAC & R systems, subsystems, and equipment Testing Procedures

A. HVAC&R Instrumentation and Control System Testing: Field testing plans and testing requirements are specified in Section 230900.

B. Energy Supply System Testing: Use utility meter to measure gas flow.

C. Refrigeration System Testing: See Testing and Balancing.

D. HVAC&R Distribution System Testing: See Testing and Balancing.

END OF SECTION 230800

SECTION 230900 - TEMPERATURE CONTROLS

PART 1 - GENERAL

1.01 WORK INCLUDES

A. Base Bid:
   1. Contractor Provide:
      a. Installation and programming of factory finished controls for heat pump/furnaces, heat pump/fan/blower (air handling unit) coils, ductless split system and outdoor heat pump units.
      b. Miscellaneous assorted control connections and wiring and devices to make system function.
      c. All wire conduit tubing and cable required to complete systems.
      d. Removal of existing controls.
      e. Commissioning and startup of control systems and the equipment they control for both heating and cooling systems.
      f. Control of main toilet room exhaust fans.
      g. Control of “economizer” dampers furnished as mixing boxes.
      h. Covers over all thermostats, humidistats and CO2 sensors.

1.02 RELATED WORK

A. Specified Elsewhere:
   1. 230593 - Testing, Adjusting Balancing for HVAC.
   2. 230800 - Commissioning of HVAC Systems.
   3. 233423 - Fans.
   4. 235400 - Fuel Fired Heaters.
   5. 236200 – Air Cooled Condensing Units.
   6. 237313 - Indoor Air Handling Units.
   7. 238126 - Split System Air Conditioners.

1.03 REFERENCES

A. ANSI/NEMA 250 - Enclosures for Electrical Equipment (1000 Volts Maximum).

B. ANSI/NFPA 90A - Installation of Air Conditioning and Ventilation Systems.

1.04 SYSTEM DESCRIPTION

A. Definition:
   1. Temperature Control – Temperature Control Subcontractor.

B. It is the intention of this specification all controls systems shall work. They shall be provided with all necessary devices, programming and labor required to provide the specified “Sequence of Operation”.

1.05 SUBMITTALS

A. Submit under provisions of Section 013323.

B. Shop Drawings: Indicate complete operating data, system drawings, wiring diagrams, and written detailed operational description of sequences. For automatic dampers indicate arrangement, velocities, and static pressure drops for each system.

C. Product Data: Include description and engineering data for each control system component. Include sizing as requested.

D. Schedule of Values:

1. Shall list the name of the business entity whose employees actually perform the work listed in this section.
2. Separate line items with applicable costs shall be listed for each of the following:
   a. Submission of shop drawings and product data.
   b. Software programming labor/programming of package thermostat controls.
   c. Material and equipment costs.
   d. Installation labor of materials and equipment.
   e. Startup/commissioning of control systems.
   f. Training of Owner's personnel and preparation of training materials and maintenance manuals.

1.06 PROJECT RECORD DOCUMENTS

A. Submit record documents under provisions of Section 017839.

B. Accurately record actual location of control components, including safety devices, thermostats, and sensors.

C. Revise shop drawings to reflect actual installation and operating sequences.

1.07 OPERATION AND MAINTENANCE DATA

A. Submit operation and maintenance data under provisions of Section 017823.

B. Include systems descriptions, set points, and controls settings and adjustments.

C. Include inspection period, cleaning methods, recommended cleaning materials, and calibration tolerances.

D. Format and Content:
1. The manual shall include data for only those controllers and systems actually installed. Manufacturer's standard publications shall be highlighted to reflect the system actually used and edited to delete the systems, controllers and equipment not actually used. A cover sheet or sheets which define the correct equipment is acceptable but does not fill the requirements noted above for editing and highlighting.
2. The manual shall be 8-1/2" x 11" paper size, or shall be bound into an 8-1/2" x 11" folder.
3. There shall be a separate section for each type of equipment. Equipment names used for the work shall be noted on maintenance manuals.

1.08 OWNER INSTRUCTION AND COMMISIONING

A. System Operation:
1. Controls and equipment which is controlled shall be fully operational and tested by the respective trades which installed the devices. Corrective work shall be performed. Contractor shall review work of all related trades. Work like “bumping” motors, energizing controls, opening valves to determine if systems will function shall be completed. Notify equipment installers of non-functioning items. This shall be done prior to substantial completion.
2. Contractor shall list schedule items required from the Owner so that programming can be completed. Allow a minimum of one week for the Owner to provide this schedule.

3. Obtain from the Owner a list of those individuals who are authorized to provide schedules to the contractor and to receive instructions regarding system operation.

B. Owner Instruction:
1. Instruction shall be provided once on the substantial completion of all work and once before final completion.
2. Provide a sign up sheet for all personnel who attend each training session.
3. Notify the Owner at least two weeks before instructional sessions are needed. Coordinate instructional time at Owner's convenience during normal workday.
4. Simply telling whom ever of the Owner's personnel who may be on site when the hardware installation is complete does not meet this specification.

C. Training Material:
1. Shall include description of each operating mode of the system.
2. Shall include a glossary of terms which are particular to the project and operation of the systems.
3. Shall include troubleshooting potential problems.
4. Shall utilize the same identification symbols as actually installed.
5. Shall include instruction in reading control shop drawings.
6. Shall cover routine maintenance. Provide separate reproducible check lists for daily, weekly, monthly and yearly maintenance.
7. Include name and telephone number of trained individual who will answer questions on the project.

D. Training Medium:
1. Provide instruction in written form. Supply at least two copies for use by the Owner. Add to this the number of copies needed for the Contractor.
2. The booklet shall be made in the English Language.

E. Obtain a signed attendance sheet for each training session. Turn a copy of these sheets over to the A/E and the Owner.

1.09 QUALIFICATIONS

A. Installing Contractor:
1. Shall have local service capability which can service a control problem within two hours of being called by the Owner.
2. Shall have the "In-House" capability of programming controllers/thermostats installed.

1.10 SEQUENCING AND SCHEDULING

A. Sequence work to ensure installation of components is complementary to installation of similar components in other systems.

B. Coordinate work and ensure system is completed and commissioned by Date of Substantial Completion for each phase of the work.

C. Coordinate installation of system components with installation of mechanical systems equipment such as air handling units and furnaces.

1.11 WARRANTY

A. Provide one year warranty for all parts and labor beginning with the Date of Substantial Completion of each phase of work.

1.12 COORDINATION

A. Temperature control system protocol shall be carefully coordinated with that provided by terminal heating/cooling unit manufacturers. This is not a directive for terminal heating/cooling units to be furnished by the controls contractor.

B. Coordinate training and informational needs directly with Owner. Confirm all personal and telephone conversations held with Owner in writing. Provide copies of all communications to the General Contractor and the Architect/Engineer.

PART 2 - PRODUCTS

2.01 MANUFACTURER & PERFORMANCE

A. Unless otherwise specified the manufacturer's number specified or scheduled is listed merely as an aid to prospective bidders. In most cases it is an incomplete number and relies upon the written description to fully define the item. Where model numbers define a single manufactured item which does not include the items include in the written description, the model number shall be modified as required to most closely meet the described requirements.

2.02 CONTROLLERS – See Section 235400

2.03 RELAYS

A. Shall have DPDT horse power rated contacts at 120 volts. Provide with a 24 volt coil and a NEMA 1 enclosure.

2.04 GUARDS AND COVERS

A. Plastic transparent covers shall have fully removable clear covers and an opaque backer plate. Key shall be GE 75 type.

B. Acceptable Products: Plastic
   1. Honeywell TGF1 Series.
   2. White Rogers F-29 Series

2.05 SEQUENCE OF OPERATION

A. Ductless Split System Heat Pumps:
   1. Shall operate when space served is calling for cooling and other spaces served by RTU are calling for heating.
   2. Shall operate when space is calling for heating.
   3. Fan shall operate intermittently as required.
   4. Shall operate on schedule designated by the Owner.

B. Furnaces and Fan/Blower Coil Units:
   1. Supply Fan Operation:
      a. Energize in morning when space work activity begins.
      b. De-energize in evening when space work activity stops.
      c. Cycle as required to maintain minimum and maximum space temperatures.
      d. Vary speed of fan to accommodate cooling and heating loads.
   2. Exhaust Fans:
      a. Main toilet exhaust fans shall be energized per User's schedule.
   3. Mixing Box Dampers shall:
      a. Be modulated to provide space cooling when outdoor temperatures will allow. (Free-Cooling.)

b. Be returned to a return only position during periods when the space is not occupied.
c. Shall index outside air dampers open when room CO_2 exceeds 900 parts per million.
d. Relief dampers shall modulate open as outside air dampers modulate beyond minimum positions.

4. Heating:
a. Shall utilize heat pump capacity to limits noted in equipment specifications.
b. At lower ambient temperatures gas furnaces shall be operated as required. Heat pump only units shall be operated down to point where “defrost” of any type is not required.
c. All fans whether in a furnace, fan coil or air handling unit serving any one space shall operate on a call for heat or cooling. All of this shall be done by setting schedules and set-points at the same.

5. Mechanical Cooling:
a. Shall be locked out when outdoor temperatures are below 55 degrees F.
b. Shall maintain space cooling temperature at 75 degrees F during occupied periods and 85 degrees F during unoccupied periods.
c. Shall provide initiation of compressor condensing units staging control.
d. Shall maintain space humidity levels at no more than 55 percent relative humidity.
e. Relief damper in high ceiling not attached to duct shall modulate open with Furnace No.1 and Furnace No.4.

PART 3 - EXECUTION

3.01 EXAMINATION

A. Verify that systems are ready to receive work.

B. Beginning of installation means installer accepts existing conditions.

3.02 DEMOLITION

A. For Disposal:
1. Remove existing control instruments and instrument air compressor and air dryer. Dispose of in a lawful manner.
2. Remove tubing, wire and conduit where exposed within space. Abandon conduit, tubing and wire left in walls that are not otherwise demolished.
3. Disconnect wire at control source and pull from conduits.

3.03 INSTALLATION

A. Install in accordance with manufacturer's instructions.

B. Run exposed only in mechanical rooms, storage rooms and like, in neat manner supported from piping or conduit or structure.

C. Mount thermostats with pads and operable levers, dials and buttons no lower than 50" and no higher than 54".

D. Mount outdoor sensors indoors, with sensing elements outdoors with sun shield.

E. Provide junction boxes for wire connections. Provide conduit in walls and inaccessible ceiling spaces of new construction. Wire above accessible

ceilings shall be installed in cable trays or bundled and supported in rings. Bundle wires on 24" center with nylon wire ties. Secure individual wires above ceilings to ductwork or structure. No wire shall rest on ceilings. Provide surface raceways on inaccessible finished wall or ceiling surfaces within occupied spaces. Provide EMT conduit in equipment rooms.

F. All wire ends shall be labeled and coded to match installation drawings. Wires extending to remote switches and thermostats shall be labeled or coded to indicate line side and switched side.

G. After completion of installation, test and adjust control equipment. Submit data showing set points and final adjustments of controls.

H. Check calibration of instruments. Recalibrate or replace.

END OF SECTION 230900

SECTION 231123 – FACILITY NATURAL GAS PIPING/DIGESTER GAS PIPING

PART 1 - GENERAL

1.01 WORK INCLUDES

A. Base Bid:
   1. Contractor Provide:
      a. Natural gas piping system from Ameren meter to each piece of equipment.
      b. Connection of natural gas pipe to furnaces.
      c. Relief piping from equipment regulators.
      d. Removal of existing gas pipe.

1.02 RELATED WORK

A. Specified Elsewhere:
   1. 230529 - Supports and Anchors for HVAC.
   2. 235400 - Fuel Fired Heater.

1.03 REFERENCES

A. The International Fuel Gas Code (BOCA) 2006.

B. NFPA 54 - National Fuel Gas Code.

1.04 DESCRIPTION

A. System Parameters:
   1. Delivery pressure from Ameren shall be 5-7″ water column.
   2. Natural gas pipe shall be distributed at this pressure to each furnace.

B. Piping shall be black steel.

C. Piping shall be concealed above lay-in ceilings or within accessible attics. It shall not be run exposed in rooms with ceilings except to connect to individual equipment. Piping shall not be concealed above drywall ceilings.

D. Piping shall be exposed to the out of doors only as shown on Drawings.

1.05 SUBMITTALS

A. Submit under provisions of Section 013323.

B. Provide UL listing for valves.

C. Submit line item price for gas pipe work on Schedule of Values. Identify subcontractor.

1.06 WARRANTY

A. Warranty material and workmanship for period on one year starting with date of substantial completion.

1.07 QUALITY ASSURANCE

A. Provide welding certificates for tradesman actually doing work.

PART 2 - PRODUCTS

2.01 MANUFACTURER & PERFORMANCE

A. Unless otherwise specified the manufacturer's number specified or scheduled is listed merely as an aid to prospective bidders. In most cases it is an incomplete number and relies upon the written description to fully define the item. Where model numbers define a single manufactured item which does not include the items include in the written description, the model number shall be modified as required to most closely meet the described requirements.

2.02 PIPING

A. Above grade pipe 2″ and smaller shall be schedule 40 black steel made in accord with ASTM A-53 or A-120. Fittings shall be black malleable iron with threaded connections. Connections shall be made with teflon paste.

B. Above grade pipe 2-1/2″ and larger shall be Schedule 40 black steel made in accord with ASTM A-53 or A-120. Fittings shall be forged steel butt weld type. Flanges shall be 150 lb. weld neck type.

2.03 VALVES

A. Stop Valves 2″ and smaller shall:
1. Be bronze body with threaded ends.
2. Be two piece ball type with teflon seats and packing.
3. Be UL listed for use with natural gas.

B. Stop Valves 2-1/2″ and larger shall:
1. Be iron body with 150 flanged ends.
2. Be lubricated plug or ball configuration with teflon seats and packing.
3. Be AGA or UL listed for use with natural gas.
4. Have lockable handles or lugs.

C. Acceptable Products:

	Stop Valve 2″ and Smaller	Stop Valve 2-1/2″ and Larger
1. Nibco	TFP 600	---
2. Apollo	80 Series	---
3. Watts	FBV-1	---
4. Red & White	RW 5200 Series	---
5. Kero Test	---	125
6. Homestead	---	612
7. Milliken	---	171M

PART 3 - EXECUTION

3.01 APPLICATION

A. Above grade gas and gas vent pipe shall be black steel specified.

B. Galvanized fittings shall not be used.

3.02 EQUIPMENT CONNECTIONS

A. Equipment shall be connected only on low side of regulator.

B. Equipment shall be connected through a stop valve, union and dirt leg in that order. Dirt leg shall always be made at a change in direction. A dirt leg dropping form the runout of an in-line tee is not acceptable.

C. Final equipment connection shall be full size of opening. Do not bush or reduce connection size.

D. Drop sizes shall be as shown on drawings.

E. Provide all fittings and adaptors required to connect equipment.

3.03 PIPING

A. Piping shall be squarely cut and threaded with sufficient thread to penetrate fitting and valve a minimum of four turns.

B. Piping shall be reamed and deburred. Oil and metal shavings shall be wiped or blown out of each piece before assembly.

C. Pipe shall be supported in accord to Section 230529. Pipe shall have supports within 2′-0″ of each change in direction. Pipe shall be supported independently of equipment and regulator valves.

D. Changes in pipe size shall be made with reducing tees or reducing couplings. Do not use bushings.

E. Drops shall always be made from the branch connection of a tee. “Bullheaded tees” shall not be installed.

F. No unions or running threads shall be installed above ceilings.

G. Fire stop penetrations through rated walls per Section 230529. Caulk penetrations through outside wall with silicone matching building color. Penetrations made through concrete or masonry walls shall be sleeved with Schedule 40 PVC or coredrilled opening. Seal per Section 230529.

H. Welding shall be by an electric arc method. Welds shall be uniform and continuous. All welds shall be primer painted with rust resistant enamel.

END OF SECTION 231123

SECTION 233100 - DUCTWORK

PART 1 - GENERAL

1.01 WORK INCLUDES

A. Base Bid:
   1. Contractor Provide:
      a. Disconnection and demolition of existing duct.
      b. Provision of new lined supply, return and exhaust duct in ceiling spaces.
      c. Close wall openings left where existing duct is removed.
      d. Rectangular sheet metal supply and return duct in porch and upper attics.
      e. Round sheet metal duct in porch and upper attics.
      f. Covered exhaust duct.

B. Alternate Bids
   1. Contractor Provide for Alternate Bid No. 5.
      a. Rectangular supply and return ductwork shown located in the porch and upper level attics constructed of insulation board as specified in lieu of insulated sheet metal as required for basebid.
      b. Sheet metal duct as specified above for duct in ceiling spaces between floors.
      c. Round sheet metal branch ducts where shown in attic spaces and between floors.
      d. Covered exhaust duct as specified above.

1.02 RELATED WORK

A. Specified Elsewhere:
   1. 230529 - Supports and Anchors for HVAC.
   2. 230593 - Testing, Adjusting and Balancing for HVAC.
   3. 230720 - Ductwork Insulation.
   4. 233000 – Air Duct Accessories.
   5. 233713 – Diffusers, Registers and Grilles.

1.03 SYSTEM DESCRIPTION

A. Definitions:
   1. Ventilating Contractor = Ventilating Subcontactor.
   2. Supply Ductwork - That duct downstream of coils, heaters and similar air conditioning equipment and which discharges to a space.
   3. Exhaust Ductwork – That duct downstream of exhaust registers and grilles which discharges to the out-of-doors.
   4. Return Ductwork - That duct upstream of coils or heaters or similar air conditioning equipment and which is downstream of room air intakes.
   5. Outside Air Ductwork - That duct between outside air intakes and conditioning equipment.
   6. Exposed duct is that which can be seen from the floor of public and employee spaces. It does not include equipment rooms, garages, storage rooms or utility spaces.

7. Visible behind grilles diffusers and register means able to be seen by an individual who is sitting in a chair or standing on the floor through the louvers or blades of the diffuser grille or register.
8. Concealed duct is that above ceilings or within walls.

1.04 QUALITY ASSURANCE

A. Installers and Fabricators shall be fully familiar with S.M.A.C.N.A Construction Standards.

1.05 REGULATORY REQUIREMENTS AND STANDARDS

A. NFPA 90A – Installation of Air Conditioning and Ventilating Systems.

B. SMACNA - HVAC Duct Construction Standards - Metal and Flexible.

C. UL 181 – Factory-Made Air Ducts and Connectors.

D. International Mechanical Code 2012.

1.06 SUBMITTALS

A. Submit under provisions of Section 013300.

B. Product Data:
1. Provide data for manufactured duct and fittings.
2. Provide material safety data sheets for sealants.

C. Submit line item price for manufactured duct on Schedule of Values. Identify supplier vendor.

D. Submit license and certification of local fabricator of pre-insulated rectangular duct.

1.07 PROJECT RECORD DOCUMENTS

A. Submit under provisions of Section 017839.

B. Record actual locations of ducts and changes in duct size.

PART 2 - PRODUCTS

2.01 MANUFACTURER & PERFORMANCE

A. Unless otherwise specified the manufacturer’s number specified or scheduled is listed merely as an aid to prospective bidders. In most cases it is an incomplete number and relies upon the written description to fully define the item. Where model numbers define a single manufactured item which does not include the items include in the written description, the model number shall be modified as required to most closely meet the described requirements.

2.02 MATERIALS

A. Galvanized Steel Ducts: ASTM A525 and ASTM A527 galvanized steel sheet, lock-forming quality, having G60 zinc coating of in conformance with ASTM A90.

B. Steel Ducts: ASTM A366.

C. Flexible Ducts:
1. Construction:
a. Liner for low-pressure applications shall be polyethylene or fiber reinforced foil mechanically secured to a galvanized steel helix. It shall be rated for 6″ WG positive and 1″ WG negative.
b. Insulation shall have minimum R Value of 4.5 where used between floors and 8.0 where used in porch or upper attics, fiberglass bound to a polyethylene or fiber reinforced foil vapor barrier. Vapor barrier shall have a permeability no greater than .10 perm; and smoke developed rating less than 50 and flame spread of less than 25.
2. Maximum Velocity: 4000 fpm.
3. Temperature Range: - 20 degrees F to 175 degrees F.
4. Manufacturers:

		6″ Pressure
a.	Flexmaster	Type 5M
b.	Hart & Cooley	F116
c.	Thermaflex	M-KE

D. Fasteners: Rivets, bolts, or sheet metal screws. Match material type of metal.

E. Flexible Duct Elbow Supports:
1. Shall be used in place of steel elbows for 6" and 8" duct.
2. Shall be UL classified per UL 2043.
3. Shall install over the top of flexible duct jackets.

F. Sealants - shall be flexible setting water based, water resistant type compatible with ducts sealed. Shall have flame spread no more than 5.0 when .020" thick. Shall have anti-microbial agents. Material shall be listed and labeled in accordance to UL 181 A, B or C as applicable.

2.03 STEEL DUCTWORK FABRICATION

A. Fabricate and support in accordance with SMACNA HVAC Duct Construction Standards - Metal and Flexible, and as indicated. Provide duct material, gages, reinforcing, and sealing for operating pressures indicated. Duct shall be able to accommodate pressures of plus/minus 2″ of water gauge without collapse or leaks. Minimum gauges shall be in accord to SMACNA and ASHRAE standard except as noted on Drawings.

B. Construct T's, bends, and elbows with radius of not less than 1-1/2 times width of duct on centerline. Where not possible and where rectangular elbows are used, provide airfoil turning vanes. Provide these whether or not they are shown on the drawings.

C. Increase duct sizes gradually, not exceeding 30 degrees divergence.

D. Provide standard 45 degrees lateral wye takeoffs unless otherwise indicated where 90 degrees conical tee connections may be used.

E. Exposed duct shall be made with a minimum of joints and seams. Joint clip ends shall be removed where they overlap the width and/or height of the

duct. Longitudinal seams shall be sealed and hammered tight per installation paragraph below.

F. Remove excess sealant, fabrication and installation marks, stamps and labels, and printed steel manufacturer's labels from the outer surfaces of exposed ductwork.

G. Apply duct liner specified before fabrication.

2.04 MANUFACTURERED STEEL DUCTWORK AND FITTINGS

A. Manufacture in accordance with SMACNA HVAC Duct Construction Standards – Metal and Flexible, and as indicated. Provide duct material, gages, reinforcing, and sealing for operating pressures of 2″ of water gauge.

B. Low Pressure Duct:
1. Elbows shall be adjustable type with a minimum of four gores for duct 10″ diameter smaller and five gores for larger duct.
2. Machine shall be made from round spiral lockseam duct with light reinforcing corrugations; fittings manufactured of sheet metal at least two gauges heavier than duct.

2.05 PRE-INSULATED MANUFACTURED DUCT

A. Material Requirements
1. Shall apply to all rectangular duct and fittings designated for use in attic spaces under Alternate Bid 5 as described above.
2. Material shall be CFC/HCFC free closed cell phenolic foam faced on both sides with 1 mil aluminum foil, reinforced with .2″ glass scrim.
3. Insulation panels shall have an aged R-Value of no less than 8.0. Thickness shall be no less than 1 5/16″ thick.
4. Water vapor transmission shall be no more than 34 grains per hour-sq. ft. (per ASTM E-96).
5. Minimum compressive strength shall be no less than 29 psi.
6. Density shall be between 3.43 and 3.75 pounds per cubic foot at 10 percent compression.
7. Manufactured insulated panel with glass scrim, foil and foam shall pass U.L. Burning Test 181 with flame spread index of no more than 25 and a smoke developed index of no more than 50.
8. End connections shall be aluminum grip type flanges.

B. Manufacturer
1. Kingspan Insulation of Atlanta Georgia

C. Fabrication
1. Shall be done by trained and locally licensed firms in strict compliance with manufacturers requirements.
2. Firms shall be able to show proof of licensure and training for individuals actually doing work.
3. Fabricate duct to accommodate pressures of 4″ positive pressure and 3″ negative pressure; velocities of up to 4000 feet per minute and temperatures up to 176 degrees F.
4. Use flanges for field connections.
5. Seal all cuts into foam.

2.06 DUCT LINER

A. Composite Surface Burning Characteristics by UL 723.
   1. Flame Spread - 25.
   2. Smoke Developed - 50.

B. Physical Description – flexible edge coated inorganic fiber blanket.
   1. Density: 1.5 lb per cubic foot.
   2. K Value: ASTM C177 .27 at 75 degrees F.
   3. Maximum Service Temperature: 220 degrees F.
   4. Maximum Moisture Absorption: Less than 3 percent by volume.
   5. Flexible edge coated mat faced fiberglass which do not require“buttering” of transverse cuts to contain fiber release.
   6. Sound absorption coefficient at 1000 cycles per second shall be no less than .60.
   7. Shall be erosion resistant at air velocities of 6000 ft./minute.
   8. Shall be Greenguard Air Quality Certified.
   9. Shall be ½” thick unless noted otherwise.

C. Acceptable Products:

		Fiberglass
1.	Certainteed	Ultra Lite
2.	Schuller	Permacoate/Linacoustic
3.	Knauf	E COS
4.	Manville	Lin-a-coustic
5.	Owens Corning	Aeroflex

PART 3 - EXECUTION

3.01 REMOVAL OF EXISTING CONSTRUCTION

A. Ductwork designated for removal shall:
   1. Be removed such that all duct, hangars and associated equipment are completely gone.
   2. Be removed from the site.

B. Removals for ductwork shall include all hangers and supports.

C. Where duct removal leaves openings.
   1. Patch opening on both sides of wall with drywall or galvanized steel sheet. Pack void with fiberglass batt insulation.

3.02 SEQUENCING AND SCHEDULING

A. Coordinate work with other trades and Contractors. Review Drawings of other Contracts to determine interaction between trades.

3.03 APPLICATION

A. Galvanized steel duct shall be used throughout except as noted below.

B. Line return air duct within 10 feet of furnaces and fan coil/air handlers. Line rectangular duct downstream of furnaces within ceiling spaces and chases. Line other duct as noted on Drawings.

C. Use flexible duct between diffusers and hard duct. Limit to a maximum of 5’-0” long except where shown otherwise.

D. Use spiral formed manufactured duct and fittings for round duct.

3.04 INSTALLATION

A. Install liner and manufactured duct in accordance to manufacturers instruction except where this specification requires additional work. Liner shall prevent ducted air from contacting the metal of the duct. It shall be fully adhered to the duct. Fabricated pieces shall be allowed to defumigate before being delivered to the site.

B. Duct seams and joints shall be hammered, rolled or sealed airtight. All transverse and longitudinal joints in supply, return and exhaust ducts shall be sealed with sealant specified. Corners on fittings and connections to equipment shall be sealed tight. No leaks will be allowed.

C. Apply duct sealant according to manufacturer's instruction. Allow sealant material to acclimate before application. Do not install when space temperature is less than 40 degrees F. Remove excess material on exposed duct.

D. Locate ducts with sufficient space around equipment to allow normal operating and maintenance activities.

E. Use crimp joints with bead for joining round metal duct.

F. Use double nuts and lock washers on threaded rod supports.

G. Connect flexible ducts to metal ducts with adhesive plus sheet metal screws or draw bands. Where flexible duct approaches a diffuser neck at an angle less than 30 degrees to the horizontal, provide a fixed or adjustable 90 degrees elbow at the diffuser neck and screw or rivet and seal thereto. Bends in flexible duct tighter than 1-1/2 diameters in centerline radius are not permitted. The duct liner shall be cut short within the insulation. The duct insulation shall be extended over the elbow and diffuser neck and secured.

H. During construction provide temporary closures of metal or taped polyethylene on open ductwork to prevent construction dust from entering ductwork system. On duct which services building areas which are still occupied, by the Owner, provide metal caps sealed and screwed into place.

I. Flanged connections shall have reinforced bolted corners and spring steel clips around full perimeter.

J. Sharp corners on standing seams and supports shall be bent over and ground smooth.

K. Paint duct visible behind grilles, diffusers or registers flat black. Paint is not required on lined duct.

L. Transfer Ducts:
   1. Where building walls rise through ceiling to structure provide transfer ducts.
   2. For private offices connect flexible duct(s) through transfer opening to act as sound trap.

3.05 FIELD QUALITY CONTROL

A. Visual Inspection - Contractor shall provide visual inspection of work as it progresses to insure supports, sizes, configuration and tightness specified is maintained. A/E will occasionally inspect for same qualities.

B. If Testing and Balancing performed in Section 230593 shows fan horsepower and pressure curves do not match the volumetric readings obtained at the inlets and outlets the ducts, the ducts shall be re-inspected visually.

C. Whenever Testing and Balancing or Owner inspections determine there may be leaks in the duct system, seal openings found. Redoing Test and Balance work is an acceptable method of proving duct is airtight.

END OF SECTION 233100

SECTION 233300 – AIR DUCT ACCESSORIES

PART 1 - GENERAL

1.01 WORK INCLUDES

A. Base Bid:
   1. Ventilating Contractor Provide:
      a. Turning vanes.
      b. Duct access doors.
      c. Volume controls.
      d. Flexible connections.
      e. Bird screens.
      f. Control Dampers

1.02 RELATED WORK

A. Specified Elsewhere:
   1. 233100 - Ductwork.

1.03 REGULATORY REQUIREMENTS AND STANDARDS

A. International Mechanical Code 2006.

B. NFPA 90A - Installation of Air Conditioning and Ventilating Systems.

C. NFPA 70 - National Electrical Code.

D. SMACNA - HVAC Duct Construction Standards - Metal and Flexible.

E. UL 33 - Heat Responsive Links for Fire-Protection Service.

F. UL 555 - Fire Dampers and Ceiling Dampers.

1.04 SUBMITTALS

A. Submit under provisions of Section 013323.

B. Product Data: Provide for dampers, access doors, turning vanes and hardware used.

C. Manufacturer's Installation Instructions: Indicate for fire dampers.

D. Submit number of copies required by Owner’s representative.

1.05 PROJECT RECORD DOCUMENTS

A. Submit under provisions of Section 017839.

B. Record actual locations of access doors.

1.06 DELIVERY, STORAGE, AND HANDLING

A. Deliver, store, protect and handle products to site under provisions of Section 016600.

B. Protect dampers from damage to operating linkages and blades.

1.07 EXTRA MATERIALS

A. Provide two of each size and type of fusible links used in fire dampers.

PART 2 - PRODUCTS

2.01 MANUFACTURER & PERFORMANCE

A. Unless otherwise specified the manufacturer's number specified or scheduled is listed merely as an aid to prospective bidders. In most cases it is an incomplete number and relies upon the written description to fully define the item. Where model numbers define a single manufactured item which does not include the items include in the written description, the model number shall be modified as required to most closely meet the described requirements.

2.02 TURNING VANES

A. Shall be used only where long radius elbow will not fit.

B. Construct of galvanized steel in a double wall air foil configuration.

C. Blade runners shall mount on top and bottom of turn. Blades shall snap into runner on a 1-1/2" nominal spacing.

2.03 CONTROL DAMPERS (For Relief)

A. Insulated Type
1. Shall be insulated thermally Brolen type designed to stop condensation for cold side temperatures of 30 degrees and warm side humidity of 50%.
2. Shall have flexible blade seals.
3. Shall have resilient plastic or stainless steel side seals.
4. Shall have 24 volt modulating type Belimo actuator with end switch.

C. Acceptable Products:

1.	Ruskin	CDTI-50
2.	Greenheck	ICD

2.04 DUCT ACCESS DOORS

A. Conventional access doors shall be of double wall steel construction with 1" insulation. Provide with piano hinge. Provide one cam lock for doors less than 16" wide and two for larger doors. Provide with foam gaskets and lock down tabs. Door and frame shall be 22 gauge galvanized steel.

B. Access doors with sheet metal screw fasteners are acceptable for kitchen exhaust duct only. Seal with silicone. Secure leak tight with stainless steel screws at corners and on 3" centers.

C. Acceptable Products:

		Conventional
1.	Cesco	Model CAD
2.	National Control Air	Model AD
3.	Nailor	Model OBS Series
4.	Ruskin	Model ADH-22
5.	Vent Products	Ventlock
6.	Safe Air	SAH

2.05 FIRE DAMPERS

A. Manufacturers:
   1. Greenheck DFD
   2. Prefco Series 5500.
   3. Ruskin D-IBD2.
   4. Nailor 0110.

B. Fabricate in accordance with NFPA 90A and UL 555, for 1-1/2 hour standard fire protection rating. Damper shall be dynamic type.

C. Curtain Type Dampers: Galvanized steel with interlocking blades. Provide stainless steel closure springs and stainless steel jamb seals. Blades shall be within air stream.

D. Fusible Links: Shall meet UL 33. Rating shall be 160 degrees F.

2.06 FLEXIBLE DUCT CONNECTIONS

A. Fabricate in accordance with SMACNA HVAC Duct Construction Standards - Metal and Flexible, and as indicated.

B. Connector: Fabric crimped into metal edging strip.
   1. Fabric: UL listed fire-retardant neoprene coated woven glass fiber fabric to NFPA 90A, minimum density 30 oz per sq. yd.
   2. Net Fabric Width: Approximately 3″ wide.
   3. Metal: 1" wide, 24 gage galvanized steel.

2.07 VOLUME CONTROL DEVICES

A. Fabricate in accordance with SMACNA HVAC Duct Construction Standards - Metal and Flexible, and as indicated.

B. Splitter Dampers:
   1. Material: Same gage as duct to 24″ size in either direction, and two gages heavier for sizes over 24″.
   2. Blade: Fabricate of double thickness sheet metal to streamline shape, secured with continuous hinge or rod.
   3. Operator: Quadrant type.

C. Single Blade Dampers: Fabricate for duct sizes up to 12" x 20". Provide end bearings in all sizes except those 10″ and smaller.

D. Manual Damper Operators:
   1. Shall be lockable quadrant type for use in accessible ductwork. Quadrant shall have graduations, and set screw let lever handle. Rods shall be 3/8″ square key stock.

PART 3 - EXECUTION

3.01 INSTALLATION

A. Install accessories in accordance with manufacturer's instructions, NFPA 90A and IMC 2006. Follow SMACNA HVAC Duct Construction Standards - Metal and Flexible. Refer to Section 233100 for duct construction.

B. Provide backdraft dampers where indicated.

C. Provide duct access doors for inspection and cleaning at fire dampers and elsewhere as indicated. Provide minimum 8 x 8 inch size for hand access, unless otherwise shown.

D. Demonstrate re-setting of fire dampers to Owner's representative.

E. Provide flexible connections immediately adjacent to equipment in ducts associated with fans and motorized equipment.

F. Provide balancing dampers on duct take-off to diffusers, grilles, and registers, regardless of whether dampers are specified as part of the diffuser, grille, or register assembly See Section 233713. Install minimum two duct widths from duct take-off.

G. Use splitter dampers on nested fittings.

END OF SECTION 233300

SECTION 233423 - FANS

PART 1 - GENERAL

1.01 WORK INCLUDES

A. Base Bid:
   1. Contractor Provide:
      a. Centrifugal ceiling fans with intake grilles.
      b. Centrifugal inline ceiling fans.
   2. Contractor Furnish:
      a. Speed controls and thermostats

1.02 RELATED WORK

A. Specified Elsewhere:
   1. 233100 - Ductwork.
   2. 233300 - Air Duct Accessories.
   3. 230593 - Testing, Adjusting and Balancing for HVAC.

1.03 REFERENCES

A. AMCA 99 - Standards Handbook.

B. AMCA 211 - Laboratory Methods of Testing Fans for Rating Purposes.

C. AMCA 261 - Directory of Products Licensed to bear the AMCA Certified Ratings Seal.

D. AMCA 300 - Test Code for Sound Rating Air Moving Devices.

E. AMCA 311 - Method of Publishing Sound Ratings for Air Moving Devices.

F. NEMA MG1 - Motors and Generators.

G. NFPA 70 - National Electrical Code.

1.04 DESCRIPTION

A. Definition:
   1. Ventilating Contractor = Ventilating Subcontractor for this work.

1.05 SUBMITTALS

A. Submit under provisions of Section 013323.

B. Product Data: Provide data on fans and accessories including fan curves with specified operation point clearly plotted, sound power levels at rated capacity, and electrical characteristics and connection requirements. Fan curves are required. Single points will not be acceptable.

C. Manufacturer’s Installation Instructions.

D. Submit line item price for fans on Schedule of Values. Identify supplier vendor.

E. Submit manufacturer’s start-up check list requirements for starting fans with product data.

1.06 OPERATION AND MAINTENANCE DATA

A. Submit under provisions of Section 017823.

B. Maintenance Data: Include instructions for lubrication, motor and wheel replacement, spare parts list, and wiring diagrams.

C. Commissioning: Submit an executed copy of the manufacturer's start up check list.

1.07 COORDINATION

A. With Electrical Trades:
1. Deliver disconnect switches, thermostats and speed controls for installation.
2. Confirm rough-in location of devices.

PART 2 - PRODUCTS

2.01 MANUFACTURER & PERFORMANCE

A. Unless otherwise specified the manufacturer's number specified or scheduled is listed merely as an aid to prospective bidders. In most cases it is an incomplete number and relies upon the written description to fully define the item. Where model numbers define a single manufactured item which does not include the items include in the written description, the model number shall be modified as required to most closely meet the described requirements.

2.02 PRODUCT REQUIREMENTS

A. Performance Ratings: Conform to AMCA 211 and bear the AMCA Certified Rating Seal.

B. Sound Ratings: AMCA 311, tested to AMCA 300, and bear the AMCA Certified Sound Rating Seal.

C. Fabrication: Conform to AMCA 99.

D. UL Compliance: UL listed and labeled, designed, manufactured, and tested in accordance with UL 705.

E. Centrifugal Ceiling Fans:
1. Fan wheel shall be forward curved; Mechanically fastened and/or welded; Statically and dynamically balanced; Keyed to motor shaft.
2. Motor: Totally enclosed, fan cooled NEMA motor with thermal overload protections.
3. Fan drive shall be direct driven from motor.
4. Fan housing shall be constructed of galvanized steel with minimum of 1/2" of coated fiberglass acoustical liner.
5. Electrical Characteristics and Components:
a. Motor: Shall be open drip proof type with built-in thermal protection. Shall be capable of accepting speed control. Shaft bearings shall be permanently lubricated.
b. Wiring Terminations: Provide terminal lugs to match branch circuit conductor quantities, sizes, and materials indicated. Enclose terminal lugs in terminal box sized to NFPA 70.
c. Disconnect Switch: Cord and plug in housing for thermal overload protected motor. Provide accessories noted on Drawings.
d. Speed control shall be rated for fractional horsepower capable of reducing fan speed to at least 50 percent of rated speed.
e. Vibration isolators shall be rubber-in-shear type.

f. Thermostats shall be line voltage single pole type that close upon a rise in temperature. Range shall be 55 to 85 degree minimum.

6. Grille (where shown on Drawings: Punched aluminum with baked white enamel finish. Fasteners shall be screw type.
7. Backdraft damper shall be integral with fan discharge.

C. Acceptable Products:
1. Cook Gemini
2. Greenheck SP & CSP
3. Twin City T&TL Series

PART 3 - EXECUTION

3.01 INSTALLATION

A. Install in accordance with manufacturer’s instructions.

B. Ceiling Fans:
1. Support in accord to manufacturer’s direction and details on Drawing.
2. Vibration isolators.

C. Do not operate fans for any purpose until duct work is clean, filters in place, bearings lubricated, and fan has been test run under observation.

END OF SECTION 233423

SECTION 233713 – DIFFUSERS, REGISTERS AND GRILLES

PART 1 - GENERAL

1.01 WORK INCLUDES

A. Base Bid:
   1. Contractor Provide:
      a. Demolition of existing grilles and diffusers in ceilings shown to remain..
      b. New diffusers, registers, return grilles and transfer grilles.

1.02 RELATED WORK

A. Specified Elsewhere:
   1. 230593 – Testing Adjusting and Balancing for HVAC.
   2. 233100 – Ductwork.
   3. 233000 – Air Duct Accessories.

1.03 REFERENCES

A. ADC 1062 - Certification, Rating and Test Manual.

B. AMCA 500 - Test Method for Louvers, Dampers and Shutters.

C. ARI 650 - Air Outlets and Inlets.

D. ASHRAE 70 - Method of Testing for Rating the Air Flow Performance of Outlets and Inlets.

E. SMACNA - HVAC Duct Construction Standard - Metal and Flexible.

F. NFPA 70 - National Electrical Code.

G. NFPA 90A - Installation of Air Conditioning and Ventilating Systems.

1.04 DESCRIPTION

A. Definition:
   1. Ventilating Contractor = Ventilating Subcontractor.
   2. Register – Is a grille with an attached damper.
   3. Register, Grille and Diffuser Dimensions Size = A x B where A = Width and B = Height.

1.05 SUBMITTALS

A. Submit under provisions of Section 013300. Contractor’s shall examine submittals furnished by suppliers and determine if submittals are complete an accurate before forwarding them to the A/E. Submittals for this section shall include:
   1. A room by room schedule showing each device, its model, its neck size, the outside dimensions of the airway, number and direction of throw and mounting type.

B. Submittals without evidence of contractor verification or without schedules will be returned to contractors before A/E reviews them further.

C. Submit layouts on duct drawings.

D. Color samples shall be submitted before or with other submittals. Submit approximate days color selection will add to delivery time.

E. Submit line item price for grilles and diffusers on Schedule of Values. Identify supplier vendor.

PART 2 - PRODUCTS

2.01 MANUFACTURER & PERFORMANCE

A. Unless otherwise specified the manufacturer’s number specified or scheduled is listed merely as an aid to prospective bidders. In most cases it is an incomplete number and relies upon the written description to fully define the item. Where model numbers define a single manufactured item which does not include the items include in the written description, the model number shall be modified as required to most closely meet the described requirements.

2.02 REGISTERS, GRILLES AND DIFFUSERS

A. All units:
1. Shall have a minimum over lap margin of 1”.
2. Shall have off-white baked enamel finish. Certain units shall be field painted. These shall be capable of accepting that paint.
3. Shall have accessory mounts to match ceiling or wall finish type shown on Architectural Drawings.

B. Directional (louvered) diffusers shall:
1. Be “snap-in” louvered core type with 1, 2, 3 or 4 way discharge pattern.
2. Be of welded steel construction with hair line joints.
3. Have beveled overlap margin for surface mount on plaster drywall ceilings and 23-3/4 x 23-3/4 white pans for lay-in ceilings.
4. Have square to round adaptors where used with round duct.
5. Have adjustable vane or flap at the perimeter of the discharge which can direct air horizontally or vertically.

C. Return grilles in ceilings shall be constructed with rolled steel face bars set at .67” to 3/4" centers with a welded and gusseted 18 gauge steel frame. Provide intermediate mullions to limit face bar span to a maximum of 12”. Blades shall be set at 0 degrees.

D. High sidewall and ceiling supply registers shall have individually adjustable vertical front bars on .75” centers and horizontal rear bars set on .667” to .75” centers. Front bars shall be rolled steel. Rear bars shall be rolled steel. Rear bars shall be rolled steel. Construct frame with welded gussetted joints. Provide with face mounted, counter sunk mounting screw holes.

M. Low sidewall return and transfer grilles have straight face bars set at 0 degrees on .5” to .67” centers. Bars shall be 14 gauge. Frame shall be 16 or 18 gauge with welded and gusseted construction. Bars shall run the short dimension and have mullions on a minimum of 6" on center. Provide with counter punched mounting holes.

N. Acceptable Products:

Manufacturers Type	Krueger	Price	Titus
1. Directional Diffusers	SHPC	SMDA	TDCA

2. High wall & Ceiling Return	S80H/S580H	530 Series	350R Series
3. Exhaust and Transfer Grilles			
4. Sidewall/Ceiling Registers	800/5880	520 Series	300 Series
5. Low Sidewall Grilles	S480	97S	30RS

PART 3 - EXECUTION

3.01 PREPARATION

A. Determine position of diffusers, grilles and registers.

B. Check if discharge pattern covers room space.

3.03 INSTALLATION

A. Install in accordance with manufacturer's instructions.

B. Check location of outlets and inlets and make necessary adjustments in position to conform with architectural features, symmetry, and lighting arrangement.

C. Install diffusers to ductwork with air tight connection.

D. Provide balancing dampers on duct take-off to diffusers, and grilles and registers, despite whether dampers are specified as part of the diffuser, or grille and register assembly.

E. Paint ductwork visible behind air outlets and inlets matte black.

F. Adjust rear and face bars of adjustable grilles and registers to deflect air into occupied zones.

END OF SECTION 233713

SECTION 233723 – HVAC GRAVITY VENTILATORS

PART 1 - GENERAL

1.01 WORK INCLUDES

A. Base Bid:
   1. Contractor Provide:
      a. Louvers.

1.02 RELATED WORK

A. Specified Elsewhere:
   1. 230593 – Testing Adjusting and Balancing for HVAC.
   2. 233100 – Ductwork.
   3. 233000 – Air Duct Accessories.

1.03 REFERENCES

A. ADC 1062 - Certification, Rating and Test Manual.

B. AMCA 500 - Test Method for Louvers, Dampers and Shutters.

C. ARI 650 - Air Outlets and Inlets.

D. ASHRAE 70 - Method of Testing for Rating the Air Flow Performance of Outlets and Inlets.

E. SMACNA - HVAC Duct Construction Standard - Metal and Flexible.

F. NFPA 90A - Installation of Air Conditioning and Ventilating Systems.

1.04 SUBMITTALS

A. Submit under provisions of Section 013300. Contractor’s shall examine submittals furnished by suppliers and determine if submittals are complete an accurate before forwarding them to the A/E. Submittals for this section shall include:
   1. Height and width dimensions of louvers and verification that subcontractors and general contractors have verified these items.

B. Submittals without evidence of contractor verification or without schedules will be returned to contractors before A/E reviews them further.

C. Color samples shall be submitted before or with other submittals. Submit approximate days color selection will add to delivery time. Samples shall be actual material on which color is applied. Emailed and printed color charts are not acceptable for final sections; these can be used only for narrowing the range.

D. Submit line item price for louvers on Schedule of Values. Identify supplier vendor.

PART 2 - PRODUCTS

2.01 MANUFACTURER & PERFORMANCE

A. Unless otherwise specified the manufacturer’s number specified or scheduled is listed merely as an aid to prospective bidders. In most

cases it is an incomplete number and relies upon the written description to fully define the item. Where model numbers define a single manufactured item which does not include the items include in the written description, the model number shall be modified as required to most closely meet the described requirements.

2.03 LOUVERS

A. Drainable type shall be 4″ deep with blades having integral gutters and downspouts, heavy channel frame, birdscreen with 1/2" square or diamond mesh. Blades shall be on 30 to 45 degree angle.

B. Fabrication: Extruded aluminum, welded assembly, with factory natural anodized or Kynar finish with color selected by the A/E. Note louvers in different substrates shall require different colors be available.

C. Mounting: Furnish with screw holes in jambs for installation. Provide aluminum sill under each louver.

D. Assembly shall be AMCA rated to pass no more than .025 oz/sq. ft/15 minutes at 1100 FPM intake velocity.

E. Unit shall have free area no less than noted on drawings.

F. Acceptable Products:
1. Ruskin 6375D
2. Greenheck ESD635

PART 3 - EXECUTION

3.01 INSTALLATION

A. Install in accordance with manufacturer's instructions.

B. Louvers in Masonry Walls:
1. Attach a liner sleeve flush with outer face of opening. Secure sleeve on backside of wall with escutcheon angle.
2. Pack voids between existing construction and sleeve with tightly compacted fiberglass batt.
3. Install louver into sleeve with front flush with outer wall. Secure louver to sleeve from inside with fasteners on maximum of 12″ centers and at corners. Seal full perimeter of louver and opening with colored silicone which most closely matches louver and siding color.

END OF SECTION 233713

SECTION 235400 - FUEL FIRED HEATERS

PART 1 - GENERAL

1.01 WORK INCLUDES

A. Base Bid:
   1. Contractor Provide:
      a. Gas fired/heat pump furnaces and direct expansion cooling coils.
      b. Thermostat/humidity sensors for each furnace/air conditioner.
      c. Mixing box and economizer controls.
      d. Carbon dioxide controls.
      e. Provision of condensate drain piping and deep seal traps.
      f. Three sets of filters for each furnace.

1.02 RELATED WORK

A. Specified Elsewhere:
   1. 230593 - Testing, Adjusting and Balancing for HVAC.
   2. 230900 = Temperature Controls.
   3. 231123 - Facility Natural Gas Piping.
   4. 236200 - Air Cooled Condensing Units.
   5. 237313 – Indoor air handling units.

1.03 REFERENCES

A. ANSI/ASHRAE 103 - Heating Seasonal Efficiency of Central Furnaces and Boilers, Methods of Testing.

B. ANSI/NFPA 90B - Installation of Warm Air Heating and Air Conditioning Systems.

C. ANSI/Z223.1 (NFPA 54) - National Fuel Gas Code.

D. NFPA 90A - Installation of Air Conditioning and Ventilating Systems.

E. ASHRAE 1 IESNA 90.1 - Energy Efficient Design of New Buildings except Low-Rise Residential Buildings.

1.04 REGULATORY REQUIREMENTS

A. The International Mechanical Code 2012.
B. The International Fuel Gas Code 2012.
C. The International Energy Conservation Code 2012.

1.05 SUBMITTALS

A. Submit under provisions of Section 013300.

B. Product Data: Provide manufacturer's literature and data indicating rated capacities, weights, accessories, electrical nameplate data, and wiring diagrams. Provide tables relating volumetric capacity with external static pressure for furnaces. Provide tables relating cooling capacity of coils and pressure drop across coils for various airflow.

C. Manufacturer's Installation Instructions:
   1. Provide blank copy of manufacturer's check list for startup and initial operation of the unit.

D. Manufacturers control drawings shall indicate all required devices. Drawings shall be particular for unit. Indicate all field installed devices.

E. Submit line item price for furnaces on Schedule of Values. Identify supplier vendor. Submit a separate line item cost for the startup commissioning for all furnaces.

1.06 OPERATION AND MAINTENANCE DATA

A. Submit operation data under provisions of Section 017823.

B. Include manufacturer's descriptive literature, operating instructions, maintenance and repair data, and parts listing.

C. Submit executed manufacturer's check list for the startup and commissioning of each furnace and associated air conditioner air cooled condensing unit.

1.07 WARRANTY

A. Extend warranty period for fuel fired equipment to include one complete uninterrupted heating season after substantial completion.

B. Provide manufacturer’s five year warranty for heat exchanger. Provide executed warranty cards and notifications for the particular equipment used for this project.

PART 2 - PRODUCTS

2.01 MANUFACTURER & PERFORMANCE

A. Unless otherwise specified the manufacturer’s number specified or scheduled is listed merely as an aid to prospective bidders. In most cases it is an incomplete number and relies upon the written description to fully define the item. Where model numbers define a single manufactured item which does not include the items include in the written description, the model number shall be modified as required to most closely meet the described requirements.

2.02 FURNACES

A. Units: Self-contained, packaged, factory assembled, pre-wired unit consisting of cabinet, supply fan, motor and drive, draft controls, heat exchanger, burner, burner fan, refrigerant cooling coil and controls. Configuration shall be multi-positional. Assembled unit shall be listed by UL and AGA.

B. Performance Ratings: Seasonal efficiency to ASHRAE 90.1. Minimum 92 percent AFUE.

C. Cabinet: Galvanized steel with baked enamel or galvanized finish steel, easily removed and secured access doors, glass fiber insulation and reflective liner.

D. Heat Exchanger: Aluminized welded construction. Secondary heat exchanger shall be stainless steel or polypropylene laminated.

E. Supply Fan: Centrifugal forward curved type with direct multi-speed or variable speed drive. Motor shall be split capacitor type with permanently lubricated bearings.

F. Burner and Combustion:
   1. Shall be sealed from building air. Provide connection points for both intake and relief.
   2. Shall have electric draft inducer.
   3. Shall have hot surface ignition.
   4. Shall have combination gas valve and pressure regulator incorporating manual shut-off, and automatic 100 percent redundant shut-off.
   5. Gas Burner Safety Controls: Provide proof of draft flow, flame verification and purge cycles. Allow multiple auto reset up to maximum of three failures. Include high limit with manual reset.

G. HVAC Capacities:
   1. Heating, cooling and airflow capacities shall be as scheduled on the drawings.
   2. Heating capacity shall be smallest the manufacturer offers which meets the minimum requirement and still be part of a furnace which meets the airflow requirement for cooling operation.

H. Evaporator Coil: Copper tube aluminum fin assembly, insulated galvanized drain pan, drain connection, refrigerant piping connections and factory installed thermostatic expansion devices for both heating and cooling functions. Coil enclosure shall be factory or field fabricated as required to match furnace. Coil shall have drain pan with primary and secondary outlets.

I. Controls:
   1. Provide outside air mixing box and control options as scheduled.
   2. Mixing boxes shall be manufactured devices with two sets of parallel blade dampers linked together such that one set closes while the other opens. Dampers shall have foam seals and nylon bearings. Operators shall be 24 volt electric modulating type with spring return.
   3. Thermostat controller shall be micro processor based. It shall be capable of maintaining discharge air temperature and room temperature by cycling the burners of furnace and air cooled condensing units. It shall open outside air damper and close return damper to accommodate minimum outside air requirements. Controller shall have programmable seven daytime function to maintain occupied and unoccupied set points. Ventilation fan shall operate continuously during occupied periods automatically. On specified units, occupied set points shall open minimum outside air dampers or mixing box to minimum position and maintain 75 degrees F cooling temperature and 72 degrees F heating temperature. Heating shall be provided by heat pump system at ambient temperatures above 28 degrees F. Gas heat shall energize if heat pump capacity is insufficient or at ambient temperatures less than 28 degrees F. Provide winter time free cooling by positioning mixing box dampers to maintain a 54 degrees F discharge temperature whenever space calls for cooling and outdoor temperatures are 54 degrees F or below. During unoccupied periods set points shall maintain 85 degrees F cooling temperature and 65 degrees F heating temperature. Minimum outside air shall be closed. Schedule for occupied/unoccupied modes will be provided by the user. Thermostat controller shall contain a humidty sensor and shall operate cooling whenever humidity levels exceed 60 percent R.H.
   4. Furnace's 24v transformer shall be sized or augmented as required to accommodate specified mixed air dampers.
   5. Carbon dioxide sensor shall have 0 to 2000 part per million range with 0 to 10 volt output. It shall be duct mountable and have a aspirating box. It shall have a pushbutton interface. It shall use the dual beam absorption infrared algorithm. It shall display 0 -

10,000 parts per million. It shall operate between 32 and 122 degrees F. It shall be connectable to 18 gauge stranded copper wire. It shall work with actuator described above to provide required sequence of operation.

J. Combustion inlet and discharge: Shall be Schedule 40 solid wall PVC meeting ASTM D1785 or D2665. Furnace connections shall be flexible type with mechanical band connector. Termination shall be either concentric type or shall be simple PVC elbows with inlet and discharge screens.

K. Filter: Easily removed 4″ thick MERV 7 pleated fabric throwaway type Air Bear or equivalent Farr. Filters shall be located in fabricated or manufactured boxes for filters hinges, thumbnuts or cam-locks. Provide three sets of filters; one for startup and air balance, one set for substantial completion and one set spare. See Section 233100 for fabricated boxes.

L. Thermostat covers shall be lockable acrylic type which fully encloses thermostat. See Section 230900.

M. Condensate drain pipe shall be Schedule 40 PVC.

N. Acceptable Products:
1. Furnaces:
a. See Schedule on Drawings for basis of design. Acceptable products include equivalents by Trane, Carrier and Lennox.
2. Mixing Box:
a. Micrometyl.
3. Carbon Dioxide Sensors:
a. Carrier 33ZCSENC02/33ZCASPC02
b. Trane Equivalent
c. Kele Equivalent
d. Lennox Equivalent

PART 3 - EXECUTION

3.01 INSTALLATION

A. Install in accordance with manufacturer's instructions, and in accord to Drawings.

B. Install to the International Fuel Gas Code 2012 and International Mechanical Code 2012.

C. Controls shall be installed per Section 230900.

D. Verify all dampers work without binding.

E. Extend 24 volt power connections from furnace circuit to operate damper motors. Provide additional transformer and fusing required to operate damper motors. Provide fusing on both primary and secondary sides of transformers. Primary side of additional transformers shall de-energize with furnace.

F. Combustion air and furnace vent shall be routed through pipe required and sized per the furnace manufacturer. Pipes shall route through the wall and be mortared in to place. Vents shall be routed at least 10′-0″ away from ventilation intakes or relief vents.

G. Condensate Drain Pipe:
1. Shall be pitched to drain at minimum of 1″ in 10 feet.

2. Shall be secured to floor with galvanized malleable iron straps.
3. Shall have deep seal traps with removable cleanouts at coil connections. Shall have open tee for furnace hose connection.
4. Each furnace and cooling coil assembly served by the same supply fan shall be piped independently from other furnaces and coils.

3.02 PROTECTION

A. During Construction:
1. Do not use any furnaces for heating, cooling or ventilating functions until dusty construction operations are complete. This includes drywall installation, sanding, clean up and paint application.
2. Do not operate units without filters in place.

3.03 OWNER TRAINING See Section 230900.

END OF SECTION 235400

SECTION 236200 - AIR COOLED CONDENSING UNITS

PART 1 - GENERAL

1.01 WORK INCLUDES

A. Base Bid:
   1. Contractor Provide:
      a. New air cooled condensing/heat pump units to match furnace units specified in Section 235400 and fan coil/air handling units.
      b. Refrigerant suction and liquid pipe and accessories.
      c. Commissioning of all units.
      d. Removal of existing self-contained window units.

1.02 RELATED WORK

A. Specified Elsewhere:
   1. 220700 - Piping Insulation.
   2. 235400 - Fuel Fired Heaters.
   3. 237313 – Indoor Air Handling Units.

1.03 REFERENCES

A. ANSI/ASHRAE 15 - Safety Code for Mechanical Refrigeration.

B. ANSI/ASHRAE 90A - 1999 - Energy Conservation in new Building Design. (Except Low Rise Residential Buildings)

C. UL 1995 - Central Cooling Air Conditioners.

D. ARI 520 - Positive Displacement Refrigerant Compressors, Compressor Units and Condensing Units.

E. ASHRAE 14 - Methods of Testing for Rating Positive Displacement Condensing Units.

1.04 DESCRIPTION

A. Definitions:
   1. Heating Contractor = Heating Subcontractor for this work.

B. Compressor/condensing/heat pump units shall be matched to the cooling coils on the furnace and fan coil units.

1.05 QUALIFICATIONS

A. For Work with Refrigerant:
   1. Workers shall be certified in accord to the US EPA Refrigerant Certification Program.
   2. Technicians shall be employed by a service company regularly engaged for refrigeration service work.

1.06 SUBMITTALS

A. Submit shop drawings under provisions of Section 013300.

B. Submit product data drawings indicating components, assembly, dimensions, weights and loadings, required clearances, and location and size of field connections. Include schematic layouts showing condensing units, cooling coils, refrigerant piping, and accessories required for complete system.

Include electric power and control schematics, control schematics shall include air flow switches reversing valves and solenoid valves.

C. Submit product data under provisions of Section 013300.

D. Submit product data indicating rated capacities, operating characteristics, weights specialties and accessories, electrical nameplate data, and wiring diagrams.

E. Submit manufacturer's blank warranty registration to be filled in by installer for each unit.

F. Submit manufacturer's blank check list to be filled in during startup commissioning for each unit.

G. Submit copy of US EPA Refrigerant Certification Program Certificates for actually performing refrigeration work.

H. Submit line item price for air cooled condensing/heat pump units on Schedule of Values. Identify supplier/vendor.

I. Submit name of commissioning technician in a readable form and as a signature.

1.07 OPERATION AND MAINTENANCE DATA

A. Submit operation and maintenance data under provisions of Section 017823.
B. Include start-up instructions, maintenance instructions, parts lists, controls, and accessories. Include a check list for each condensing unit with its counter part cooling coil.

1.08 DELIVERY, STORAGE, AND HANDLING

A. Deliver products to site under provisions of Section 016000.
B. Store and protect products under provisions of Section 016000.
C. Comply with manufacturer's installation instructions for rigging, unloading, and transporting units.
D. Protect units on site from physical damage. Protect coils.

1.09 WARRANTY

A. Provide one year parts and labor warranty for air cooled condensing/heat pump units. Warranty shall include a complete cooling season and a complete heating season.
B. Provide a five year extended parts only warranty for compressors.
C. Provide an executed warranty registration for each air cooled condensing/heat pump unit installed.

PART 2 - PRODUCTS

2.01 MANUFACTURER & PERFORMANCE

A. Unless otherwise specified the manufacturer’s number specified or scheduled is listed merely as an aid to prospective bidders. In most cases it is an incomplete number and relies upon the written description to fully define the item. Where model numbers define a single manufactured item which does not include the items include in the written description, the model number shall be modified as required to most closely meet the described requirements.

2.02 MANUFACTURERS

A. See Schedule on Drawings.

2.03 AIR COOLED COMPRESSOR CONDENSING/HEAT PUMP UNITS

A. Units: Self-contained, packaged, factory assembled and pre-wired units suitable for outdoor use consisting of cabinet, compressors, condensing coil and fans, integral sub-cooling coil, controls, liquid receiver, and inlet, outlet screens, and hail guards.

B. Construction and Ratings: In accordance with ARI 210/240. Testing shall be in accordance with ASHRAE 14.

C. See Schedule on Drawings for performance requirements.

D. House components in pressed steel frame with galvanized steel panels with weather resistant, baked enamel finish.

E. Mount contactors, and controls in weatherproof boxes provided with full opening access panels.

F. Coils: Aluminum fins mechanically bonded to seamless copper tubing. Provide sub-cooling circuits. Air test under water to 425 psig, and dehydrate. Seal with holding charge of nitrogen or refrigerant.

G. Coil Guard: Shall be Expanded metal, Louvered, or PVC coated steel wire.

H. Fans and Motors:
1. Vertical discharge direct driven propeller type condenser fans with fan guard on discharge. Propeller shall be statically and dynamically balanced, and keyed to motor shaft.
2. Weatherproof motors suitable for outdoor use, single phase permanent split capacitor with permanent lubricated ball bearings and built in current and thermal overload protection. Fan Motor shall be mounted to unit frame with spider braces.

I. Compressors (5 Tons & Less):
1. Shall be hermetic scroll with built-in thermostatic electric over current protection and starting capacitor.
2. Shall have sound insulating hood.
3. Shall be rated for continuous operation down to 35 degrees F.
4. Shall be mounted on rubber in shear dampening vibration isolators.

J. Controls and Electrical Connections:
1. Shall be in weatherproof steel enclosure, containing power and control wiring, factory wired with single point power connection.
2. For each compressor, provide contactor, Anti-short cycle timer, and control power transformer or terminal for controls power. Provide manual reset current overload protection. For each condenser fan, provide fan relay.
3. Provide the following safety controls arranged so that operating any one will shut down machine and require manual reset:
   a. High discharge pressure switch manual reset for each compressor.
   b. Low suction pressure switch automatic reset for each compressor.
4. Provide the following operating controls:
   a. Periodic pump-out timer to pump down on high evaporator refrigerant pressure.
   b. Reversing valve for switch between heating and cooling operation.
   c. Low ambient cut off for heat pump operation.
   d. Low ambient cut off for cooling operation.

2.04 PIPE & SPECIALTIES

A. Pipe:
1. Shall be flexible copper ACR tubing.
2. Fittings shall wrought copper type complying with ASME B16.22.
3. Joints shall be made with brazing alloy with melting range of 1190 to 1480 degrees F.
4. Insulation shall meet energy code requirements for line sets, and specification Section 220700.

B. Moisture Indicators:
1. Shall be copper or brass boded with solder ends, rated for 430 psig.
2. Shall include sight glass and color coded indicator.
3. Shall have reusable plastic cap.

C. Filter Dryer:
1. Shall be steel canister type with solder connections complying with ARI 710.
2. Shall include desiccant filter core.
3. Shall have rating to match compressor-condensing unit capacity.

D. Charging Valves:
1. Shall have brass caps and removable valve core with integral ball check.
2. Shall have forged brass body with solder connection.

PART 3 - EXECUTION

3.01 INSTALLATION

A. Install in accordance with manufacturer's instructions.

B. Provide connection to refrigeration piping system and evaporators.

C. Install units on concrete pads or curbs in accord to Section 230529. Mount to pad on neoprene isolator pads. Level units by shimming neoprene pads. Provide at least two concrete anchors and threaded rod through neoprene pad on diagonal points. Anchor units to pads with at least one anchor per unit.

D. Piping:
1. Route substantially as shown on the drawings.
2. Minimize use of 90 degree changes in direction. Make changes in direction with bending tools.
3. Secure piping to structure. Isolate copper pipe from steel hangers.
4. Insulate suction piping in accord to Section 230710. Allow room to accommodate insulation.
5. Bundle liquid piping together with suction piping when sizes are 0.5″ diameter or less. Use nylon draw-bands.
6. Secure vertical piping to walls with strut hangers per Section 230529.
7. Locate liquid line dryers and site glasses adjacent to the compressor condenser units.
8. Joints shall be made with foss brazing or silver solder. Flood piping with dry nitrogen during brazing or soldering process.
9. Flush assembled piping systems with dry nitrogen and evacuate fully before charging.

E. Commissioning:
1. Shall be completed by factory trained personnel.

3.02 MANUFACTURER'S FIELD SERVICES

A. Shall be performed by factory trained service personnel. Contractors personnel and manufacturers representatives are acceptable if they can provide official proof of training.

B. Provide initial and cooling season start-up, and winter season shut down during first year of operation, including routine servicing and check out.

C. Supply initial charge of refrigerant and oil for each refrigerant circuit. Replace losses of refrigerant and oil.

D. Inspect and test for refrigerant leaks at the end of the first cooling season. Repair leaks found, and replace refrigerant.

3.03 EVALUATION OF EXISTING UNITS

A. Inspect existing wall and window units while they are still in operation.
   1. Record operational data as required for startup of new units.
   2. Note any problems and bring them to the immediate alteration of the Architect/Engineer and Owner.

B. Remove window units. Deliver to park district building in Peoria that Owner designates.

C. Do not utilize new or existing units during construction and renovation activities.

END OF SECTION 236200

SECTION 237313 - INDOOR AIR HANDLING UNITS

Part 1 - GENERAL

1.01 WORK INCLUDES

A. Base Bid:
   1. Contractor Provide:
      a. Indoor blower/fan heat pump/cooling coils and accessories.
      b. Filters and filter rack for heat pump unit.
      c. Air mixing boxes with economizer controls.
      d. Controls for equipment noted above.

1.02 RELATED WORK

A. Specified Elsewhere:
   1. 230720 – HVAC Duct Insulation.
   2. 233100 – Ductwork.
   3. 233300 – Air Duct Accessories.

1.03 REFERENCES

A. AMCA 210 - Laboratory Methods of Testing Fans for Rating Purposes.

B. AMCA 300 - Test Code for Sound Rating Air Moving Devices.

C. AMCA 301 - Method of Publishing Sound Ratings for Air Moving Devices.

D. ARI 410 - Forced-Circulation Air-Cooling and Air-Heating Coils.

E. NEMA MG1 - Motors and Generators.

F. NFPA 70 - National Electrical Code.

G. SMACNA - HVAC Duct Construction Standards - Metal and Flexible.

H. UL 900 - Test Performance of Air Filter Units.

1.04 SUBMITTALS

A. Submit under provisions of Section 013300.

B. Product Data:
   1. Provide literature which indicates dimensions, weights, capacities, ratings, fan performance, gages and finishes of materials, and electrical characteristics and connection requirements.
   2. Provide data of filter media, filter performance data, filter assembly, and filter frames.
   3. Provide charts relating air flow and external static prssure.
   4. Submit sound power level data for both fan outlet and casing radiation at rated capacity.

C. Submit line item price for fan coils on Schedule of Values. Identify supplier vendor.

1.05 OPERATION AND MAINTENANCE DATA

A. Submit under provisions of the General Conditions.

B. Maintenance Data: Include instructions for lubrication, filter replacement, motor and drive replacement, spare parts lists, and wiring diagrams.

1.06 DELIVERY, STORAGE, AND HANDLING

A. Deliver, store, protect and handle products to site under provisions of Section 016000.

B. Accept products on site in factory-fabricated protective containers, with factory-installed shipping skids and lifting lugs. Inspect for damage.

C. Store in clean dry place and protect from weather and construction traffic. Handle carefully to avoid damage to components, enclosures, and finish.

1.07 START-UP REQUIREMENTS

A. Do not operate units for any purpose, temporary or permanent, until ductwork is complete and clean, grilles and registers are in place, filters are in place, temperature controls are installed and are in operation and fan has been test run under observation.

Part 2 - PRODUCTS

2.01 MANUFACTURER & PERFORMANCE

A. Unless otherwise specified the manufacturer’s number specified or scheduled is listed merely as an aid to prospective bidders. In most cases it is an incomplete number and relies upon the written description to fully define the item. Where model numbers define a single manufactured item which does not include the items include in the written description, the model number shall be modified as required to most closely meet the described requirements.

2.02 HEAT PUMP FAN/BLOWER COILS

A. Blower coil units all configurations
   1. Casing:
      a. Material: 18 gage steel.
      b. Finish: Shall be manufacturers.
   2. Cooling coils:
      a. Refrigerant type complete with expansion devices.
      b. Provide coils rated in accordance with ARI Standard 440.
         1. Materials: Seamless copper tubes with aluminum fins.
      c. Pressure test coil: Under water at 300 psi minimum.
   3. Fans:
      a. Centrifugal.
      b. Forward curved.
      c. Single width, double inlet.
   4. Fan motor:
      a. Open permanent split capacitor variable or multispeed type with gas graphite sintered bearings.
      b. Fans shall be high static pressure type where unit is attached to ductwork. Fan wheels shall be fiberglass reinforced plastic, steel or aluminum. Wheels shall be statically and dynamically balanced and be keyed to the motor shaft.
   5. Fan access:
      a. Provide access to fan for maintenance.
      b. Provide path for removal of fan without disturbing duct or unit installation.

6. Configuration shall be vertical.
7. Control package shall include fan contactor, 24 volt transformer, control barrier strip.
8. Thermostat shall be the same type and appearance supplied with furnaces with heat pump operation only. Humidity and CO_2 functions shall be as noted in Section 235400.
9. Do not supply electric resistance heat.
10. Filters shall be as specified for furnaces.
11. Mixing boxes shall be like those specified for gas furnaces.

Part 3 - EXECUTION

3.01 EXAMINATION

A. Verification of Conditions:
   1. Verify that all products conform to regulatory and specification requirements.

B. Verify locations of equipment by field measurements to determine locations of rough-in connections.

C. Examine branch circuit wiring to verify suitability.

D. Examine areas and conditions under which equipment is to be installed. Correct any unsatisfactory conditions before installing equipment.

3.02 PREPARATION

A. Protect surrounding elements from damage or disfigurement resulting from work of this section.

B. Surface Preparation:
   1. Clean surfaces to receive work.

3.03 INSTALLATION

A. Install in accordance with manufacturer's instructions.

B. Install in conformance with ARI 435.

C. Mount level and true per details. Mount such that equipment can be serviced without removing duct and equipment.

D. Coils shall be piped such that connections can be unmade. Pipe in accord to manufacturer’s instruct.

E. Cap unused drain pan connections.

F. Seal all air leaks in casings.

3.04 FIELD QUALITY CONTROL

A. Manufacturer’s Field Service: Manufacturer shall furnish a trained representative to supervise startup.

B. Operational training shall include, but is not limited to, the following:
   1. Equipment start-up.
   2. Equipment shutdown.
   3. Troubleshooting procedures.
   4. Servicing requirements.
   5. Preventative maintenance schedules and procedures.

3.05 ADJUSTING

A. Verify proper rotation of all fans.

B. Leak test equipment connected to duct which requires leakage testing.
   1. Test pressure: Equal to static pressure class of connected duct.
   2. Seal all leaks.

C. Operate the equipment for the test and balance work.

3.06 DEMONSTRATION AND COMMISSIONING

A. Commission in manner similar to that described for gas furnaces.

B. Train Owner’s rep in manner like that for furnaces.

END OF SECTION 237313

SECTION 238126 – SPLIT SYSTEM AIR CONDITIONERS

PART 1 - GENERAL

1.01 WORK INCLUDES

A. Base Bid:
1. Heating (HVAC) Contractor Provide:
   a. Refrigerant suction and liquid pipe and accessories.
   b. Ductless air-conditioning heat pump unit and control, including fan coil and air-cooled condensing unit.
   c. Condensate drain piping.
   d. Inspection of existing units.

1.02 RELATED WORK

A. Specified Elsewhere:
1. 230710 – HVAC Pipe Insulation.

1.03 REFERENCES

A. ANSI/ASHRAE 15 - Safety Code for Mechanical Refrigeration.

B. ANSI/ASHRAE 90A - 2007 - Energy Conservation in new Building Design. (Except Low Rise Residential Buildings)

C. UL 1995 - Central Cooling Air Conditioners.

1.04 DESCRIPTION

A. Definitions:
1. HVAC Contractor = Heating Contractor = Heating Subcontractor for this work.

1.05 QUALIFICATIONS

A. For Work with Refrigerant:
1. Workers shall be certified in accord to the US EPA Refrigerant Certification Program.
2. Technicians shall be employed by a service company regularly engaged for refrigeration service work.

1.06 SUBMITTALS

A. Submit shop drawings under provisions of Section 013300.

B. Submit manufacturer’s standard drawings indicating components, assembly, dimensions, weights and loadings, required clearances, and location and size of field connections. Include schematic layouts showing condensing units, cooling coils, refrigerant piping, and accessories required for complete system. Include electric power and control schematics, control schematics shall include air flow switches and solenoid valves.

C. Submit product data indicating rated capacities, operating characteristics, weights specialties and accessories, electrical nameplate data, and wiring diagrams.

D. Submit copy of US EPA Refrigerant Certification Program Certificates for actually performing refrigeration work.

E. Submit line item price for ductless split system units on Schedule of Values. Identify supplier vendor.

1.07 OPERATION AND MAINTENANCE DATA

A. Submit operation and maintenance data under provisions of Section 017823.

B. Include start-up instructions, maintenance instructions, parts lists, controls, and accessories.

1.08 DELIVERY, STORAGE, AND HANDLING

A. Deliver products to site under provisions of Section 016000.

B. Comply with manufacturer's installation instructions for rigging, unloading, and transporting units.

C. Protect units on site from physical damage. Protect coils.

1.09 WARRANTY

A. Provide one year parts and labor warranty for air cooled condensing units and fan coil units.

B. Provide a five year extended parts only warranty for compressors.

PART 2 - PRODUCTS

2.01 MANUFACTURER & PERFORMANCE

A. Unless otherwise specified the manufacturer’s number specified or scheduled is listed merely as an aid to prospective bidders. In most cases it is an incomplete number and relies upon the written description to fully define the item. Where model numbers define a single manufactured item which does not include the items include in the written description, the model number shall be modified as required to most closely meet the described requirements.

2.02 MANUFACTURERS

A. See Schedule on Drawings.

2.03 AIR COOLED COMPRESSOR CONDENSING/HEAT PUMP UNITS

A. Units: Self-contained, packaged, factory assembled and pre-wired units suitable for outdoor use consisting of cabinet, compressors, condensing coil and fans, integral sub-cooling coil, controls, liquid receiver, and inlet and outlet screens.

B. Construction and Ratings: In accordance with ARI 210/240. Testing shall be in accordance with ASHRAE 14.

C. See Schedule on Drawings for performance requirements.

D. House components in welded steel frame with galvanized steel panels with weather resistant, baked enamel finish.

E. Mount contactors, and controls in weatherproof panel provided with removable access doors.

F. Coils: Aluminum fins mechanically bonded to seamless copper tubing. Provide sub-cooling circuits. Air test under water to 425 psig, and dehydrate. Seal with holding charge of nitrogen or refrigerant.

G. Coil Guard: Shall be Expanded metal, Louvered, or PVC coated steel wire.

H. Fans and Motors:
1. Horizontal discharge direct driven propeller type condenser fans with fan guard on discharge. Propeller shall be statically and dynamically balanced, and keyed to motor shaft.
2. Weatherproof motors suitable for outdoor use, single phase permanent split capacitor type, with permanent lubricated ball bearings and built in current and thermal overload protection. Fan Motor shall be mounted to unit frame with spider braces.

I. Compressors:
1. Shall be rotary type with built-in thermostatic electric over current protection and starting capacitor.
2. crank case heater.
3. Shall have sound insulating hood.
4. Shall be rated for continuous cooling operation down to 35 degrees F, and heating operation between 65 degrees F and 0 degrees F.
5. Shall be mounted on rubber in shear dampening vibration isolators.

J. Refrigerant Circuit:
1. Provide compressors with refrigerant circuits, factory supplied and piped.
2. Provide filter dryer, liquid line sight glass, and moisture indicator, suction and liquid line service valves, and gage ports around each compressor.
3. Unit shall operate with refrigerant R-410A.

K. Controls and Electrical Connections:
1. Shall be in weatherproof steel enclosure, containing power and control wiring, factory wired with single point power connection.
2. Provide contractor Anti-short cycle timer, speed controls. Provide manual reset current overload protection. For each condenser fan, provide starter relay.
3. Provide the following safety controls arranged so that operating any one will shut down machine and require manual reset:
   a. High discharge pressure switch manual reset for each compressor.
   b. Low suction pressure switch automatic reset for each compressor.
4. Provide the following controls:
   a. Thermostat located in room. It shall cycle compressors, and activates solenoid valves in refrigerant circuit.
   b. Periodic pump-out timer to pump down on high evaporator refrigerant pressure.
   c. Low ambient temperature controls down to 35 degrees F.
   d. Remote control shall be programmable type. It shall regulate temperature and time. It shall cycle compressors.
   e. Three minute “off” timer prevents compressor from short cycling.

2.04 PIPE & SPECIALTIES

A. Pipe:
1. Shall be rigid cooper ACR tubing complying with ASTM B280.
2. Fittings shall wrought copper type complying with ASME B16.22.
3. Joints shall be made with brazing alloy with melting range of 1190 to 1480 degrees F.

B. Condensate Drain Pipe:

1. Shall be Type M rigid or annealed copper tube, as required complying with ASTM B-88. Fittings shall be wrought copper sweat type. Solder shall be lead-free.

C. Moisture Indicators:
1. Shall be copper or brass boded with solder ends, rated for 430 psig.
2. Shall include sight glass and color coded indicator.
3. Shall have reusable plastic cap.

D. Filter Dryer:
1. Shall be steel canister type with solder connections complying with ARI 710.
2. Shall include desiccant filter core.
3. Shall have rating to match compressor-condensing unit capacity.

E. Charging Valves:
1. Shall have brass caps and removable valve core with integral ball check.
2. Shall have forged brass body with solder connection.

2.05 DUCTLESS FAN COIL

A. Configuration shall:
1. Be under ceiling mount configuration.
2. Be rectangular in shape with long width, shallow depth and short height.
3. Have end mounted motorized discharge grille and filtered upper intake grille.

B. Casing shall be high impact plastic or powder coated extruded aluminum. Frame shall be steel with integral mounting points.

C. Fans shall be forward curved double width, double inlet wheels. These shall be keyed directly to 3-speed 120 volt motor.

D. Filter shall be washable type.

E. Drain shall be pipe nipple from insulated drain pan.

F. Controls shall be 24 or 12 volt complete with barrier strips and transformer, relays for connection of DDC system specified in Section 230900.

G. Provide accessory condensate drain pump capable of moving 1 GPH at 20’ lift. Pump shall be suitable for remote mounting and include a control for locking out power to fan coil in case of pump failure.

2.06 ACCEPTABLE PRODUCTS (See Drawing Schedules.)

PART 3 - EXECUTION

3.01 INSTALLATION

A. Install in accordance with manufacturer's instructions.

B. Provide connection to refrigeration piping system and evaporators. Comply with ANSI/ASHRAE 15. Mount thermostat 4'-6" above floor at location shown on the Drawings.

C. Install units on concrete pads or curbs in accord to Section 230529. Mount to pad on neoprene isolator pads. Level units by shimming neoprene pads. Provide at least two concrete anchors and threaded rod through neoprene pad on diagonal points. Anchor units to pads with at least one anchor per unit. Mount units to curbs in accord to drawing detail.

D. Piping:
1. Route substantially as shown on the drawings.
2. Minimize use of 90 degree changes in direction. Do not field bend rigid pipe. Where required make changes in direction with long radius elbows or with 45 degree elbows.
3. Secure piping to structure. Isolate copper pipe from steel hangers.
4. Insulate suction piping in accord to Section 230710. Allow room to accommodate insulation.
5. Bundle liquid piping together with suction piping when sizes are 0.5″ diameter or less. Use nylon draw-bands.
6. Secure vertical piping to walls with strut hangers per Section 230529.
7. Locate liquid line dryers and site glasses adjacent to the compressor condenser units.
8. Joints shall be made with foss brazing or silver solder. Flood piping with dry nitrogen during brazing or soldering process.
9. Flush assembled piping systems with dry nitrogen and evacuate fully before charging.

E. Condensate Drain Piping:
1. Shall pitch at no less than 1/8″ in 2′. Upstream of pump.
2. Locate pump tight to unit.
3. Use annealed pipe on discharge of pump. Route through roof or wall penetration as noted.

F. Commissioning:
1. Shall be completed by factory trained personnel.

3.02 MANUFACTURER'S FIELD SERVICES

A. Shall be performed by factory trained service personnel. Contractors personnel and manufacturers representatives are acceptable if they can provide official proof of training.

B. Provide initial and cooling season start-up, and winter season shut down during first year of operation, including routine servicing and check out.

C. Supply initial charge of refrigerant and oil for each refrigerant circuit. Replace losses of refrigerant and oil.

D. Inspect and test for refrigerant leaks at the end of the first cooling season. Repair leaks found, and replace refrigerant.

3.03 SCHEDULES: See Drawings.

END OF SECTION 238126

PART 1 - GENERAL

1.1 SUMMARY

A. Section Includes:
1. Electrical equipment coordination and installation.
2. Sleeves for raceways and cables.
3. Grout.
4. Common electrical installation requirements.

1.2 DEFINITIONS

A. EPDM: Ethylene-propylene-diene terpolymer rubber.

B. NBR: Acrylonitrile-butadiene rubber.

1.3 COORDINATION

A. Coordinate arrangement, mounting, and support of electrical equipment:
1. To allow maximum possible headroom unless specific mounting heights that reduce headroom are indicated.
2. To provide for ease of disconnecting the equipment with minimum interference to other installations.
3. To allow right of way for piping and conduit installed at required slope.
4. So connecting raceways, cables and wireways will be clear of obstructions and of the working and access space of other equipment.

B. Coordinate installation of required supporting devices and set sleeves in cast-in-place concrete, masonry walls, and other structural components as they are constructed.

C. Coordinate location of access panels and doors for electrical items that are behind finished surfaces or otherwise concealed.

D. Coordinate sleeve selection and application with selection and application of firestopping.

PART 2 - PRODUCTS

2.1 SLEEVES FOR RACEWAYS AND CABLES

A. Steel Pipe Sleeves: ASTM A 53/A 53M, Type E, Grade B, Schedule 40, galvanized steel, plain ends.

2.2 GROUT

A. Nonmetallic, Shrinkage-Resistant Grout: ASTM C 1107, factory-packaged, nonmetallic aggregate grout, noncorrosive, nonstaining, mixed with water to consistency suitable for application and a 30-minute working time.

PART 3 - EXECUTION

3.1 COMMON REQUIREMENTS FOR ELECTRICAL INSTALLATION

A. Comply with NECA 1.

B. Measure indicated mounting heights to bottom of unit for suspended items and to center of unit for wall-mounting items.

C. Headroom Maintenance: If mounting heights or other location criteria are not indicated, arrange and install components and equipment to provide maximum possible headroom consistent with these requirements.

D. Equipment: Install to facilitate service, maintenance, and repair or replacement of components of both electrical equipment and other nearby installations. Connect in such a way as to facilitate future disconnecting with minimum interference with other items in the vicinity.

E. Right of Way: Give to piping systems installed at a required slope.

3.2 SLEEVE INSTALLATION FOR ELECTRICAL PENETRATIONS

A. Electrical penetrations occur when raceways, cables and wireways penetrate concrete slabs, concrete or masonry walls, or fire-rated floor and wall assemblies.

B. Concrete Slabs and Walls: Install sleeves for penetrations unless core-drilled holes or formed openings are used. Install sleeves during erection of slabs and walls.

C. Use pipe sleeves unless penetration arrangement requires rectangular sleeved opening.

D. Fire-Rated Assemblies: Install sleeves for penetrations of fire-rated floor and wall assemblies unless openings compatible with firestop system used are fabricated during construction of floor or wall.

E. Cut sleeves to length for mounting flush with both surfaces of walls.

F. Extend sleeves installed in floors 2 inches above finished floor level.

G. Size pipe sleeves to provide 1/4-inch annular clear space between sleeve and raceway or cable, unless indicated otherwise.

H. Seal space outside of sleeves with grout for penetrations of concrete and masonry
   1. Promptly pack grout solidly between sleeve and wall so no voids remain. Tool exposed surfaces smooth; protect grout while curing.

I. Interior Penetrations of Non-Fire-Rated Walls and Floors: Seal annular space between sleeve and raceway or cable, using joint sealant appropriate for size, depth, and location of joint.

J. Fire-Rated-Assembly Penetrations: Maintain indicated fire rating of walls, partitions, ceilings, and floors at raceway and cable penetrations. Install sleeves and seal raceway and cable penetration sleeves with firestop materials.

K. Roof-Penetration Sleeves: Seal penetration of individual raceways and cables with flexible boot-type flashing units applied in coordination with roofing work.

L. Aboveground, Exterior-Wall Penetrations: Seal penetrations using steel pipe sleeves and mechanical sleeve seals. Select sleeve size to allow for 1-inch annular clear space between pipe and sleeve for installing mechanical sleeve seals.

M. Underground, Exterior-Wall Penetrations: Install cast-iron pipe sleeves. Size sleeves to allow for 1-inch annular clear space between raceway or cable and sleeve for installing mechanical sleeve seals.

3.3 FIRESTOPPING

A. Apply firestopping to penetrations of fire-rated floor and wall assemblies for electrical installations to restore original fire-resistance rating of assembly.

END OF SECTION 260500

PART 1 - GENERAL

1.1 SUMMARY

A. This Section includes the following:
   1. Building wires and cables rated 600 V and less.
   2. Connectors, splices, and terminations rated 600 V and less.

1.2 DEFINITIONS

A. EPDM: Ethylene-propylene-diene terpolymer rubber.

B. NBR: Acrylonitrile-butadiene rubber.

1.3 SUBMITTALS

A. Product Data: For each type of product indicated.

B. Qualification Data: For testing agency.

C. Field quality-control test reports.

1.4 QUALITY ASSURANCE

A. Electrical Components, Devices, and Accessories: Listed and labeled as defined in NFPA 70, Article 100, by a testing agency acceptable to authorities having jurisdiction, and marked for intended use.

B. Comply with NFPA 70.

1.5 COORDINATION

A. Set sleeves in cast-in-place concrete, masonry walls, and other structural components as they are constructed.

PART 2 - PRODUCTS

2.1 CONDUCTORS AND CABLES

A. Available Manufacturers: Subject to compliance with requirements, manufacturers offering products that may be incorporated into the Work include, but are not limited to, the following:

B. Manufacturers: Subject to compliance with requirements, provide products by one of the following:

1. Alcan Products Corporation; Alcan Cable Division.
2. American Insulated Wire Corp.; a Leviton Company.
3. General Cable Corporation.
4. Senator Wire & Cable Company.
5. Southwire Company.

C. Copper Conductors: Comply with NEMA WC 70.

D. Conductor Insulation: Comply with NEMA WC 70 for Types THHN-THWN.

E. Multiconductor Cable: Not permissible for use.

2.2 CONNECTORS AND SPLICES

A. Available Manufacturers: Subject to compliance with requirements, manufacturers offering products that may be incorporated into the Work include, but are not limited to, the following:

B. Manufacturers: Subject to compliance with requirements, provide products by one of the following:
1. AFC Cable Systems, Inc.
2. Hubbell Power Systems, Inc.
3. O-Z/Gedney; EGS Electrical Group LLC.
4. 3M; Electrical Products Division.
5. Tyco Electronics Corp.

C. Description: Factory-fabricated connectors and splices of size, ampacity rating, material, type, and class for application and service indicated.

PART 3 - EXECUTION

3.1 CONDUCTOR MATERIAL APPLICATIONS

A. Feeders: Copper. Stranded for all conductors.

B. Branch Circuits: Copper. Stranded for all conductors.

3.2 CONDUCTOR INSULATION, APPLICATIONS AND WIRING METHODS

A. Service Entrance: Type THHN-THWN, single conductors in raceway.

B. Exposed Feeders: Type THHN-THWN, single conductors in raceway.

C. Feeders Concealed in Ceilings, Walls, Partitions, and Crawlspaces: Type THHN-THWN, single conductors in raceway.

D. Feeders Below Slabs-on-Grade, and Underground: Type THHN-THWN, single conductors in raceway.

E. Exposed Branch Circuits: Type THHN-THWN, single conductors in raceway.

F. Branch Circuits Concealed in Ceilings, Walls, and Partitions: Type THHN-THWN, single conductors in raceway. Metal-clad cable, Type MC cable is not allowed.

G. Branch Circuits Below Slabs-on-Grade, and Underground: Type THHN-THWN, single conductors in raceway.

H. Cord Drops and Portable Appliance Connections: Type SO, hard service cord with stainless-steel, wire-mesh, strain relief device at terminations to suit application.

I. Class 1 Control Circuits: Type THHN-THWN, in raceway.

J. Class 2 Control Circuits: Type THHN-THWN, in raceway.

3.3 INSTALLATION OF CONDUCTORS AND CABLES

A. Conceal cables in finished walls, ceilings, and floors, unless otherwise indicated.

B. Use manufacturer-approved pulling compound or lubricant where necessary; compound used must not deteriorate conductor or insulation. Do not exceed manufacturer's recommended maximum pulling tensions and sidewall pressure values.

C. Use pulling means, including fish tape, cable, rope, and basket-weave wire/cable grips, that will not damage cables or raceway.

3.4 CONNECTIONS

A. Tighten electrical connectors and terminals according to manufacturer's published torque-tightening values. If manufacturer's torque values are not indicated, use those specified in UL 486A and UL 486B.

B. Make splices and taps that are compatible with conductor material and that possess equivalent or better mechanical strength and insulation ratings than unspliced conductors.
   1. Use oxide inhibitor in each splice and tap conductor for aluminum conductors.

C. Wiring at Outlets: Install conductor at each outlet, with at least 6 inches of slack.

3.5 FIELD QUALITY CONTROL

A. Tests and Inspections:

1. Perform each visual and mechanical inspection and electrical test stated in NETA Acceptance Testing Specification. Certify compliance with test parameters.

B. Test Reports: Prepare a written report to record the following:
   1. Test procedures used.
   2. Test results that comply with requirements.
   3. Test results that do not comply with requirements and corrective action taken to achieve compliance with requirements.

C. Remove and replace malfunctioning units and retest as specified above.

END OF SECTION 260519

PART 1 - GENERAL

1.1 SUMMARY

A. Section Includes:
1. Low-voltage control cabling.
2. Control-circuit conductors.
3. Identification products.

1.2 DEFINITIONS

A. EMI: Electromagnetic interference.

B. IDC: Insulation displacement connector.

C. Low Voltage: As defined in NFPA 70 for circuits and equipment operating at less than 50 V or for remote-control and signaling power-limited circuits.

D. Open Cabling: Passing telecommunications cabling through open space (e.g., between the studs of a wall cavity).

1.3 QUALITY ASSURANCE

A. Surface-Burning Characteristics: As determined by testing identical products according to ASTM E 84 by a qualified testing agency. Identify products with appropriate markings of applicable testing agency.
1. Flame-Spread Index: 25 or less.
2. Smoke-Developed Index: 50 or less.

B. Electrical Components, Devices, and Accessories: Listed and labeled as defined in NFPA 70, by a qualified testing agency, and marked for intended location and application.

1.4 DELIVERY, STORAGE, AND HANDLING

A. Test cables upon receipt at Project site.
1. Test each low voltage cable for open and short circuits.

1.5 PROJECT CONDITIONS

A. Environmental Limitations: Do not deliver or install cables and connecting materials until wet work in spaces is complete and dry, and temporary HVAC system is operating and maintaining ambient temperature and humidity conditions at occupancy levels during the remainder of the construction period.

PART 2 - PRODUCTS

2.1 PATHWAYS

A. Support of Open Cabling: UL labeled for support of cabling, designed to prevent degradation of cable performance and pinch points that could damage cable.

B. Conduit and Boxes: Comply with requirements in Division 26 Section "Raceway and Boxes for Electrical Systems." Flexible metal conduit shall not be used.
   1. Outlet boxes shall be no smaller than 4-11/16 inches square, and 2-1/2 inches deep.

2.2 BACKBOARDS

A. Description: Plywood, fire-retardant treated, 3/4 by 48 by 96 inches.

2.3 LOW-VOLTAGE CONTROL CABLE

A. Plenum-Rated, Paired Cable: NFPA 70, Type CMP.
   1. Size and configuration as recommended by the manufacturer.
   2. PVC insulation.
   3. PVC jacket.
   4. Flame Resistance: Comply with NFPA 262.
   5. All cabling shall be furnished and installed per equipment manufacturer’s recommendations.

2.4 CONTROL-CIRCUIT CONDUCTORS

A. Class 1 Control Circuits: Stranded copper, Type THHN-THWN, in raceway, complying with UL 83.

B. Class 2 Control Circuits: Stranded copper, Type THHN-THWN, in raceway or power-limited cable, concealed in building finishes, complying with UL 83.

C. Class 3 Remote-Control and Signal Circuits: Stranded copper, Type TW or Type TF, complying with UL 83.

2.5 IDENTIFICATION PRODUCTS

A. Manufacturers: Subject to compliance with requirements, provide products by one of the following available manufacturers offering products that may be incorporated into the Work include, but are not limited to, the following:
   1. Brady Corporation.
   2. HellermannTyton.
   3. Kroy LLC.

4. Panduit Corp.

B. Comply with UL 969 for a system of labeling materials, including label stocks, laminating adhesives, and inks used by label printers.

PART 3 - EXECUTION

3.1 INSTALLATION OF PATHWAYS

A. Install manufactured conduit sweeps and long-radius elbows if possible.

B. Pathway Installation in Equipment Rooms:
1. Position conduit ends adjacent to a corner on backboard if a single piece of plywood is installed or in the corner of room if multiple sheets of plywood are installed around perimeter walls of room.
2. Secure conduits to backboard if entering room from overhead.
3. Extend conduits 3 inches above finished floor.
4. Install metal conduits with grounding bushings and connect with grounding conductor to grounding system.

C. Backboards: Install backboards with 96-inch dimension vertical. Butt adjacent sheets tightly and form smooth gap-free corners and joints.

3.2 INSTALLATION OF CONDUCTORS AND CABLES

A. Comply with NECA 1.

B. General Requirements for Cabling:
1. Terminate all conductors; no cable shall contain unterminated elements. Make terminations only at indicated outlets and terminals.
2. Cables may not be spliced. Secure and support cables at intervals not exceeding 60 inches and not more than 6 inches from cabinets, boxes, fittings, outlets, racks, frames, and terminals.
3. Bundle, lace, and train conductors to terminal points without exceeding manufacturer's limitations on bending radii.
4. Do not install bruised, kinked, scored, deformed, or abraded cable. Remove and discard cable if damaged during installation and replace it with new cable.
5. Pulling Cable: Comply with BICSI ITSIM, Ch. 4, "Pulling Cable." Monitor cable pull tensions.

C. Installation of Control-Circuit Conductors:
1. Install wiring in raceways. Comply with requirements specified in Division 26 Section "Raceway and Boxes for Electrical Systems."

D. Open-Cable Installation:

1. Install cabling with horizontal and vertical cable guides in telecommunications spaces with terminating hardware and interconnection equipment.
2. Suspend copper cable not in a wireway or pathway a minimum of 8 inches above ceilings by cable supports not more than 60 inches apart.
3. Cable shall not be run through structural members or in contact with pipes, ducts, or other potentially damaging items.

E. Separation from EMI Sources:
1. Separation between open communications cables or cables in nonmetallic raceways and unshielded power conductors and electrical equipment shall be as follows:
   a. Electrical Equipment Rating Less Than 2 kVA: A minimum of 5 inches.
   b. Electrical Equipment Rating between 2 and 5 kVA: A minimum of 12 inches.
   c. Electrical Equipment Rating More Than 5 kVA: A minimum of 24 inches.
2. Separation between communications cables in grounded metallic raceways and unshielded power lines or electrical equipment shall be as follows:
   a. Electrical Equipment Rating Less Than 2 kVA: A minimum of 2-1/2 inches.
   b. Electrical Equipment Rating between 2 and 5 kVA: A minimum of 6 inches.
   c. Electrical Equipment Rating More Than 5 kVA: A minimum of 12 inches.
3. Separation between communications cables in grounded metallic raceways and power lines and electrical equipment located in grounded metallic conduits or enclosures shall be as follows:
   a. Electrical Equipment Rating Less Than 2 kVA: No requirement.
   b. Electrical Equipment Rating between 2 and 5 kVA: A minimum of 3 inches.
   c. Electrical Equipment Rating More Than 5 kVA: A minimum of 6 inches.
4. Separation between Cables and Electrical Motors and Transformers, 5 kVA or HP and Larger: A minimum of 48 inches.
5. Separation between Cables and Fluorescent Fixtures: A minimum of 5 inches.

3.3 CONTROL-CIRCUIT CONDUCTORS

A. Minimum Conductor Sizes:
1. Class 1 remote-control and signal circuits, No 14 AWG.
2. Class 2 low-energy, remote-control, and signal circuits, No. 16 AWG.
3. Class 3 low-energy, remote-control, alarm, and signal circuits, No 12 AWG.
4. Minimum sizes may be modified if manufacturer’s recommendations are different.

3.4 FIELD QUALITY CONTROL

A. Perform tests and inspections.

B. Tests and Inspections:
   1. Visually inspect cable placement, cable termination, grounding and bonding, equipment and labeling of all components.

C. End-to-end cabling will be considered defective if it does not pass tests and inspections.

D. Prepare test and inspection reports.

END OF SECTION 260523

PART 1 - GENERAL

1.1 SUMMARY

A. This Section includes methods and materials for grounding systems and equipment.

1.2 SUBMITTALS

A. Product Data: For each type of product indicated.

B. Operation and Maintenance Data: For grounding to include the following in emergency, operation, and maintenance manuals:
   1. Instructions for periodic testing and inspection of grounding features at ground rings and grounding connections for separately derived systems based on NETA MTS and NFPA 70B.
      a. Tests shall be to determine if ground resistance or impedance values remain within specified maximums, and instructions shall recommend corrective action if they do not.
      b. Include recommended testing intervals.

1.3 QUALITY ASSURANCE

A. Electrical Components, Devices, and Accessories: Listed and labeled as defined in NFPA 70, Article 100, by a testing agency acceptable to authorities having jurisdiction, and marked for intended use.

B. Comply with UL 467 for grounding and bonding materials and equipment.

PART 2 - PRODUCTS

2.1 CONDUCTORS

A. Insulated Conductors: Copper or tinned-copper wire or cable insulated for 600 V unless otherwise required by applicable Code or authorities having jurisdiction.

B. Bare Copper Conductors:
   1. Solid Conductors: ASTM B 3.
   2. Stranded Conductors: ASTM B 8.
   3. Bonding Cable: 28 kcmil, 14 strands of No. 17 AWG conductor, 1/4 inch in diameter.
   4. Bonding Conductor: No. 4 or No. 6 AWG, stranded conductor.
   5. Bonding Jumper: Copper tape, braided conductors, terminated with copper ferrules; 1-5/8 inches wide and 1/16 inch thick.
   6. Tinned Bonding Jumper: Tinned-copper tape, braided conductors, terminated with copper ferrules; 1-5/8 inches wide and 1/16 inch thick.

2.2 CONNECTORS

A. Listed and labeled by a nationally recognized testing laboratory acceptable to authorities having jurisdiction for applications in which used, and for specific types, sizes, and combinations of conductors and other items connected.

B. Bolted Connectors for Conductors and Pipes: Copper or copper alloy, bolted pressure-type, with at least two bolts.
   1. Pipe Connectors: Clamp type, sized for pipe.

C. Welded Connectors: Exothermic-welding kits of types recommended by kit manufacturer for materials being joined and installation conditions.

D. UL Listed compression connection is acceptable.

2.3 GROUNDING ELECTRODES

A. Ground Rods: Copper-clad steel; 10’ by ¾” inches in diameter.

PART 3 - EXECUTION

3.1 APPLICATIONS

A. Conductors: Install stranded conductors unless otherwise indicated.

B. Underground Grounding Conductors: Install bare tinned-copper conductor, No. 3/0 AWG minimum.
   1. Bury at least 24 inches below grade.

C. Conductor Terminations and Connections:
   1. Pipe and Equipment Grounding Conductor Terminations: Bolted or one-shot compression connectors.
   2. Underground Connections: Welded or one-shot compression connectors.
   3. Connections to Structural Steel: Welded or one-shot compression connectors.

3.2 EQUIPMENT GROUNDING

A. Install insulated equipment grounding conductors with all feeders and branch circuits.

B. Install insulated equipment grounding conductors with the following items, in addition to those required by NFPA 70:
   1. Feeders and branch circuits.
   2. Lighting circuits.
   3. Receptacle circuits.
   4. Single-phase motor and appliance branch circuits.
   5. Three-phase motor and appliance branch circuits.

6. Flexible raceway runs.
7. Rack-Mounted Electronic Equipment Circuits: Install insulated equipment grounding conductor in branch-circuit runs from equipment-area power panels and power-distribution units.

C. Signal and Communication Equipment: For telephone, alarm, voice and data, and other communication equipment, provide No. 4 AWG minimum insulated grounding conductor in raceway from grounding electrode system to each service location, terminal cabinet, wiring closet, and central equipment location.
1. Service and Central Equipment Locations and Wiring Closets: Terminate grounding conductor on a 1/4-by-2-by-12-inch grounding bus.
2. Terminal Cabinets: Terminate grounding conductor on cabinet grounding terminal.

3.3 INSTALLATION

A. Grounding Conductors: Route along shortest and straightest paths possible, unless otherwise indicated or required by Code. Avoid obstructing access or placing conductors where they may be subjected to strain, impact, or damage.

B. Ground Rods: Drive rods until tops are 24 inches below finished floor or final grade, unless otherwise indicated.
1. Interconnect ground rods with grounding electrode conductor below grade and as otherwise indicated. Make connections without exposing steel or damaging coating, if any.
2. For grounding electrode system, install at least three rods spaced at least one-rod length from each other and located at least the same distance from other grounding electrodes, and connect to the service grounding electrode conductor.

C. Bonding Straps and Jumpers: Install in locations accessible for inspection and maintenance, except where routed through short lengths of conduit.
1. Bonding to Structure: Bond straps directly to basic structure, taking care not to penetrate any adjacent parts.
2. Bonding to Equipment Mounted on Vibration Isolation Hangers and Supports: Install so vibration is not transmitted to rigidly mounted equipment.
3. Use exothermic-welded or one-shot compression connectors for outdoor locations, but if a disconnect-type connection is required, use a bolted clamp.

D. Grounding and Bonding for Piping:
1. Metal Water Service Pipe: Install insulated copper grounding conductors, in conduit, from building's main service equipment, or grounding bus, to main metal water service entrances to building. Connect grounding conductors to main metal water service pipes, using a bolted clamp connector or by bolting a lug-type connector to a pipe flange, using one of the lug bolts of the flange. Where a dielectric main water fitting is installed, connect grounding conductor on street side of fitting.

Bond metal grounding conductor conduit or sleeve to conductor at each end.

2. Water Meter Piping: Use braided-type bonding jumpers to electrically bypass water meters. Connect to pipe with a bolted connector.
3. Bond each aboveground portion of gas piping system downstream from equipment shutoff valve.

E. Bonding Interior Metal Ducts: Bond metal air ducts to equipment grounding conductors of associated fans, blowers, electric heaters, and air cleaners. Install bonding jumper to bond across flexible duct connections to achieve continuity.

3.4 FIELD QUALITY CONTROL

A. Perform the following tests and inspections and prepare test reports:
1. After installing grounding system but before permanent electrical circuits have been energized, test for compliance with requirements.
2. Test completed grounding system at each location where a maximum ground-resistance level is specified, at service disconnect enclosure grounding terminal, and at individual ground rods. Make tests at ground rods before any conductors are connected.
   a. Measure ground resistance not less than two full days after last trace of precipitation and without soil being moistened by any means other than natural drainage or seepage and without chemical treatment or other artificial means of reducing natural ground resistance.
   b. Perform tests by fall-of-potential method according to IEEE 81.
3. Prepare dimensioned drawings locating each ground rod and ground rod assembly, and other grounding electrodes. Identify each by letter in alphabetical order, and key to the record of tests and observations. Include the number of rods driven and their depth at each location, and include observations of weather and other phenomena that may affect test results. Describe measures taken to improve test results.

B. Report measured ground resistances that exceed the following values:
1. Power and Lighting Equipment or System with Capacity 500 kVA and Less: 5 ohms.

C. Excessive Ground Resistance: If resistance to ground exceeds specified values, notify Architect promptly and include recommendations to reduce ground resistance.

END OF SECTION 260526

PART 1 - GENERAL

1.1 SUMMARY

A. This Section includes the following:
   1. Hangers and supports for electrical equipment and systems.
   2. Construction requirements for concrete bases.

1.2 DEFINITIONS

A. EMT: Electrical metallic tubing.

B. IMC: Intermediate metal conduit.

C. RMC: Rigid metal conduit.

1.3 PERFORMANCE REQUIREMENTS

A. Design supports for multiple raceways capable of supporting combined weight of supported systems and its contents.

B. Design equipment supports capable of supporting combined operating weight of supported equipment and connected systems and components.

C. Rated Strength: Adequate in tension, shear, and pullout force to resist maximum loads calculated or imposed for this Project, with a minimum structural safety factor of five times the applied force.

1.4 SUBMITTALS

A. Product Data: For the following:
   1. Steel slotted support systems.

1.5 QUALITY ASSURANCE

A. Welding: Qualify procedures and personnel according to AWS D1.1/D1.1M, "Structural Welding Code - Steel."

B. Comply with NFPA 70.

1.6 COORDINATION

A. Coordinate size and location of concrete bases. Cast anchor-bolt inserts into bases.

B. Coordinate installation of roof curbs, equipment supports, and roof penetrations.

PART 2 - PRODUCTS

2.1 SUPPORT, ANCHORAGE, AND ATTACHMENT COMPONENTS

A. Steel Slotted Support Systems: Comply with MFMA-4, factory-fabricated components for field assembly.
   1. Available Manufacturers: Subject to compliance with requirements, manufacturers offering products that may be incorporated into the Work include, but are not limited to, the following:
   2. Manufacturers: Subject to compliance with requirements, provide products by one of the following:
      a. Allied Tube & Conduit.
      b. Cooper B-Line, Inc.; a division of Cooper Industries.
      c. ERICO International Corporation.
      d. GS Metals Corp.
      e. Thomas & Betts Corporation.
      f. Unistrut; Tyco International, Ltd.
      g. Wesanco, Inc.
   3. Metallic Coatings: Hot-dip galvanized after fabrication and applied according to MFMA-4.
   4. Painted Coatings: Manufacturer's standard painted coating applied according to MFMA-4.
   5. Channel Dimensions: Selected for applicable load criteria.

B. Raceway and Cable Supports: As described in NECA 1 and NECA 101.

C. Conduit and Cable Support Devices: Steel and malleable-iron hangers, clamps, and associated fittings, designed for types and sizes of raceway or cable to be supported.

D. Support for Conductors in Vertical Conduit: Factory-fabricated assembly consisting of threaded body and insulating wedging plug or plugs for non-armored electrical conductors or cables in riser conduits. Plugs shall have number, size, and shape of conductor gripping pieces as required to suit individual conductors or cables supported. Body shall be malleable iron.

E. Structural Steel for Fabricated Supports and Restraints: ASTM A 36/A 36M, steel plates, shapes, and bars; black and galvanized.

F. Mounting, Anchoring, and Attachment Components: Items for fastening electrical items or their supports to building surfaces include the following:
   1. Mechanical-Expansion Anchors: Insert-wedge-type, zinc-coated steel, for use in hardened portland cement concrete with tension, shear, and pullout capacities appropriate for supported loads and building materials in which used.
      a. Available Manufacturers: Subject to compliance with requirements, manufacturers offering products that may be

incorporated into the Work include, but are not limited to, the following:

b. Manufacturers: Subject to compliance with requirements, provide products by one of the following:
   1) Cooper B-Line, Inc.; a division of Cooper Industries.
   2) Empire Tool and Manufacturing Co., Inc.
   3) Hilti Inc.
   4) ITW Ramset/Red Head; a division of Illinois Tool Works, Inc.
   5) MKT Fastening, LLC.

2. Concrete Inserts: Steel or malleable-iron, slotted support system units similar to MSS Type 18; complying with MFMA-4 or MSS SP-58.
3. Clamps for Attachment to Steel Structural Elements: MSS SP-58, type suitable for attached structural element.
4. Through Bolts: Structural type, hex head, and high strength. Comply with ASTM A 325.
5. Toggle Bolts: All-steel springhead type.
6. Hanger Rods: Threaded steel.

2.2 FABRICATED METAL EQUIPMENT SUPPORT ASSEMBLIES

A. Description: Welded or bolted, structural-steel shapes, shop or field fabricated to fit dimensions of supported equipment.

PART 3 - EXECUTION

3.1 APPLICATION

A. Comply with NECA 1 and NECA 101 for application of hangers and supports for electrical equipment and systems except if requirements in this Section are stricter.

B. Maximum Support Spacing and Minimum Hanger Rod Size for Raceway: Space supports for EMT, IMC, and RMC as scheduled in NECA 1, where its Table 1 lists maximum spacings less than stated in NFPA 70. Minimum rod size shall be 1/4 inch in diameter.

C. Multiple Raceways or Cables: Install trapeze-type supports fabricated with steel slotted or other support system, sized so capacity can be increased by at least 25 percent in future without exceeding specified design load limits.
   1. Secure raceways and cables to these supports with two-bolt conduit clamps, single-bolt conduit clamps, or single-bolt conduit clamps using spring friction action for retention in support channel.

D. Spring-steel clamps designed for supporting single conduits without bolts may be used for 1-1/2-inch and smaller raceways serving branch circuits and communication systems above suspended ceilings and for fastening raceways to trapeze supports.

3.2 SUPPORT INSTALLATION

A. Comply with NECA 1 and NECA 101 for installation requirements except as specified in this Article.

B. Raceway Support Methods: In addition to methods described in NECA 1, EMT, IMC, and RMC may be supported by openings through structure members, as permitted in NFPA 70.

C. Strength of Support Assemblies: Where not indicated, select sizes of components so strength will be adequate to carry present and future static loads within specified loading limits. Minimum static design load used for strength determination shall be weight of supported components plus 200 lb.

D. Mounting and Anchorage of Surface-Mounted Equipment and Components: Anchor and fasten electrical items and their supports to building structural elements by the following methods unless otherwise indicated by code:
   1. To Wood: Fasten with lag screws or through bolts.
   2. To New Concrete: Bolt to concrete inserts.
   3. To Masonry: Approved toggle-type bolts on hollow masonry units and expansion anchor fasteners on solid masonry units.
   4. To Existing Concrete: Expansion anchor fasteners.
   5. To Steel: Welded threaded studs complying with AWS D1.1/D1.1M, with lock washers and nuts, Beam clamps (MSS Type 19, 21, 23, 25, or 27) complying with MSS SP-69, or Spring-tension clamps.
   6. To Light Steel: Sheet metal screws.
   7. Items Mounted on Hollow Walls and Nonstructural Building Surfaces: Mount cabinets, panelboards, disconnect switches, control enclosures, pull and junction boxes, transformers, and other devices on slotted-channel racks attached to substrate.

E. Drill holes for expansion anchors in concrete at locations and to depths that avoid reinforcing bars.

3.3 INSTALLATION OF FABRICATED METAL SUPPORTS

A. Cut, fit, and place miscellaneous metal supports accurately in location, alignment, and elevation to support and anchor electrical materials and equipment.

B. Field Welding: Comply with AWS D1.1/D1.1M.

3.4 CONCRETE BASES

A. Concrete bases shall be furnished and installed by the Electrical Contractor for all electrical items. Coordinate the exact location and dimensions of electrical equipment requiring concrete pads with the all trades.

3.5 PAINTING

A. Touchup: Clean field welds and abraded areas of shop paint. Paint exposed areas immediately after erecting hangers and supports. Use same materials as used for shop painting. Comply with SSPC-PA 1 requirements for touching up field-painted surfaces.
   1. Apply paint by brush or spray to provide minimum dry film thickness of 2.0 mils.

B. Touchup: Comply with requirements in painting Sections for cleaning and touchup painting of field welds, bolted connections, and abraded areas of shop paint on miscellaneous metal.

C. Galvanized Surfaces: Clean welds, bolted connections, and abraded areas and apply galvanizing-repair paint to comply with ASTM A 780.

END OF SECTION 260529

PART 1 - GENERAL

1.1 SUMMARY

A. This Section includes raceways, fittings, boxes, enclosures, and cabinets for electrical wiring.

1.2 DEFINITIONS

A. EMT: Electrical metallic tubing.

B. ENT: Electrical nonmetallic tubing.

C. EPDM: Ethylene-propylene-diene terpolymer rubber.

D. FMC: Flexible metal conduit.

E. IMC: Intermediate metal conduit.

F. LFMC: Liquidtight flexible metal conduit.

1.3 QUALITY ASSURANCE

A. Electrical Components, Devices, and Accessories: Listed and labeled as defined in NFPA 70, Article 100, by a testing agency acceptable to authorities having jurisdiction, and marked for intended use.

B. Comply with NFPA 70.

PART 2 - PRODUCTS

2.1 METAL CONDUIT AND TUBING

A. Available Manufacturers: Subject to compliance with requirements, manufacturers offering products that may be incorporated into the Work include, but are not limited to, the following:

B. Manufacturers: Subject to compliance with requirements, provide products by one of the following:
1. AFC Cable Systems, Inc.
2. Alflex Inc.
3. Allied Tube & Conduit; a Tyco International Ltd. Co.
4. Anamet Electrical, Inc.; Anaconda Metal Hose.
5. Electri-Flex Co.
6. O-Z Gedney; a unit of General Signal.

C. Rigid Steel Conduit: ANSI C80.1.

D. IMC: ANSI C80.6.

E. EMT: ANSI C80.3.

F. FMC: Zinc-coated steel or aluminum.

G. LFMC: Flexible steel conduit with PVC jacket.

H. Fittings for Conduit (Including all Types and Flexible and Liquidtight), EMT, and Cable: NEMA FB 1; listed for type and size raceway with which used, and for application and environment in which installed.
   1. Conduit Fittings for Hazardous (Classified) Locations: Comply with UL 886.
   2. Fittings for EMT: Steel set-screw or compression type.

2.2 NONMETALLIC CONDUIT AND TUBING

A. Available Manufacturers: Subject to compliance with requirements, manufacturers offering products that may be incorporated into the Work include, but are not limited to, the following:

B. Manufacturers: Subject to compliance with requirements, provide products by one of the following:
   1. AFC Cable Systems, Inc.
   2. Anamet Electrical, Inc.; Anaconda Metal Hose.
   3. Arnco Corporation.
   4. CANTEX Inc.
   5. CertainTeed Corp.; Pipe & Plastics Group.
   6. Condux International, Inc.
   7. ElecSYS, Inc.
   8. Electri-Flex Co.
   9. Lamson & Sessions; Carlon Electrical Products.
   10. Manhattan/CDT/Cole-Flex.
   11. RACO; a Hubbell Company.
   12. Thomas & Betts Corporation.

C. RNC: NEMA TC 2, Type EPC-40-PVC, unless otherwise indicated.

D. Fittings for RNC: NEMA TC 3; match to conduit or tubing type and material.

2.3 METAL WIREWAYS

A. Available Manufacturers: Subject to compliance with requirements, manufacturers offering products that may be incorporated into the Work include, but are not limited to, the following:

B. Manufacturers: Subject to compliance with requirements, provide products by one of the following:
   1. Cooper B-Line, Inc.
   2. Hoffman.
   3. Square D; Schneider Electric.

C. Description: Sheet metal sized and shaped as indicated, NEMA 250, Type 1, unless otherwise indicated.

D. Fittings and Accessories: Include couplings, offsets, elbows, expansion joints, adapters, hold-down straps, end caps, and other fittings to match and mate with wireways as required for complete system.

E. Wireway Covers: Screw-cover type unless specifically noted otherwise on the drawings.

F. Finish: Manufacturer's standard enamel finish.

2.4 SURFACE RACEWAYS

A. Surface Metal Raceways: Galvanized steel with snap-on covers. Manufacturer's standard enamel finish in color selected by Architect.
   1. Available Manufacturers: Subject to compliance with requirements, manufacturers offering products that may be incorporated into the Work include, but are not limited to, the following:
   2. Manufacturers: Subject to compliance with requirements, provide products by one of the following:
      a. Thomas & Betts Corporation.
      b. Walker Systems, Inc.; Wiremold Company (The).
      c. Wiremold Company (The); Electrical Sales Division.

2.5 BOXES, ENCLOSURES, AND CABINETS

A. Available Manufacturers: Subject to compliance with requirements, manufacturers offering products that may be incorporated into the Work include, but are not limited to, the following:

B. Manufacturers: Subject to compliance with requirements, provide products by one of the following:
   1. Cooper Crouse-Hinds; Div. of Cooper Industries, Inc.
   2. EGS/Appleton Electric.
   3. Erickson Electrical Equipment Company.
   4. Hoffman.
   5. Hubbell Incorporated; Killark Electric Manufacturing Co. Division.
   6. O-Z/Gedney; a unit of General Signal.
   7. RACO; a Hubbell Company.
   8. Scott Fetzer Co.; Adalet Division.
   9. Spring City Electrical Manufacturing Company.
   10. Thomas & Betts Corporation.
   11. Walker Systems, Inc.; Wiremold Company (The).

C. Sheet Metal Outlet and Device Boxes: NEMA OS 1.

D. Cast-Metal Outlet and Device Boxes: NEMA FB 1, ferrous alloy or aluminum, Type FD, with gasketed cover.

E. Metal Floor Boxes: Cast or sheet metal, fully adjustable, rectangular.

F. Small Sheet Metal Pull and Junction Boxes: NEMA OS 1.

G. Hinged-Cover Enclosures: NEMA 250, Type 1, with continuous-hinge cover with flush latch, unless otherwise indicated.
   1. Metal Enclosures: Steel, finished inside and out with manufacturer's standard enamel.

H. Cabinets:
   1. NEMA 250, Type 1, galvanized-steel box with removable interior panel and removable front, finished inside and out with manufacturer's standard enamel.
   2. Hinged door in front cover with flush latch and concealed hinge.
   3. Key latch to match panelboards.
   4. Metal barriers to separate wiring of different systems and voltage.
   5. Accessory feet where required for freestanding equipment.

PART 3 - EXECUTION

3.1 RACEWAY APPLICATION

A. Outdoors: Apply raceway products as specified below, unless otherwise indicated:
   1. Exposed Conduit: Rigid steel or IMC conduit.
   2. Concealed Conduit, Aboveground: RNC, Type EPC-40-PVC.
   3. Underground Conduit: RNC, Type EPC-40-PVC, direct buried.
   4. Connection to Vibrating Equipment: LFMC.
   5. Boxes and Enclosures, Aboveground: NEMA 250, Type 3R.

B. Comply with the following indoor applications, unless otherwise indicated:
   1. Exposed, Not Subject to Physical Damage: EMT.
   2. Exposed, Not Subject to Severe Physical Damage: EMT.
   3. Concealed in Ceilings and Interior Walls and Partitions: EMT.
   4. Connection to Vibrating Equipment: FMC, except use LFMC in damp or wet locations.
   5. Damp or Wet Locations: Rigid steel conduit or IMC.
   6. Raceways for Communications Cable in Spaces Used for Environmental Air: EMT.
   7. Raceways for Concealed General Purpose Distribution of Low-Voltage and Communications Cable: EMT.
   8. Boxes and Enclosures: NEMA 250, Type 1, except use NEMA 250, Type 4, nonmetallic in damp or wet locations.

C. Minimum Raceway Size: 3/4-inch trade size.

D. Raceway Fittings: Compatible with raceways and suitable for use and location.
   1. Rigid and Intermediate Steel Conduit: Use threaded rigid steel conduit fittings, unless otherwise indicated.

3.2 INSTALLATION

A. Comply with NECA 1 for installation requirements applicable to products specified in Part 2 except where requirements on Drawings or in this Article are stricter.

B. Keep raceways at least 6 inches away from parallel runs of flues and steam or hot-water pipes. Install horizontal raceway runs above water and steam piping.

C. Complete raceway installation before starting conductor installation.

D. Arrange stub-ups so curved portions of bends are not visible above the finished slab.

E. Install no more than the equivalent of three 90-degree bends in any conduit run except for communications conduits, for which fewer bends are allowed.

F. Conceal conduit and EMT within finished walls, ceilings, and floors, unless otherwise indicated.

G. Raceway Terminations at Locations Subject to Moisture or Vibration: Use insulating bushings to protect conductors, including conductors smaller than No. 4 AWG.

H. Install pull wires in empty raceways. Use polypropylene or monofilament plastic line with not less than 200-lb tensile strength. Leave at least 12 inches of slack at each end of pull wire.

I. Flexible Conduit Connections: Use maximum of 72 inches of flexible conduit for recessed and semirecessed lighting fixtures, equipment subject to vibration, noise transmission, or movement; and for transformers and motors.
   1. Use LFMC in damp or wet locations subject to severe physical damage.
   2. Use LFMC in damp or wet locations not subject to severe physical damage.

J. Recessed Boxes in Masonry Walls: Saw-cut opening for box in center of cell of masonry block, and install box flush with surface of wall.

K. Set metal floor boxes level and flush with finished floor surface.

3.3 PROTECTION

A. Provide final protection and maintain conditions that ensure coatings, finishes, and cabinets are without damage or deterioration at time of Substantial Completion.
   1. Repair damage to galvanized finishes with zinc-rich paint recommended by manufacturer.
   2. Repair damage to finishes as recommended by the manufacturer.

END OF SECTION 260533

PART 1 - GENERAL

1.1 SUMMARY

A. This Section includes the following:
   1. Identification for raceway and metal-clad cable.
   2. Identification for conductors and communication and control cable.
   3. Warning labels and signs.
   4. Instruction signs.
   5. Equipment identification labels.
   6. Miscellaneous identification products.

1.2 QUALITY ASSURANCE

A. Comply with NFPA 70.

B. Comply with 29 CFR 1910.145.

1.3 COORDINATION

A. Coordinate identification names, abbreviations, colors, and other features with requirements in the Contract Documents, Shop Drawings, manufacturer's wiring diagrams, and the Operation and Maintenance Manual, and with those required by codes, standards, and 29 CFR 1910.145. Use consistent designations throughout Project.

B. Coordinate installation of identifying devices with completion of covering and painting of surfaces where devices are to be applied.

C. Coordinate installation of identifying devices with location of access panels and doors.

D. Install identifying devices before installing acoustical ceilings and similar concealment.

PART 2 - PRODUCTS

2.1 WARNING LABELS AND SIGNS

A. Comply with NFPA 70 and 29 CFR 1910.145.

B. Self-Adhesive Warning Labels: Factory printed, multicolor, pressure-sensitive adhesive labels, configured for display on front cover, door, or other access to equipment, unless otherwise indicated.

C. Baked-Enamel Warning Signs: Preprinted aluminum signs, punched or drilled for fasteners, with colors, legend, and size required for

application. 1/4-inch grommets in corners for mounting. Nominal size, 7 by 10 inches.

2.2 EQUIPMENT IDENTIFICATION LABELS

A. Self-Adhesive, Engraved, Laminated Acrylic or Melamine Label: Adhesive backed, with white letters on a dark-gray background. Minimum letter height shall be 3/8 inch.

2.3 MISCELLANEOUS IDENTIFICATION PRODUCTS

A. Cable Ties: Fungus-inert, self-extinguishing, 1-piece, self-locking, Type 6/6 nylon cable ties.
   1. Minimum Width: 3/16 inch.
   2. Tensile Strength: 50 lb, minimum.
   3. Temperature Range: Minus 40 to plus 185 deg F.
   4. Color: Black, except where used for color-coding.

B. Fasteners for Labels and Signs: Self-tapping, stainless-steel screws or stainless-steel machine screws with nuts and flat and lock washers.

PART 3 - EXECUTION

3.1 APPLICATION

A. Accessible Raceways and Cables of Auxiliary Systems: Identify the following systems with color-coded, self-adhesive vinyl tape applied in bands:
   1. Fire Alarm System: Red.
   2. Telecommunication System: Green and yellow.
   3. Control Wiring: Green and red.

B. Power-Circuit Conductor Identification: For primary and secondary conductors No. 1/0 AWG and larger in vaults, pull and junction boxes, manholes, and handholes use color-coding conductor tape marker tape. Identify source and circuit number of each set of conductors. For single conductor cables, identify phase in addition to the above.

C. Branch-Circuit Conductor Identification: Where there are conductors for more than three branch circuits in same junction or pull box, use color-coding conductor tape. Identify each ungrounded conductor according to source and circuit number.

D. Equipment Identification Labels: On each unit of equipment, install unique designation label that is consistent with wiring diagrams, schedules, and Operation and Maintenance Manual. Apply labels to disconnect switches and protection equipment, central or master units, control panels, control stations, terminal cabinets, and racks of each system. Systems include power, lighting, control, communication, signal, monitoring, and alarm systems unless equipment is provided with its own identification.

1. Labeling Instructions:
   a. Indoor Equipment: Self-adhesive, engraved, laminated acrylic or melamine label. Unless otherwise indicated, provide a single line of text with 1/2-inch- high letters on 1-1/2-inch- high label; where 2 lines of text are required, use labels 2 inches high.
   b. Elevated Components: Increase sizes of labels and letters to those appropriate for viewing from the floor.
2. Equipment to Be Labeled:
   a. Panelboards, electrical cabinets, and enclosures.
   b. Electrical switchboard.
   c. Disconnect switches.
   d. Enclosed circuit breakers.
   e. Motor starters.
   f. Remote-controlled switches, dimmer modules, and control devices.
   g. Fire-alarm control panel and annunciators.

3.2 INSTALLATION

A. Verify identity of each item before installing identification products.

B. Location: Install identification materials and devices at locations for most convenient viewing without interference with operation and maintenance of equipment.

C. Apply identification devices to surfaces that require finish after completing finish work.

D. Self-Adhesive Identification Products: Clean surfaces before application, using materials and methods recommended by manufacturer of identification device.

E. System Identification Color Banding for Raceways and Cables: Each color band shall completely encircle cable or conduit. Place adjacent bands of two-color markings in contact, side by side. Locate bands at changes in direction, at penetrations of walls and floors, at 50-foot maximum intervals in straight runs, and at 25-foot maximum intervals in congested areas.

F. Color-Coding for Phase and Voltage Level Identification, 600 V and Less: Use the colors listed below for ungrounded service, feeder, and branch-circuit conductors.
   1. Color shall be factory applied or, for sizes larger than No. 10 AWG if authorities having jurisdiction permit, field applied.
   2. Colors for 208/120-V Circuits:
      a. Phase A: Black.
      b. Phase B: Red.
      c. Phase C: Blue.
   3. Field-Applied, Color-Coding Conductor Tape: Apply in half-lapped turns for a minimum distance of 6 inches from terminal points and in boxes where splices or taps are made. Apply last two turns of

tape with no tension to prevent possible unwinding. Locate bands to avoid obscuring factory cable markings.

END OF SECTION 260553

PART 1 - GENERAL

1.1 SUMMARY

A. This Section includes the following lighting control devices:
   1. Indoor occupancy sensors.

1.2 DEFINITIONS

A. LED: Light-emitting diode.

B. PIR: Passive infrared.

1.3 SUBMITTALS

A. Product Data: For each type of product indicated.

B. Shop Drawings: Show installation details for occupancy and light-level sensors.
   1. Interconnection diagrams showing field-installed wiring.

C. Operation and Maintenance Data: For each type of product to include in emergency, operation, and maintenance manuals.

1.4 QUALITY ASSURANCE

A. Electrical Components, Devices, and Accessories: Listed and labeled as defined in NFPA 70, Article 100, by a testing agency acceptable to authorities having jurisdiction, and marked for intended use.

1.5 COORDINATION

A. Coordinate layout and installation of ceiling-mounted devices with other construction that penetrates ceilings or is supported by them, including light fixtures, HVAC equipment, smoke detectors, fire-suppression system, and partition assemblies.

PART 2 - PRODUCTS

2.1 INDOOR OCCUPANCY SENSORS

A. Available Manufacturers: Subject to compliance with requirements, manufacturers offering products that may be incorporated into the Work include, but are not limited to, the following:

B. Manufacturers: Subject to compliance with requirements, provide products by one of the following:

C. Basis-of-Design Product: Subject to compliance with requirements, provide the product indicated on Drawings.

D. General Description: Wall- or ceiling-mounting, solid-state units with a separate relay unit.
   1. Operation: Unless otherwise indicated, turn lights on when covered area is occupied and off when unoccupied; with a time delay for turning lights off, adjustable over a minimum range of 1 to 15 minutes.
   2. Sensor Output: Contacts rated to operate the connected relay, complying with UL 773A. Sensor shall be powered from the relay unit.
   3. Relay Unit: Dry contacts rated for 20-A ballast load at 120- and 277-V ac, for 13-A tungsten at 120-V ac, and for 1 hp at 120-V ac. Power supply to sensor shall be 24-V dc, 150-mA, Class 2 power source as defined by NFPA 70.
   4. Mounting:
      a. Sensor: Suitable for mounting in any position on a standard outlet box.
      b. Relay: Externally mounted through a 1/2-inch knockout in a standard electrical enclosure.
      c. Time-Delay and Sensitivity Adjustments: Recessed and concealed behind hinged door.
   5. Indicator: LED, to show when motion is being detected during testing and normal operation of the sensor.
   6. Bypass Switch: Override the on function in case of sensor failure.
   7. Automatic Light-Level Sensor: Adjustable from 2 to 200 fc; keep lighting off when selected lighting level is present.

E. PIR Type: Ceiling mounting; detect occupancy by sensing a combination of heat and movement in area of coverage.
   1. Detector Sensitivity: Detect occurrences of 6-inch- minimum movement of any portion of a human body that presents a target of not less than 36 sq. in..
   2. Detection Coverage (Room): Detect occupancy anywhere in a circular area of 1000 sq. ft. when mounted on a 96-inch- high ceiling.
   3. Detection Coverage (Corridor): Detect occupancy within 90 feet when mounted on a 10-foot- high ceiling.

F. Ultrasonic Type: Ceiling mounting; detect occupancy by sensing a change in pattern of reflected ultrasonic energy in area of coverage.
   1. Detector Sensitivity: Detect a person of average size and weight moving not less than 12 inches in either a horizontal or a vertical manner at an approximate speed of 12 inches/s.
   2. Detection Coverage (Small Room): Detect occupancy anywhere within a circular area of 600 sq. ft. when mounted on a 96-inch-high ceiling.
   3. Detection Coverage (Standard Room): Detect occupancy anywhere within a circular area of 1000 sq. ft. when mounted on a 96-inch-high ceiling.

4. Detection Coverage (Large Room): Detect occupancy anywhere within a circular area of 2000 sq. ft. when mounted on a 96-inch-high ceiling.
5. Detection Coverage (Corridor): Detect occupancy anywhere within 90 feet when mounted on a 10-foot- high ceiling in a corridor not wider than 14 feet.

G. Dual-Technology Type: Ceiling mounting; detect occupancy by using a combination of PIR and ultrasonic detection methods in area of coverage. Particular technology or combination of technologies that controls on-off functions shall be selectable in the field by operating controls on unit.
1. Sensitivity Adjustment: Separate for each sensing technology.
2. Detector Sensitivity: Detect occurrences of 6-inch- minimum movement of any portion of a human body that presents a target of not less than 36 sq. in., and detect a person of average size and weight moving not less than 12 inches in either a horizontal or a vertical manner at an approximate speed of 12 inches/s.
3. Detection Coverage (Standard Room): Detect occupancy anywhere within a circular area of 1000 sq. ft. when mounted on a 96-inch-high ceiling.

2.2 CONDUCTORS AND CABLES

A. Power Wiring to Supply Side of Remote-Control Power Sources: Not smaller than No. 12 AWG. Comply with requirements in Division 26 Section "Low-Voltage Electrical Power Conductors and Cables."

B. Classes 2 and 3 Control Cable: Multiconductor cable with stranded-copper conductors not smaller than No. 18 AWG or as specifically required by the manufacturer.

C. Class 1 Control Cable: Multiconductor cable with stranded-copper conductors not smaller than No. 14 AWG or as specifically required by the manufacturer.

PART 3 - EXECUTION

3.1 SENSOR INSTALLATION

A. Install and aim sensors in locations to achieve not less than 90 percent coverage of areas indicated. Do not exceed coverage limits specified in manufacturer's written instructions.

3.2 WIRING INSTALLATION

A. Wiring within Enclosures: Comply with NECA 1. Separate power-limited and nonpower-limited conductors according to conductor manufacturer's written instructions.

B. Size conductors according to lighting control device manufacturer's written instructions, unless otherwise indicated.

C. Splices, Taps, and Terminations: Make connections only on numbered terminal strips in junction, pull, and outlet boxes; terminal cabinets; and equipment enclosures.

3.3 FIELD QUALITY CONTROL

A. Perform the following field tests and inspections and prepare test reports:
   1. After installing sensors, and after electrical circuitry has been energized, adjust and test for compliance with requirements.
   2. Operational Test: Verify operation of each lighting control device, and adjust time delays.

B. Lighting control devices that fail tests and inspections are defective work.

3.4 ADJUSTING

A. Occupancy Adjustments: When requested within 12 months of date of Substantial Completion, provide on-site assistance in adjusting sensors to suit occupied conditions. Provide up to two visits to Project for this purpose.

3.5 DEMONSTRATION

A. Coordinate demonstration of products specified in this Section with demonstration requirements for low-voltage, programmable lighting control system.

END OF SECTION 260923

PART 1 - GENERAL

1.1 SUMMARY

A. Section Includes:
   1. Distribution panelboards.
   2. Lighting and appliance branch-circuit panelboards.

1.2 SUBMITTALS

A. Product Data: For each type of panelboard, switching and overcurrent protective device, transient voltage suppression device, accessory, and component indicated. Include dimensions and manufacturers' technical data on features, performance, electrical characteristics, ratings, and finishes.

B. Shop Drawings: For each panelboard and related equipment.
   1. Include dimensioned plans, elevations, sections, and details. Show tabulations of installed devices, equipment features, and ratings.
   2. Detail enclosure types and details for types other than NEMA 250, Type 1.
   3. Detail bus configuration, current, and voltage ratings.
   4. Short-circuit current rating of panelboards and overcurrent protective devices.
   5. Detail features, characteristics, ratings, and factory settings of individual overcurrent protective devices and auxiliary components.
   6. Include wiring diagrams for power, signal, and control wiring.

C. Panelboard Schedules: For installation in panelboards. Submit final versions after load balancing.

D. Operation and Maintenance Data: For panelboards and components to include in emergency, operation, and maintenance manuals.
   1. Manufacturer's written instructions for testing and adjusting overcurrent protective devices.
   2. Time-current curves, including selectable ranges for each type of overcurrent protective device that allows adjustments.

1.3 QUALITY ASSURANCE

A. Source Limitations: Obtain panelboards, overcurrent protective devices, components, and accessories from single source from single manufacturer.

B. Product Selection for Restricted Space: Drawings indicate maximum dimensions for panelboards including clearances between panelboards and adjacent surfaces and other items. Comply with indicated maximum dimensions.

C. Electrical Components, Devices, and Accessories: Listed and labeled as defined in NFPA 70, by a qualified testing agency, and marked for intended location and application.

D. Comply with NEMA PB 1.

E. Comply with NFPA 70.

1.4 DELIVERY, STORAGE, AND HANDLING

A. Remove loose packing and flammable materials from inside panelboards; install temporary electric heating (250 W per panelboard) to prevent condensation.

B. Handle and prepare panelboards for installation according to NECA 407 and NEMA PB 1.

1.5 PROJECT CONDITIONS

A. Environmental Limitations:
1. Do not deliver or install panelboards until spaces are enclosed and weathertight, wet work in spaces is complete and dry, work above panelboards is complete, and temporary HVAC system is operating and maintaining ambient temperature and humidity conditions at occupancy levels during the remainder of the construction period.
2. Rate equipment for continuous operation under the following conditions unless otherwise indicated:
   a. Ambient Temperature: Not exceeding 23 deg F to plus 104 deg F.
   b. Altitude: Not exceeding 6600 feet.

B. Service Conditions: NEMA PB 1, usual service conditions, as follows:
1. Ambient temperatures within limits specified.
2. Altitude not exceeding 6600 feet.

1.6 COORDINATION

A. Coordinate layout and installation of panelboards and components with other construction that penetrates walls or is supported by them, including electrical and other types of equipment, raceways, piping, encumbrances to workspace clearance requirements, and adjacent surfaces. Maintain required workspace clearances and required clearances for equipment access doors and panels.

1.7 EXTRA MATERIALS

A. Furnish extra materials that match products installed and that are packaged with protective covering for storage and identified with labels describing contents.
1. Keys: Two spares for each type of panelboard cabinet lock.

2. Circuit Breakers As noted on the individual panelboard schedule.

PART 2 - PRODUCTS

2.1 GENERAL REQUIREMENTS FOR PANELBOARDS

A. Enclosures: Flush- and surface-mounted cabinets.
   1. Rated for environmental conditions at installed location.
      a. Indoor Dry and Clean Locations: NEMA 250, Type 1.
      b. Outdoor Locations: NEMA 250, Type 3R.
   2. Hinged Front Cover: Entire front trim hinged to box and with standard door within hinged trim cover.
   3. Finishes:
      a. Panels and Trim: Door-In-Door construction, steel factory finished immediately after cleaning and pretreating with manufacturer's standard two-coat, baked-on finish consisting of prime coat and thermosetting topcoat.
      b. Back Boxes: Galvanized steel.
   4. Directory Card: Inside panelboard door, mounted in transparent card holder.

B. Incoming Mains Location: As required for each specific instance. Field verify prior to order.

C. Phase, Neutral, and Ground Buses:
   1. Material: Hard-drawn copper, 98 percent conductivity.
   2. Equipment Ground Bus: Adequate for feeder and branch-circuit equipment grounding conductors; bonded to box.

D. Conductor Connectors: Suitable for use with conductor material and sizes.
   1. Material: Hard-drawn copper, 98 percent conductivity.
   2. Main and Neutral Lugs: Mechanical type.
   3. Ground Lugs and Bus-Configured Terminators: Mechanical type.
   4. Feed-Through Lugs: Mechanical type, suitable for use with conductor material. Locate at opposite end of bus from incoming lugs or main device.
   5. Subfeed (Double) Lugs: Mechanical type suitable for use with conductor material. Locate at same end of bus as incoming lugs or main device.

E. Service Equipment Label: NRTL labeled for use as service equipment for panelboards or load centers with one or more main service disconnecting and overcurrent protective devices.

F. Future Devices: Mounting brackets, bus connections, filler plates, and necessary appurtenances required for future installation of devices.

G. Panelboard Short-Circuit Current Rating: Rated for series-connected system with integral or remote upstream overcurrent protective devices and labeled by an NRTL. Include size and type of allowable upstream

and branch devices, listed and labeled for series-connected short-circuit rating by an NRTL.

H. Panelboard Short-Circuit Current Rating: Fully rated to interrupt symmetrical short-circuit current available at terminals.

2.2 DISTRIBUTION PANELBOARDS

A. Manufacturers: Subject to compliance with requirements, provide products by one of the following:

B. Basis-of-Design Product: Subject to compliance with requirements, provide product indicated on Drawings.

C. Panelboards: NEMA PB 1, power and feeder distribution type.

D. Doors: Secured with vault-type latch with tumbler lock; keyed alike.
   1. For doors more than 36 inches high, provide two latches, keyed alike.

E. Mains: As indicated on the drawings.

F. Branch Overcurrent Protective Devices for Circuit-Breaker Frame Sizes 125 A and Smaller: Bolt-on circuit breakers.

G. Branch Overcurrent Protective Devices for Circuit-Breaker Frame Sizes Larger Than 125 A: Bolt-on circuit breakers; plug-in circuit breakers where individual positive-locking device requires mechanical release for removal.

H. Provide integral transient voltage surge suppression. See plans and specifications for additional information.

2.3 LIGHTING AND APPLIANCE BRANCH-CIRCUIT PANELBOARDS

A. Manufacturers: Subject to compliance with requirements, provide products by one of the following:

B. Basis-of-Design Product: Subject to compliance with requirements, provide product indicated on Drawings.

C. Panelboards: NEMA PB 1, lighting and appliance branch-circuit type.

D. Mains: As indicated on the drawings.

E. Branch Overcurrent Protective Devices: Bolt-on circuit breakers, replaceable without disturbing adjacent units.

F. Doors: Concealed hinges; secured with flush latch with tumbler lock; keyed alike.

G. Provide integral transient voltage surge suppression. See plans and specifications for additional information.

2.4 DISCONNECTING AND OVERCURRENT PROTECTIVE DEVICES

A. Manufacturers: Subject to compliance with requirements, provide products by one of the following:

B. Basis-of-Design Product: Subject to compliance with requirements, provide product indicated on Drawings.

C. Molded-Case Circuit Breaker (MCCB): Comply with UL 489, with interrupting capacity to meet available fault currents.
   1. Thermal-Magnetic Circuit Breakers: Inverse time-current element for low-level overloads, and instantaneous magnetic trip element for short circuits. Adjustable magnetic trip setting for circuit-breaker frame sizes 250 A and larger.
   2. Adjustable Instantaneous-Trip Circuit Breakers: Magnetic trip element with front-mounted, field-adjustable trip setting.
   3. GFCI Circuit Breakers: Single- and two-pole configurations with Class A ground-fault protection (6-mA trip).
   4. Ground-Fault Equipment Protection (GFEP) Circuit Breakers: Class B ground-fault protection (30-mA trip).
   5. Molded-Case Circuit-Breaker (MCCB) Features and Accessories:
      a. Standard frame sizes, trip ratings, and number of poles.
      b. Lugs: Mechanical style, suitable for number, size, trip ratings, and conductor materials.
      c. Application Listing: Appropriate for application; Type SWD for switching fluorescent lighting loads; Type HID for feeding fluorescent and high-intensity discharge (HID) lighting circuits.
      d. Ground-Fault Protection: Integrally mounted relay and trip unit with adjustable pickup and time-delay settings, push-to-test feature, and ground-fault indicator. Provide where noted.
      e. Shunt Trip: A trip coil energized from separate circuit, set to trip at 55 percent of rated voltage. Verify voltage prior to order. Provide where noted.
      f. Undervoltage Trip: Set to operate at 35 to 75 percent of rated voltage without intentional time delay. Provide where noted.
      g. Auxiliary Contacts: One SPDT switch with "a" and "b" contacts; "a" contacts mimic circuit-breaker contacts and "b" contacts operate in reverse of circuit-breaker contacts. Provide where noted.
      h. Multipole units enclosed in a single housing or factory assembled to operate as a single unit.
      i. Handle Padlocking Device: Fixed attachment, for locking circuit-breaker handle in on or off position. Provide where noted.
      j. Handle Clamp: Loose attachment, for holding circuit-breaker handle in on position. Provide where noted.

PART 3 - EXECUTION

3.1 EXAMINATION

A. Receive, inspect, handle, and store panelboards according to NECA 407 and NEMA PB 1.1.

B. Examine panelboards before installation. Reject panelboards that are damaged or rusted or have been subjected to water saturation.

C. Examine elements and surfaces to receive panelboards for compliance with installation tolerances and other conditions affecting performance of the Work.

D. Proceed with installation only after unsatisfactory conditions have been corrected.

3.2 INSTALLATION

A. Install panelboards and accessories according to NECA 407 and NEMA PB 1.1.

B. Temporary Lifting Provisions: Remove temporary lifting eyes, channels, and brackets and temporary blocking of moving parts from panelboards.

C. Mount top of trim 90 inches above finished floor unless otherwise indicated.

D. Mount panelboard cabinet plumb and rigid without distortion of box. Mount recessed panelboards with fronts uniformly flush with wall finish and mating with back box.

E. Install overcurrent protective devices and controllers not already factory installed.
   1. Set field-adjustable, circuit-breaker trip ranges.

F. Install filler plates in unused spaces.

G. Stub four 1-inch empty conduits from panelboard into accessible ceiling space or space designated to be ceiling space in the future.

H. Arrange conductors in gutters into groups and bundle and wrap with wire ties after completing load balancing.

I. Comply with NECA 1.

3.3 IDENTIFICATION

A. Identify field-installed conductors, interconnecting wiring, and components; provide warning signs complying with Division 26 Section "Identification for Electrical Systems."

B. Create a directory to indicate installed circuit loads after balancing panelboard loads; incorporate Owner's final room designations. Obtain approval before installing. Use a computer or typewriter to create directory; handwritten directories are not acceptable.

C. Panelboard Nameplates: Label each panelboard with a nameplate complying with requirements for identification specified in Division 26 Section "Identification for Electrical Systems."

D. Device Nameplates: Label each branch circuit device in distribution panelboards with a nameplate complying with requirements for identification specified in Division 26 Section "Identification for Electrical Systems."

3.4 FIELD QUALITY CONTROL

A. Perform tests and inspections.

B. Acceptance Testing Preparation:
   1. Test insulation resistance for each panelboard bus, component, connecting supply, feeder, and control circuit.
   2. Test continuity of each circuit.

C. Tests and Inspections:
   1. Perform each visual and mechanical inspection and electrical test stated in NETA Acceptance Testing Specification. Certify compliance with test parameters.
   2. Correct malfunctioning units on-site, where possible, and retest to demonstrate compliance; otherwise, replace with new units and retest.

D. Panelboards will be considered defective if they do not pass tests and inspections.

E. Prepare test and inspection reports, including a certified report that identifies panelboards included and that describes scanning results. Include notation of deficiencies detected, remedial action taken, and observations after remedial action.

3.5 ADJUSTING

A. Adjust moving parts and operable component to function smoothly, and lubricate as recommended by manufacturer.

B. Set field-adjustable circuit-breaker trip ranges.

C. Load Balancing: After Substantial Completion, but not more than 60 days after Final Acceptance, measure load balancing and make circuit changes.
   1. Measure as directed during period of normal system loading.
   2. Perform load-balancing circuit changes outside normal occupancy/working schedule of the facility and at time directed. Avoid disrupting critical 24-hour services such as fax machines

and on-line data processing, computing, transmitting, and receiving equipment.

3. After circuit changes, recheck loads during normal load period. Record all load readings before and after changes and submit test records.
4. Tolerance: Difference exceeding 20 percent between phase loads, within a panelboard, is not acceptable. Rebalance and recheck as necessary to meet this minimum requirement.

3.6 PROTECTION

A. Temporary Heating: Apply temporary heat to maintain temperature according to manufacturer's written instructions.

END OF SECTION 262416

PART 1 - GENERAL

1.1 SUMMARY

A. This Section includes the following:
   1. Receptacles, receptacles with integral GFCI, and associated device plates.
   2. Wall-box motion sensors.
   3. Snap switches and wall-box dimmers.
   4. Floor service outlets.

1.2 DEFINITIONS

A. EMI: Electromagnetic interference.

B. GFCI: Ground-fault circuit interrupter.

C. Pigtail: Short lead used to connect a device to a branch-circuit conductor.

D. RFI: Radio-frequency interference.

1.3 SUBMITTALS

A. Product Data: For each type of product indicated.

B. Shop Drawings: List of legends and description of materials and process used for premarking wall plates.

C. Samples: One for each type of device and wall plate specified, in each color specified.

D. Field quality-control test reports.

E. Operation and Maintenance Data: For wiring devices to include in all manufacturers' packing label warnings and instruction manuals that include labeling conditions.

1.4 QUALITY ASSURANCE

A. Source Limitations: Obtain each type of wiring device and associated wall plate through one source from a single manufacturer. Insofar as they are available, obtain all wiring devices and associated wall plates from a single manufacturer and one source.

B. Electrical Components, Devices, and Accessories: Listed and labeled as defined in NFPA 70, Article 100, by a testing agency acceptable to authorities having jurisdiction, and marked for intended use.

C. Comply with NFPA 70.

1.5 COORDINATION

A. Receptacles for Owner-Furnished Equipment: Match plug configurations.
   1. Cord and Plug Sets: Match equipment requirements.

PART 2 - PRODUCTS

2.1 MANUFACTURERS

A. Manufacturers' Names: As indicated on the drawings.

2.2 STRAIGHT BLADE RECEPTACLES

A. Convenience Receptacles, 125 V, 20 A: Comply with NEMA WD 1, NEMA WD 6 configuration 5-20R, and UL 498.

2.3 GFCI RECEPTACLES

A. General Description: Straight blade, feed-through type. Comply with NEMA WD 1, NEMA WD 6, UL 498, and UL 943, Class A, and include indicator light that is lighted when device is tripped.

B. Duplex GFCI Convenience Receptacles, 125 V, 20 A:

2.4 CORD AND PLUG SETS

A. Description: Match voltage and current ratings and number of conductors to requirements of equipment being connected.
   1. Cord: Rubber-insulated, stranded-copper conductors, with Type SOW-A jacket; with green-insulated grounding conductor and equipment-rating ampacity plus a minimum of 30 percent.
   2. Plug: Nylon body and integral cable-clamping jaws. Match cord and receptacle type for connection.

2.5 SNAP SWITCHES

A. Comply with NEMA WD 1 and UL 20.

B. Switches, 120/277 V, 20 A:

2.6 WALL-BOX DIMMERS

A. Dimmer Switches: Modular, full-wave, solid-state units with integral, quiet on-off switches, with audible frequency and EMI/RFI suppression filters.

B. Control: Continuously adjustable slider; with single-pole or three-way switching. Comply with UL 1472.

C. LED Source Dimmers: 120 V; Suitable for use with the selected LED driver. On-off switch positions shall bypass dimmer module.
   1. Dimmers shall require no derating when ganged with other devices. Illuminated when "OFF." Dimmers shall not be rated less than the controlled connected load.

2.7 WALL PLATES

A. Single and combination types to match corresponding wiring devices.
   1. Plate-Securing Screws: Metal with head color to match plate finish.
   2. Material for Finished Spaces: Smooth, high-impact thermoplastic.
   3. Material for Unfinished Spaces: Galvanized steel.
   4. Material for Damp Locations: Thermoplastic with spring-loaded lift cover, and listed and labeled for use in "wet locations."

2.8 FINISHES

A. Color: Wiring device catalog numbers in Section Text do not designate device color. Coordinate the exact color with the Architect prior to order.

PART 3 - EXECUTION

3.1 INSTALLATION

A. Comply with NECA 1, including the mounting heights listed in that standard, unless otherwise noted.

B. Coordination with Other Trades:
   1. Take steps to insure that devices and their boxes are protected. Do not place wall finish materials over device boxes and do not cut holes for boxes with routers that are guided by riding against outside of the boxes.
   2. Keep outlet boxes free of plaster, drywall joint compound, mortar, cement, concrete, dust, paint, and other material that may contaminate the raceway system, conductors, and cables.
   3. Install device boxes in brick or block walls so that the cover plate does not cross a joint unless the joint is troweled flush with the face of the wall.
   4. Install wiring devices after all wall preparation, including painting, is complete.

C. Conductors:
   1. Do not strip insulation from conductors until just before they are spliced or terminated on devices.
   2. Strip insulation evenly around the conductor using tools designed for the purpose. Avoid scoring or nicking of solid wire or cutting strands from stranded wire.
   3. The length of free conductors at outlets for devices shall meet provisions of NFPA 70, Article 300, without pigtails.
   4. Existing Conductors:
      a. Cut back and pigtail, or replace all damaged conductors.
      b. Straighten conductors that remain and remove corrosion and foreign matter.
      c. Pigtailing existing conductors is permitted provided the outlet box is large enough.

D. Device Installation:
   1. Replace all devices that have been in temporary use during construction or that show signs that they were installed before building finishing operations were complete.
   2. Keep each wiring device in its package or otherwise protected until it is time to connect conductors.
   3. Do not remove surface protection, such as plastic film and smudge covers, until the last possible moment.
   4. Connect devices to branch circuits using pigtails that are not less than 6 inches in length.
   5. When there is a choice, use side wiring with binding-head screw terminals. Wrap solid conductor tightly clockwise, 2/3 to 3/4 of the way around terminal screw.
   6. Use a torque screwdriver when a torque is recommended or required by the manufacturer.
   7. When conductors larger than No. 12 AWG are installed on 15- or 20-A circuits, splice No. 12 AWG pigtails for device connections.
   8. Tighten unused terminal screws on the device.
   9. When mounting into metal boxes, remove the fiber or plastic washers used to hold device mounting screws in yokes, allowing metal-to-metal contact.

E. Receptacle Orientation:
   1. Install ground pin of vertically mounted receptacles up, and on horizontally mounted receptacles to the right.

F. Device Plates: Do not use oversized or extra-deep plates. Repair wall finishes and remount outlet boxes when standard device plates do not fit flush or do not cover rough wall opening.

G. Dimmers:
   1. Install dimmers within terms of their listing.
   2. Install unshared neutral conductors on line and load side of dimmers according to manufacturers' device listing conditions in the written instructions.

H. Arrangement of Devices: Unless otherwise indicated, mount flush, with long dimension vertical and with grounding terminal of receptacles on top. Group adjacent switches under single, multigang wall plates.

I. Adjust locations of floor service outlets and service poles to suit arrangement of partitions and furnishings.

3.2 IDENTIFICATION

A. Comply with Division 26 Section "Identification for Electrical Systems."
   1. Receptacles: Identify panelboard and circuit number from which served. Use hot, stamped or engraved machine printing with black-filled lettering on face of plate, and durable wire markers or tags inside outlet boxes.

3.3 FIELD QUALITY CONTROL

A. Perform tests and inspections and prepare test reports.
   1. Test Instruments: Use instruments that comply with UL 1436.
   2. Test Instrument for Convenience Receptacles: Digital wiring analyzer with digital readout or illuminated LED indicators of measurement.

B. Tests for Convenience Receptacles:
   1. Line Voltage: Acceptable range is 105 to 132 V.
   2. Percent Voltage Drop under 15-A Load: A value of 6 percent or higher is not acceptable.
   3. Ground Impedance: Values of up to 2 ohms are acceptable.
   4. GFCI Trip: Test for tripping values specified in UL 1436 and UL 943.
   5. Using the test plug, verify that the device and its outlet box are securely mounted.
   6. The tests shall be diagnostic, indicating damaged conductors, high resistance at the circuit breaker, poor connections, inadequate fault current path, defective devices, or similar problems. Correct circuit conditions, remove malfunctioning units and replace with new ones, and retest as specified above.

END OF SECTION 262726

PART 1 - GENERAL

1.1 SUMMARY

A. Section Includes:
   1. Fusible switches.
   2. Nonfusible switches.
   3. Molded-case circuit breakers (MCCBs).
   4. Enclosures.

1.2 DEFINITIONS

A. NC: Normally closed.

B. NO: Normally open.

C. SPDT: Single pole, double throw.

1.3 SUBMITTALS

A. Shop Drawings: For enclosed switches and circuit breakers. Include plans, elevations, sections, details, and attachments to other work.
   1. Wiring Diagrams: For power, signal, and control wiring.

B. Operation and Maintenance Data: For enclosed switches and circuit breakers to include in emergency, operation, and maintenance manuals. In addition to items specified in "Operation and Maintenance Data," include the following:
   1. Manufacturer's written instructions for testing and adjusting enclosed switches and circuit breakers.

1.4 QUALITY ASSURANCE

A. Source Limitations: Obtain enclosed switches and circuit breakers, overcurrent protective devices, components, and accessories, within same product category, from single source from single manufacturer.

B. Product Selection for Restricted Space: Drawings indicate maximum dimensions for enclosed switches and circuit breakers, including clearances between enclosures, and adjacent surfaces and other items. Comply with indicated maximum dimensions.

C. Electrical Components, Devices, and Accessories: Listed and labeled as defined in NFPA 70, by a qualified testing agency, and marked for intended location and application.

D. Comply with NFPA 70.

1.5 PROJECT CONDITIONS

A. Environmental Limitations: Rate equipment for continuous operation under the following conditions unless otherwise indicated:
   1. Ambient Temperature: Not less than minus 22 deg F and not exceeding 104 deg F.
   2. Altitude: Not exceeding 6600 feet.

1.6 COORDINATION

A. Coordinate layout and installation of switches, circuit breakers, and components with equipment served and adjacent surfaces. Maintain required workspace clearances and required clearances for equipment access doors and panels.

1.7 EXTRA MATERIALS

A. Furnish extra materials that match products installed and that are packaged with protective covering for storage and identified with labels describing contents.
   1. Fuses: Equal to 10 percent of quantity installed for each size and type, but no fewer than three of each size and type.

PART 2 - PRODUCTS

2.1 FUSIBLE SWITCHES

A. Type HD, Heavy Duty, Single Throw, 240 and 600-V ac, 1200 A and Smaller: UL 98 and NEMA KS 1, horsepower rated, with clips or bolt pads to accommodate specified fuses, lockable handle with capability to accept three padlocks, and interlocked with cover in closed position.

B. Accessories:
   1. Equipment Ground Kit: Internally mounted and labeled for copper and aluminum ground conductors.
   2. Class R Fuse Kit: Provides rejection of other fuse types when Class R fuses are specified.
   3. Lugs: Mechanical type, suitable for number, size, and conductor material.
   4. Service-Rated Switches: Labeled for use as service equipment.

2.2 NONFUSIBLE SWITCHES

A. Type HD, Heavy Duty, Single Throw, 600-V ac, 1200 A and Smaller: UL 98 and NEMA KS 1, horsepower rated, lockable handle with capability to accept three padlocks, and interlocked with cover in closed position.

B. Accessories:

1. Equipment Ground Kit: Internally mounted and labeled for copper and aluminum ground conductors.
2. Lugs: Mechanical type, suitable for number, size, and conductor material.

2.3 MOLDED-CASE CIRCUIT BREAKERS

A. General Requirements: Comply with UL 489, NEMA AB 1, and NEMA AB 3, with interrupting capacity to comply with available fault currents.

B. Thermal-Magnetic Circuit Breakers: Inverse time-current element for low-level overloads and instantaneous magnetic trip element for short circuits. Adjustable magnetic trip setting for circuit-breaker frame sizes 250 A and larger.

C. Adjustable, Instantaneous-Trip Circuit Breakers: Magnetic trip element with front-mounted, field-adjustable trip setting.

2.4 ENCLOSURES

A. Enclosed Switches and Circuit Breakers: NEMA AB 1, NEMA KS 1, NEMA 250, and UL 50, to comply with environmental conditions at installed location.
1. Indoor, Dry and Clean Locations: NEMA 250, Type 1.
2. Outdoor Locations: NEMA 250, Type 3R.
3. Other Wet or Damp, Indoor Locations: NEMA 250, Type 4.
4. Indoor Locations Subject to Dust, Falling Dirt, and Dripping Noncorrosive Liquids: NEMA 250, Type 12.

PART 3 - EXECUTION

3.1 EXAMINATION

A. Examine elements and surfaces to receive enclosed switches and circuit breakers for compliance with installation tolerances and other conditions affecting performance of the Work.

B. Proceed with installation only after unsatisfactory conditions have been corrected.

3.2 INSTALLATION

A. Install individual wall-mounted switches and circuit breakers with tops at uniform height unless otherwise indicated.

B. Temporary Lifting Provisions: Remove temporary lifting eyes, channels, and brackets and temporary blocking of moving parts from enclosures and components.

C. Install fuses in fusible devices.

D. Comply with NECA 1.

3.3 IDENTIFICATION

A. Comply with requirements in Division 26 Section "Identification for Electrical Systems."
   1. Identify field-installed conductors, interconnecting wiring, and components; provide warning signs.
   2. Label each enclosure with engraved metal or laminated-plastic nameplate.

3.4 FIELD QUALITY CONTROL

A. Tests and Inspections:
   1. Perform each visual and mechanical inspection and electrical test stated in NETA Acceptance Testing Specification. Certify compliance with test parameters.
   2. Correct malfunctioning units on-site, where possible, and retest to demonstrate compliance; otherwise, replace with new units and retest.
   3. Test and adjust controls, remote monitoring, and safeties. Replace damaged and malfunctioning controls and equipment.

B. Enclosed switches and circuit breakers will be considered defective if they do not pass tests and inspections.

3.5 ADJUSTING

A. Adjust moving parts and operable components to function smoothly, and lubricate as recommended by manufacturer.

END OF SECTION 262816

PART 1 - GENERAL

1.1 SUMMARY

A. This Section includes ac, enclosed controllers rated 600 V and less, of the following types:
   1. Across-the-line, manual and magnetic controllers.

1.2 SUBMITTALS

A. Product Data: For each type of enclosed controller. Include dimensions and manufacturer's technical data on features, performance, electrical characteristics, ratings, and finishes.

B. Shop Drawings: For each enclosed controller.
   1. Include dimensioned plans, elevations, sections, and details, including required clearances and service space around equipment. Show tabulations of installed devices, equipment features, and ratings. Include the following:
      a. Each installed unit's type and details.
      b. Nameplate legends.
      c. Short-circuit current rating of integrated unit.
      d. Listed and labeled for series rating of overcurrent protective devices in combination controllers by an NRTL acceptable to authorities having jurisdiction.
      e. Features, characteristics, ratings, and factory settings of individual overcurrent protective devices in combination controllers.
   2. Wiring Diagrams: Power, signal, and control wiring.

C. Field quality-control test reports.

D. Operation and Maintenance Data: For enclosed controllers to include in emergency, operation, and maintenance manuals. In addition to items specified in Division 01 Section "Operation and Maintenance Data," include the following:
   1. Routine maintenance requirements for enclosed controllers and all installed components.

E. Load-Current and Overload-Relay Heater List: Compile after motors have been installed and arrange to demonstrate that selection of heaters suits actual motor nameplate full-load currents.

1.3 QUALITY ASSURANCE

A. Source Limitations: Obtain enclosed controllers of a single type through one source from a single manufacturer.

B. Electrical Components, Devices, and Accessories: Listed and labeled as defined in NFPA 70, Article 100, by a testing agency acceptable to authorities having jurisdiction, and marked for intended use.

C. Comply with NFPA 70.

D. Product Selection for Restricted Space: Drawings indicate maximum dimensions for enclosed controllers, minimum clearances between enclosed controllers, and for adjacent surfaces and other items. Comply with indicated maximum dimensions and clearances.

1.4 DELIVERY, STORAGE, AND HANDLING

A. Store enclosed controllers indoors in clean, dry space with uniform temperature to prevent condensation. Protect enclosed controllers from exposure to dirt, fumes, water, corrosive substances, and physical damage.

B. If stored in areas subject to weather, cover enclosed controllers to protect them from weather, dirt, dust, corrosive substances, and physical damage. Remove loose packing and flammable materials from inside controllers; install electric heating of sufficient wattage to prevent condensation.

1.5 COORDINATION

A. Coordinate layout and installation of enclosed controllers with other construction including conduit, piping, equipment, and adjacent surfaces. Maintain required workspace clearances and required clearances for equipment access doors and panels.

B. Coordinate installation of roof curbs, equipment supports, and roof penetrations.

C. Coordinate features of enclosed controllers and accessory devices with pilot devices and control circuits to which they connect.

D. Coordinate features, accessories, and functions of each enclosed controller with ratings and characteristics of supply circuit, motor, required control sequence, and duty cycle of motor and load.

PART 2 - PRODUCTS

2.1 ACROSS-THE-LINE ENCLOSED CONTROLLERS

A. Manual Controller: NEMA ICS 2, general purpose, Class A, with "quick-make, quick-break" toggle or pushbutton action, and marked to show whether unit is "OFF," "ON," or "TRIPPED."

2.2 ENCLOSURES

A. Description: Flush- or surface-mounting cabinets as indicated. NEMA 250, Type 1, unless otherwise indicated to comply with environmental conditions at installed location.
   1. Outdoor Locations: NEMA 250, Type 3R.
   2. Other Wet or Damp Indoor Locations: NEMA 250, Type 4.

2.3 ACCESSORIES

A. Devices shall be factory installed in controller enclosure, unless otherwise indicated.

2.4 FACTORY FINISHES

A. Finish: Manufacturer's standard paint applied to factory-assembled and -tested enclosed controllers before shipping.

PART 3 - EXECUTION

3.1 EXAMINATION

A. Examine areas and surfaces to receive enclosed controllers for compliance with requirements, installation tolerances, and other conditions affecting performance.
   1. Proceed with installation only after unsatisfactory conditions have been corrected.

3.2 APPLICATIONS

A. Select features of each enclosed controller to coordinate with ratings and characteristics of supply circuit and motor; required control sequence; duty cycle of motor, controller, and load; and configuration of pilot device and control circuit affecting controller functions.

B. Select horsepower rating of controllers to suit motor controlled.

3.3 INSTALLATION

A. For control equipment at walls, bolt units to wall or mount on lightweight structural-steel channels bolted to wall. For controllers not at walls, provide freestanding racks complying with Division 26 Section "Hangers and Supports for Electrical Systems."

3.4 IDENTIFICATION

A. Identify enclosed controller, components, and control wiring according to Division 26 Section "Identification for Electrical Systems."

3.5 CONTROL WIRING INSTALLATION

A. Install wiring between enclosed controllers according to Division 26 Section "Low-Voltage Electrical Power Conductors and Cables."

3.6 FIELD QUALITY CONTROL

A. Perform the following field tests and inspections and prepare test reports:
   1. Perform each electrical test and visual and mechanical inspection, except optional tests, stated in NETA ATS, "Motor Control - Motor Starters." Certify compliance with test parameters.
   2. Correct malfunctioning units on-site, where possible, and retest to demonstrate compliance; otherwise, replace with new units and retest.

3.7 ADJUSTING

A. Install melting thermal overloads sized for the specific motor name plate rating.

END OF SECTION 262913

PART 1 - GENERAL

1.1 SUMMARY

A. This Section includes TVSSs for low-voltage power equipment.

1.2 DEFINITIONS

A. ATS: Acceptance Testing Specifications.

B. SVR: Suppressed voltage rating.

C. TVSS: Transient voltage surge suppressor.

1.3 SUBMITTALS

A. Product Data: For each type of product indicated. Include rated capacities, operating weights, operating characteristics, furnished specialties, and accessories.

B. Product Certificates: For transient voltage suppression devices, signed by product manufacturer certifying compliance with the following standards:
1. UL 1283.
2. UL 1449.

C. Operation and Maintenance Data: For transient voltage suppression devices to include in emergency, operation, and maintenance manuals.

D. Warranties: Special warranties specified in this Section.

1.4 QUALITY ASSURANCE

A. Source Limitations: Obtain suppression devices and accessories through one source from a single manufacturer.

B. Product Options: Drawings indicate size, dimensional requirements, and electrical performance of suppressors and are based on the specific system indicated.

C. Electrical Components, Devices, and Accessories: Listed and labeled as defined in NFPA 70, Article 100, by a testing agency acceptable to authorities having jurisdiction, and marked for intended use.

D. Comply with IEEE C62.41, "IEEE Guide for Surge Voltages in Low Voltage AC Power Circuits," and test devices according to IEEE C62.45, "IEEE Guide on Surge Testing for Equipment Connected to Low-Voltage AC Power Circuits."

E. Comply with NEMA LS 1, "Low Voltage Surge Protection Devices."

F. Comply with UL 1283, "Electromagnetic Interference Filters," and UL 1449, "Transient Voltage Surge Suppressors."

1.5 PROJECT CONDITIONS

A. Service Conditions: Rate surge protection devices for continuous operation under the following conditions, unless otherwise indicated:
   1. Maximum Continuous Operating Voltage: Not less than 115 percent of nominal system operating voltage.
   2. Operating Temperature: 30 to 120 deg F.
   3. Humidity: 0 to 85 percent, noncondensing.
   4. Altitude: Less than 20,000 feet above sea level.

1.6 COORDINATION

A. Coordinate location of field-mounted surge suppressors to allow adequate clearances for maintenance.

1.7 WARRANTY

A. Special Warranty: Manufacturer's standard form in which manufacturer agrees to repair or replace components of surge suppressors that fail in materials or workmanship within five years from date of Substantial Completion.

PART 2 - PRODUCTS

2.1 SERVICE ENTRANCE SUPPRESSORS

A. Surge Protection Device Description: Modular design with field-replaceable modules, sine-wave-tracking type with the following features and accessories:
   1. Fabrication using bolted compression lugs for internal wiring.
   2. Integral disconnect switch.
   3. Arrangement with copper bus bars and for bolted connections to phase buses, neutral bus, and ground bus.
   4. LED indicator lights for power and protection status.
   5. Audible alarm, with silencing switch, to indicate when protection has failed.
   6. One set of dry contacts rated at 5 A and 250-V ac, for remote monitoring of protection status. Coordinate with building power monitoring and control system.
   7. Surge-event operations counter.

B. Peak Single-Impulse Surge Current Rating: 240 kA per phase.

C. Connection Means: Permanently wired.

D. Protection modes and UL 1449 SVR for grounded wye circuits with voltages of 208Y/120, 3-phase, 4-wire circuits shall be as follows:
   1. Line to Neutral: 400 V for 208Y/120.
   2. Line to Ground: 400 V for 208Y/120.

2.2 Neutral to Ground: 400 V for 208Y/120.

2.3 PANELBOARD SUPPRESSORS

A. Surge Protection Device Description: Modular design with field-replaceable modules, sine-wave-tracking type with the following features and accessories:
   1. Fabrication using bolted compression lugs for internal wiring.
   2. Integral disconnect switch.
   3. Arrangement with copper bus bars and for bolted connections to phase buses, neutral bus, and ground bus.
   4. LED indicator lights for power and protection status.
   5. Audible alarm, with silencing switch, to indicate when protection has failed.
   6. One set of dry contacts rated at 5 A and 250-V ac, for remote monitoring of protection status. Coordinate with building power monitoring and control system.
   7. Surge-event operations counter.

B. Peak Single-Impulse Surge Current Rating: 120 kA per phase.

C. Connection Means: Permanently wired.

D. Protection modes and UL 1449 SVR for grounded wye circuits with voltages of 208Y/120, 3-phase, 4-wire circuits shall be as follows:
   1. Line to Neutral: 400 V for 208Y/120.
   2. Line to Ground: 400 V for 208Y/120.
   3. Neutral to Ground: 400 V for 208Y/120.

2.4 ENCLOSURES

A. Integral to the enclosure of the device it is serving.

PART 3 - EXECUTION

3.1 INSTALLATION OF SURGE PROTECTION DEVICES

A. Factory Mounted on the load side of the device.

3.2 FIELD QUALITY CONTROL

A. Testing: Perform the following field tests and inspections and prepare test reports:

1. Complete startup checks according to manufacturer's written instructions.

B. Remove and replace malfunctioning units and retest as specified above.

3.3 DEMONSTRATION

A. Engage a factory-authorized service representative to train Owner's maintenance personnel to adjust, operate, and maintain transient voltage suppression devices.

END OF SECTION 264313

PART 1 - GENERAL

1.1 SUMMARY

A. Section Includes:
   1. Interior lighting fixtures, lamps, and ballasts.
   2. Emergency lighting units.
   3. Exit signs.
   4. Lighting fixture supports.

1.2 DEFINITIONS

A. BF: Ballast factor.

B. CCT: Correlated color temperature.

C. CRI: Color-rendering index.

D. LER: Luminaire efficacy rating.

E. Lumen: Measured output of lamp and luminaire, or both.

F. Luminaire: Complete lighting fixture, including ballast housing if provided.

1.3 SUBMITTALS

A. Product Data: For each type of lighting fixture, arranged in order of fixture designation. Include data on features, accessories, finishes, and the following:
   1. Physical description of lighting fixture including dimensions.
   2. Emergency lighting units including battery and charger.
   3. Ballast, including BF.
   4. Energy-efficiency data.
   5. Life, output (lumens, CCT, and CRI), and energy-efficiency data for lamps.
   6. Photometric data and adjustment factors based on laboratory tests, complying with IESNA Lighting Measurements Testing & Calculation Guides, of each lighting fixture type. The adjustment factors shall be for lamps, ballasts, and accessories identical to those indicated for the lighting fixture as applied in this Project.
      a. Manufacturer Certified Data: Photometric data shall be certified by a manufacturer's laboratory with a current accreditation under the National Voluntary Laboratory Accreditation Program for Energy Efficient Lighting Products.

B. Installation instructions.

C. Product Certificates: For each type of ballast for bi-level controlled fixtures from manufacturer.

D. Field quality-control reports.

E. Operation and Maintenance Data: For lighting equipment and fixtures to include in emergency, operation, and maintenance manuals.
   1. Provide a list of all lamp types used on Project; use ANSI and manufacturers' codes.

F. Warranty: Sample of warranty.

1.4 QUALITY ASSURANCE

A. Luminaire Photometric Data Testing Laboratory Qualifications: Provided by manufacturers' laboratories that are accredited under the National Volunteer Laboratory Accreditation Program for Energy Efficient Lighting Products.

B. Electrical Components, Devices, and Accessories: Listed and labeled as defined in NFPA 70, by a qualified testing agency, and marked for intended location and application.

C. Comply with NFPA 70.

1.5 COORDINATION

A. Coordinate layout and installation of lighting fixtures and suspension system with other construction that penetrates ceilings or is supported by them, including HVAC equipment, fire-suppression system, and partition assemblies.

1.6 WARRANTY

A. Warranty for Emergency Lighting Batteries: Manufacturer's standard form in which manufacturer of battery-powered emergency lighting unit agrees to repair or replace components of rechargeable batteries that fail in materials or workmanship within specified warranty period.
   1. Warranty Period for Emergency Lighting Unit Batteries: Five years from date of Substantial Completion. Full warranty shall apply for first year, and prorated warranty for the remaining four years.
   2. Warranty Period for Emergency Fluorescent Ballast and Self-Powered Exit Sign Batteries: Five years from date of Substantial Completion. Full warranty shall apply for first year, and prorated warranty for the remaining four years.

1.7 EXTRA MATERIALS

A. Furnish extra materials that match products installed and that are packaged with protective covering for storage and identified with labels describing contents.
   1. Lamps: 10 for every 100 of each type and rating installed. Furnish at least one of each type.
   2. Plastic Diffusers and Lenses: One for every 100 of each type and rating installed. Furnish at least one of each type.
   3. Fluorescent-fixture-mounted, emergency battery pack: One for every 20 emergency lighting unit.
   4. Ballasts: One for every 100 of each type and rating installed. Furnish at least one of each type.
   5. Globes and Guards: One for every 20 of each type and rating installed. Furnish at least one of each type.

PART 2 - PRODUCTS

2.1 MANUFACTURERS

A. Products: Subject to compliance with requirements, provide one of the products indicated on Drawings.

2.2 GENERAL REQUIREMENTS FOR LIGHTING FIXTURES AND COMPONENTS

A. Recessed Fixtures: Comply with NEMA LE 4 for ceiling compatibility for recessed fixtures.

B. Fluorescent Fixtures: Comply with UL 1598. Where LER is specified, test according to NEMA LE 5 and NEMA LE 5A as applicable.

C. Metal Parts: Free of burrs and sharp corners and edges.

D. Sheet Metal Components: Steel unless otherwise indicated. Form and support to prevent warping and sagging.

E. Doors, Frames, and Other Internal Access: Smooth operating, free of light leakage under operating conditions, and designed to permit relamping without use of tools. Designed to prevent doors, frames, lenses, diffusers, and other components from falling accidentally during relamping and when secured in operating position.

F. Diffusers and Globes:
   1. Acrylic Lighting Diffusers: 100 percent virgin acrylic plastic. High resistance to yellowing and other changes due to aging, exposure to heat, and UV radiation.
      a. Lens Thickness: At least 0.125 inch minimum unless otherwise indicated.
      b. UV stabilized.
   2. Glass: Annealed crystal glass unless otherwise indicated.

G. Factory-Applied Labels: Comply with UL 1598. Include recommended lamps and ballasts. Labels shall be located where they will be

readily visible to service personnel, but not seen from normal viewing angles when lamps are in place.
1. Label shall include the following lamp and ballast characteristics:
   a. "USE ONLY" and include specific lamp type.
   b. Lamp diameter code (T-8, etc.), tube configuration (twin, quad, triple, etc.), base type, and nominal wattage for fluorescent and compact fluorescent luminaires.
   c. Start type (preheat, rapid start, instant start, etc.) for fluorescent and compact fluorescent luminaires.
   d. ANSI ballast type (M98, M57, etc.) for HID luminaires.
   e. CCT and CRI for all luminaires.

2.3 BALLASTS FOR LINEAR FLUORESCENT LAMPS

A. General Requirements for Electronic Ballasts:
1. Comply with UL 935 and with ANSI C82.11.
2. Designed for type and quantity of lamps served.
3. Ballasts shall be designed for full light output unless another BF, dimmer, or bi-level control is indicated.
4. Sound Rating: Class A.
5. Total Harmonic Distortion Rating: Less than 10 percent.
6. Transient Voltage Protection: IEEE C62.41.1 and IEEE C62.41.2, Category A or better.
7. Operating Frequency: 42 kHz or higher.
8. Lamp Current Crest Factor: 1.7 or less.
9. BF: 0.88 or higher.
10. Power Factor: 0.95 or higher.

B. Luminaires controlled by occupancy sensors shall have programmed-start ballasts.

C. Electronic Rapid-Start Ballasts for T8 Lamps: Comply with ANSI C82.11.,
1. Ballast Manufacturer Certification: Indicated by label.

D. Ballasts for Low-Temperature Environments:
1. Temperatures 0 Deg F and Higher: Electronic type rated for 0 deg F starting and operating temperature with indicated lamp types.

2.4 BALLASTS FOR COMPACT FLUORESCENT LAMPS

A. Description: Electronic-rapid-start type, complying with UL 935 and with ANSI C 82.11, designed for type and quantity of lamps indicated. Ballast shall be designed for full light output.
1. Lamp end-of-life detection and shutdown circuit.
2. Automatic lamp starting after lamp replacement.
3. Sound Rating: Class A.
4. Total Harmonic Distortion Rating: Less than 20 percent.
5. Transient Voltage Protection: IEEE C62.41.1 and IEEE C62.41.2, Category A or better.
6. Operating Frequency: 20 kHz or higher.

7. Lamp Current Crest Factor: 1.7 or less.
8. BF: 0.95 or higher unless otherwise indicated.
9. Power Factor: 0.95 or higher.
10. Interference: Comply with 47 CFR 18, Ch. 1, Subpart C, for limitations on electromagnetic and radio-frequency interference for nonconsumer equipment.

2.5 EMERGENCY FLUORESCENT POWER UNIT

A. Internal Type: Self-contained, modular, battery-inverter unit, factory mounted within lighting fixture body and compatible with ballast. Comply with UL 924.
   1. Emergency Connection: Operate fluorescent lamp(s) with a lumen output as indicated on the drawings continuously. Connect unswitched circuit to battery-inverter unit and switched circuit to fixture ballast.
   2. Nightlight Connection: Operate one fluorescent lamp continuously.
   3. Test Push Button and Indicator Light: Visible and accessible without opening fixture or entering ceiling space.
      a. Push Button: Push-to-test type, in unit housing, simulates loss of normal power and demonstrates unit operability.
      b. Indicator Light: LED indicates normal power on. Normal glow indicates trickle charge; bright glow indicates charging at end of discharge cycle.
   4. Battery: Sealed, maintenance-free, nickel-cadmium type.
   5. Charger: Fully automatic, solid-state, constant-current type with sealed power transfer relay.

2.6 EXIT SIGNS

A. General Requirements for Exit Signs: Comply with UL 924; for sign colors, visibility, luminance, and lettering size, comply with authorities having jurisdiction.

B. Internally Lighted Signs:
   1. Lamps for AC Operation: LEDs, 50,000 hours minimum rated lamp life.
   2. Self-Powered Exit Signs (Battery Type): Integral automatic charger in a self-contained power pack.
      a. Battery: Sealed, maintenance-free, nickel-cadmium type.
      b. Charger: Fully automatic, solid-state type with sealed transfer relay.
      c. Operation: Relay automatically energizes lamp from battery when circuit voltage drops to 80 percent of nominal voltage or below. When normal voltage is restored, relay disconnects lamps from battery, and battery is automatically recharged and floated on charger.
      d. Test Push Button: Push-to-test type, in unit housing, simulates loss of normal power and demonstrates unit operability.

e. LED Indicator Light: Indicates normal power on. Normal glow indicates trickle charge; bright glow indicates charging at end of discharge cycle.

2.7 EMERGENCY LIGHTING UNITS

A. General Requirements for Emergency Lighting Units: Self-contained units complying with UL 924.
   1. Battery: Sealed, maintenance-free, lead-acid type.
   2. Charger: Fully automatic, solid-state type with sealed transfer relay.
   3. Operation: Relay automatically turns lamp on when power-supply circuit voltage drops to 80 percent of nominal voltage or below. Lamp automatically disconnects from battery when voltage approaches deep-discharge level. When normal voltage is restored, relay disconnects lamps from battery, and battery is automatically recharged and floated on charger.
   4. Test Push Button: Push-to-test type, in unit housing, simulates loss of normal power and demonstrates unit operability.
   5. LED Indicator Light: Indicates normal power on. Normal glow indicates trickle charge; bright glow indicates charging at end of discharge cycle.
   6. Wire Guard: Heavy-chrome-plated wire guard protects lamp heads or fixtures.

2.8 FLUORESCENT LAMPS

A. T8 rapid-start lamps, rated 32 W maximum, nominal length of 48 inches, 2800 initial lumens (minimum), CRI 80 (minimum), color temperature as noted, and average rated life 20,000 hours unless otherwise indicated.

2.9 LIGHTING FIXTURE SUPPORT COMPONENTS

A. Comply with Division 26 Section "Hangers and Supports for Electrical Systems" for channel- and angle-iron supports and nonmetallic channel and angle supports.

B. Single-Stem Hangers: 1/2-inch steel tubing with swivel ball fittings and ceiling canopy. Finish same as fixture.

C. Twin-Stem Hangers: Two, 1/2-inch steel tubes with single canopy designed to mount a single fixture. Finish same as fixture.

D. Wires: ASTM A 641/A 641M, Class 3, soft temper, zinc-coated steel, 12 gage.

E. Wires for Humid Spaces: ASTM A 580/A 580M, Composition 302 or 304, annealed stainless steel, 12 gage.

F. Rod Hangers: 3/16-inch minimum diameter, cadmium-plated, threaded steel rod.

PART 3 - EXECUTION

3.1 INSTALLATION

A. Lighting fixtures:
   1. Set level, plumb, and square with ceilings and walls unless otherwise indicated.
   2. Install lamps in each luminaire.

B. Temporary Lighting: If it is necessary, and approved by Architect, to use permanent luminaires for temporary lighting, install and energize the minimum number of luminaires necessary. When construction is sufficiently complete, remove the temporary luminaires, disassemble, clean thoroughly, install new lamps, and reinstall.

C. Remote Mounting of Ballasts: Distance between the ballast and fixture shall not exceed that recommended by ballast manufacturer. Verify, with ballast manufacturers, maximum distance between ballast and luminaire.

D. Lay-in Ceiling Lighting Fixtures Supports: Use grid as a support element.
   1. Install ceiling support system rods or wires for each fixture. Locate not more than 6 inches from lighting fixture corners.
   2. Support Clips: Fasten to lighting fixtures and to ceiling grid members at or near each fixture corner with clips that are UL listed for the application.
   3. Fixtures of Sizes Less Than Ceiling Grid: Install as indicated on reflected ceiling plans or center in acoustical panel, and support fixtures independently with at least two 3/4-inch metal channels spanning and secured to ceiling tees.

E. Suspended Lighting Fixture Support:
   1. Pendants and Rods: Where longer than 48 inches, brace to limit swinging.
   2. Stem-Mounted, Single-Unit Fixtures: Suspend with twin-stem hangers.
   3. Continuous Rows: Use tubing or stem for wiring at one point and tubing or rod for suspension for each unit length of fixture chassis, including one at each end.
   4. Do not use grid as support for pendant luminaires. Connect support wires or rods to building structure.

F. Connect wiring according to Division 26 Section "Low-Voltage Electrical Power Conductors and Cables."

3.2 IDENTIFICATION

A. Install labels with panel and circuit numbers on concealed junction and outlet boxes. Comply with requirements for identification specified in Division 26 Section "Identification for Electrical Systems."

3.3 FIELD QUALITY CONTROL

A. Test for Emergency Lighting: Interrupt power supply to demonstrate proper operation. Verify transfer from normal power to battery and retransfer to normal.

B. Prepare a written report of tests, inspections, observations, and verifications indicating and interpreting results. If adjustments are made to lighting system, retest to demonstrate compliance with standards.

3.4 STARTUP SERVICE

A. Burn-in all lamps that require specific aging period to operate properly, prior to occupancy by Owner. Burn-in fluorescent and compact fluorescent lamps intended to be dimmed, for at least 100 hours at full voltage.

3.5 ADJUSTING

A. Occupancy Adjustments: When requested within 12 months of date of Substantial Completion, provide on-site assistance in adjusting aimable luminaires to suit actual occupied conditions. Provide up to two visits to Project during other-than-normal occupancy hours for this purpose. Some of this work may be required after dark.
   1. Adjust aimable luminaires in the presence of Architect.

END OF SECTION 265100

PART 1 - GENERAL

1.1 SUMMARY

A. Section Includes:
1. Communications equipment coordination and installation.
2. Sleeves for pathways and cables.
3. Grout.
4. Common communications installation requirements.

1.2 DEFINITIONS

A. EPDM: Ethylene-propylene-diene terpolymer rubber.

B. NBR: Acrylonitrile-butadiene rubber.

1.3 SUBMITTALS

A. Product Data: For sleeve seals.

1.4 COORDINATION

A. Coordinate arrangement, mounting, and support of communications equipment:
1. To allow maximum possible headroom unless specific mounting heights that reduce headroom are indicated.
2. To provide for ease of disconnecting the equipment with minimum interference to other installations.
3. To allow right of way for piping and conduit installed at required slope.
4. So connecting pathways, cables, wireways, and cable trays will be clear of obstructions and of the working and access space of other equipment.

B. Coordinate installation of required supporting devices and set sleeves in cast-in-place concrete, masonry walls, and other structural components as they are constructed.

C. Coordinate location of access panels and doors for communications items that are behind finished surfaces or otherwise concealed.

D. Coordinate sleeve selection and application with selection and application of firestopping.

PART 2 - PRODUCTS

2.1 SLEEVES FOR PATHWAYS AND CABLES

A. Steel Pipe Sleeves: ASTM A 53/A 53M, Type E, Grade B, Schedule 40, galvanized steel, plain ends.

B. Cast-Iron Pipe Sleeves: Cast or fabricated "wall pipe," equivalent to ductile-iron pressure pipe, with plain ends and integral waterstop, unless otherwise indicated.

C. Sleeves for Rectangular Openings: Galvanized sheet steel.
   1. Minimum Metal Thickness:
      a. For sleeve cross-section rectangle perimeter less than 50 inches and no side more than 16 inches, thickness shall be 0.052 inch.
      b. For sleeve cross-section rectangle perimeter equal to, or more than, 50 inches and 1 or more sides equal to, or more than, 16 inches, thickness shall be 0.138 inch.

2.2 GROUT

A. Nonmetallic, Shrinkage-Resistant Grout: ASTM C 1107, factory-packaged, nonmetallic aggregate grout, noncorrosive, nonstaining, mixed with water to consistency suitable for application and a 30-minute working time.

PART 3 - EXECUTION

3.1 COMMON REQUIREMENTS FOR COMMUNICATIONS INSTALLATION

A. Comply with NECA 1.

B. Measure indicated mounting heights to bottom of unit for suspended items and to center of unit for wall-mounting items.

C. Headroom Maintenance: If mounting heights or other location criteria are not indicated, arrange and install components and equipment to provide maximum possible headroom consistent with these requirements.

D. Equipment: Install to facilitate service, maintenance, and repair or replacement of components of both communications equipment and other nearby installations. Connect in such a way as to facilitate future disconnecting with minimum interference with other items in the vicinity.

E. Right of Way: Give to piping systems installed at a required slope.

3.2 SLEEVE INSTALLATION FOR COMMUNICATIONS PENETRATIONS

A. Communications penetrations occur when pathways, cables, wireways, or cable trays penetrate concrete slabs, concrete or masonry walls, or fire-rated floor and wall assemblies.

B. Concrete Slabs and Walls: Install sleeves for penetrations unless core-drilled holes or formed openings are used. Install sleeves during erection of slabs and walls.

C. Use pipe sleeves unless penetration arrangement requires rectangular sleeved opening.

D. Fire-Rated Assemblies: Install sleeves for penetrations of fire-rated floor and wall assemblies unless openings compatible with firestop system used are fabricated during construction of floor or wall.

E. Cut sleeves to length for mounting flush with both surfaces of walls.

F. Extend sleeves installed in floors 2 inches above finished floor level.

G. Size pipe sleeves to provide 1/4-inch annular clear space between sleeve and pathway or cable, unless indicated otherwise.

H. Seal space outside of sleeves with grout for penetrations of concrete and masonry
   1. Promptly pack grout solidly between sleeve and wall so no voids remain. Tool exposed surfaces smooth; protect grout while curing.

I. Interior Penetrations of Non-Fire-Rated Walls and Floors: Seal annular space between sleeve and pathway or cable, using joint sealant appropriate for size, depth, and location of joint.

J. Fire-Rated-Assembly Penetrations: Maintain indicated fire rating of walls, partitions, ceilings, and floors at pathway and cable penetrations. Install sleeves and seal pathway and cable penetration sleeves with firestop materials.

K. Roof-Penetration Sleeves: Seal penetration of individual pathways and cables with flexible boot-type flashing units applied in coordination with roofing work.

L. Aboveground, Exterior-Wall Penetrations: Seal penetrations using steel pipe sleeves and mechanical sleeve seals. Select sleeve size to allow for 1-inch annular clear space between pipe and sleeve for installing mechanical sleeve seals.

M. Underground, Exterior-Wall Penetrations: Install cast-iron pipe sleeves. Size sleeves to allow for 1-inch annular clear space between pathway or cable and sleeve for installing mechanical sleeve seals.

3.3 FIRESTOPPING

A. Apply firestopping to penetrations of fire-rated floor and wall assemblies for communications installations to restore original fire-resistance rating of assembly.

END OF SECTION 270500

PART 1 - GENERAL

1.1 SUMMARY

A. Section Includes:
1. Telecommunications mounting elements.
2. Backboards.
3. Telecommunications equipment racks and cabinets.
4. Telecommunications service entrance pathways.
5. Grounding.

1.2 DEFINITIONS

A. Basket Cable Tray: A fabricated structure consisting of wire mesh bottom and side rails.

B. BICSI: Building Industry Consulting Service International.

C. LAN: Local area network.

D. RCDD: Registered Communications Distribution Designer.

1.3 SUBMITTALS

A. Product Data: For each type of product indicated. Include construction details, material descriptions, dimensions of individual components and profiles, and finishes for equipment racks and cabinets. Include rated capacities, operating characteristics, electrical characteristics, and furnished specialties and accessories.

B. Shop Drawings: For communications equipment room fittings. Include plans, elevations, sections, details, and attachments to other work.
1. Detail equipment assemblies and indicate dimensions, weights, loads, required clearances, method of field assembly, components, and location and size of each field connection.
2. Equipment Racks and Cabinets: Include workspace requirements and access for cable connections.
3. Grounding: Indicate location of grounding bus bar and its mounting detail showing standoff insulators and wall mounting brackets.

C. Qualification Data: For Installer, qualified layout technician, installation supervisor, and field inspector.

1.4 QUALITY ASSURANCE

A. Installer Qualifications: Cabling Installer must have personnel certified by the cabling system manufacturer.

1. Layout Responsibility: Preparation of Shop Drawings shall be under the direct supervision of the manufacturer's representative.
2. Installation Supervision: Installation shall be under the direct supervision of manufacturer's representative. The Installation Superviser shall be present at all times when Work of this Section is performed at Project site.
3. Field Inspector: Currently trained and certified by the cabling system manufacturer.

B. Electrical Components, Devices, and Accessories: Listed and labeled as defined in NFPA 70, by a qualified testing agency, and marked for intended location and application.

C. Telecommunications Pathways and Spaces: Comply with TIA/EIA-569-A.

D. Grounding: Comply with ANSI-J-STD-607-A.

1.5 PROJECT CONDITIONS

A. Environmental Limitations: Do not deliver or install equipment frames and cable trays until spaces are enclosed and weathertight, wet work in spaces is complete and dry, and work above ceilings is complete.

1.6 COORDINATION

A. Coordinate layout and installation of communications equipment with Owner's telecommunications and LAN equipment and service suppliers. Coordinate service entrance arrangement with local exchange carrier.
1. Meet jointly with telecommunications and LAN equipment suppliers, local exchange carrier representatives, and Owner to exchange information and agree on details of equipment arrangements and installation interfaces.
2. Record agreements reached in meetings and distribute them to other participants.
3. Adjust arrangements and locations of distribution frames, cross-connects, and patch panels in equipment rooms to accommodate and optimize arrangement and space requirements of telephone switch and LAN equipment.
4. Adjust arrangements and locations of equipment with distribution frames, cross-connects, and patch panels of cabling systems of other communications, electronic safety and security, and related systems that share space in the equipment room.

B. Coordinate location of power raceways and receptacles with locations of communications equipment requiring electrical power to operate.

PART 2 - PRODUCTS

2.1 PATHWAYS

A. General Requirements: Comply with TIA/EIA-569-A.

B. Cable Support: NRTL labeled. Cable support brackets shall be designed to prevent degradation of cable performance and pinch points that could damage cable. Cable tie slots fasten cable ties to brackets.
   1. Comply with NFPA 70 and UL 2043 for fire-resistant and low-smoke-producing characteristics.
   2. Support brackets with cable tie slots for fastening cable ties to brackets.
   3. Lacing bars, spools, J-hooks, and D-rings.
   4. Straps and other devices.

C. Conduit and Boxes: Comply with requirements in Division 26 Section "Raceway and Boxes for Electrical Systems." Flexible metal conduit shall not be used.
   1. Outlet boxes shall be no smaller than 2 inches wide, 3 inches high, and 2-1/2 inches deep.

2.2 BACKBOARDS

A. Backboards: Plywood, fire-retardant treated, 3/4 by 48 by 96 inches.

2.3 EQUIPMENT FRAMES

A. Manufacturers: Subject to compliance with requirements, provide products by one of the following:
   1. Panduit
   2. Chatsworth
   3. Systimax.
   4. Siemon Co. (The).

B. General Frame Requirements:
   1. Distribution Frames: Freestanding and wall-mounting, modular-steel units designed for telecommunications terminal support and coordinated with dimensions of units to be supported.
   2. Module Dimension: Width compatible with EIA 310 standard, 19-inch panel mounting.
   3. Finish: Manufacturer's standard, baked-polyester powder coat.

C. Wall Mounted Cabinets:
   1. Hinged and lockable front cover.
   2. Screened ventilation openings in the top and side of the enclosure.
   3. Cable access provisions in the top of the enclosure.
   4. Rack-mounted, 550-cfm fan with filter.

2.4 GROUNDING

A. Comply with requirements in Division 26 Section "Grounding and Bonding for Electrical Systems." for grounding conductors and connectors.

B. Telecommunications Main Bus Bar:
   1. Connectors: Mechanical type, cast silicon bronze, solderless compression-type wire terminals, and long-barrel, two-bolt connection to ground bus bar.
   2. Ground Bus Bar: Copper, minimum 1/4 inch thick by 4 inches wide with 9/32-inch holes spaced 1-1/8 inches apart.
   3. Stand-Off Insulators: Comply with UL 891 for use in switchboards, 600 V. Lexan or PVC, impulse tested at 5000 V.

C. Comply with ANSI-J-STD-607-A.

2.5 LABELING

A. Comply with TIA/EIA-606-A and UL 969 for a system of labeling materials, including label stocks, laminating adhesives, and inks used by label printers.

PART 3 - EXECUTION

3.1 GROUNDING

A. Install grounding according to BICSI TDMM, "Grounding, Bonding, and Electrical Protection" Chapter.

B. Comply with ANSI-J-STD-607-A.

C. Locate grounding bus bar to minimize the length of bonding conductors. Fasten to wall allowing at least 2-inch clearance behind the grounding bus bar. Connect grounding bus bar with a minimum No. 4 AWG grounding electrode conductor from grounding bus bar to suitable electrical building ground.

D. Bond metallic equipment to the grounding bus bar, using not smaller than No. 6 AWG equipment grounding conductor.
   1. Bond the shield of shielded cable to the grounding bus bar in communications rooms and spaces.

3.2 IDENTIFICATION

A. Identify system components, wiring, and cabling complying with TIA/EIA-606-A. Comply with requirements in Division 26 Section "Identification for Electrical Systems."Comply with requirements in Division 09 Section "Interior Painting" for painting backboards. For fire-resistant plywood, do not paint over manufacturer's label.

B. See Division 27 Section "Communications Horizontal Cabling" for additional identification requirements. See Evaluations for discussion of TIA/EIA standard as it applies to this Section.Paint and label colors for equipment identification shall comply with TIA/EIA-606-A for Class 2 level of administration including optional identification requirements of this standard.

C. Labels shall be preprinted or computer-printed type.

END OF SECTION 271100

PART 1 - GENERAL

1.1 SUMMARY

A. Section Includes:
1. Pathways.
2. UTP cabling.
3. Coaxial cable.
4. Cable connecting hardware, patch panels, and cross-connects.
5. Telecommunications outlet/connectors.
6. Cabling system identification products.
7. Cable management system.

1.2 DEFINITIONS

A. Cross-Connect: A facility enabling the termination of cable elements and their interconnection or cross-connection.

B. EMI: Electromagnetic interference.

C. IDC: Insulation displacement connector.

D. LAN: Local area network.

E. Outlet/Connectors: A connecting device in the work area on which horizontal cable or outlet cable terminates.

F. UTP: Unshielded twisted pair.

1.3 HORIZONTAL CABLING DESCRIPTION

A. Horizontal cable and its connecting hardware provide the means of transporting signals between the telecommunications outlet/connector and the horizontal cross-connect located in the communications equipment room. This cabling and its connecting hardware are called "permanent link," a term that is used in the testing protocols.
1. TIA/EIA-568-B.1 requires that a minimum of two telecommunications outlet/connectors be installed for each work area.
2. Horizontal cabling shall contain no more that one transition point or consolidation point between the horizontal cross-connect and the telecommunications outlet/connector.
3. Bridged taps and splices shall not be installed in the horizontal cabling.
4. Splitters shall not be installed as part of the optical fiber cabling.

B. A work area is approximately 100 sq. ft., and includes the components that extend from the telecommunications outlet/connectors to the station equipment.

C. The maximum allowable horizontal cable length is 295 feet. This maximum allowable length does not include an allowance for the length of 16 feet to the workstation equipment. The maximum allowable length does not include an allowance for the length of 16 feet in the horizontal cross-connect.

1.4 PERFORMANCE REQUIREMENTS

A. General Performance: Horizontal cabling system shall comply with transmission standards in TIA/EIA-568-B.1, when tested according to test procedures of this standard.

1.5 SUBMITTALS

A. Product Data: For each type of product indicated.
   1. For coaxial cable, include the following installation data for each type used:
      a. Nominal OD.
      b. Minimum bending radius.
      c. Maximum pulling tension.

B. Shop Drawings:
   1. System Labeling Schedules: Electronic copy of labeling schedules, in software and format selected by Owner.
   2. System Labeling Schedules: Electronic copy of labeling schedules that are part of the cabling and asset identification system of the software.
   3. Cabling administration drawings and printouts.
   4. Wiring diagrams to show typical wiring schematics, including the following:
      a. Cross-connects.
      b. Patch panels.
      c. Patch cords.
   5. Cross-connects and patch panels. Detail mounting assemblies, and show elevations and physical relationship between the installed components.

C. Qualification Data: For Installer, qualified layout technician, installation supervisor, and field inspector.

D. Source quality-control reports.

E. Field quality-control reports.

F. Maintenance Data: For splices and connectors to include in maintenance manuals.

1.6 QUALITY ASSURANCE

A. Installer Qualifications: Cabling Installer must have personnel certified by the cabling system manufacturer.

1. Layout Responsibility: Preparation of Shop Drawings and Cabling Administration Drawings by a certified manufacturer's representative.
2. Installation Supervision: Installation shall be under the direct supervision of Registered Technician, who shall be present at all times when Work of this Section is performed at Project site.
3. Testing Supervisor: Currently certified by the system manufacturer to supervise on-site testing.

B. Surface-Burning Characteristics: As determined by testing identical products according to ASTM E 84 by a qualified testing agency. Identify products with appropriate markings of applicable testing agency.
1. Flame-Spread Index: 25 or less.
2. Smoke-Developed Index: 50 or less.

C. Electrical Components, Devices, and Accessories: Listed and labeled as defined in NFPA 70, by a qualified testing agency, and marked for intended location and application.

D. Telecommunications Pathways and Spaces: Comply with TIA/EIA-569-A.

E. Grounding: Comply with ANSI-J-STD-607-A.

1.7 DELIVERY, STORAGE, AND HANDLING

A. Test cables upon receipt at Project site.
1. Test each pair of UTP cable for open and short circuits.

1.8 PROJECT CONDITIONS

A. Environmental Limitations: Do not deliver or install cables and connecting materials until wet work in spaces is complete and dry, and temporary HVAC system is operating and maintaining ambient temperature and humidity conditions at occupancy levels during the remainder of the construction period.

1.9 COORDINATION

A. Coordinate layout and installation of telecommunications pathways and cabling with Owner's telecommunications and LAN equipment and service suppliers.

B. Coordinate telecommunications outlet/connector locations with location of power receptacles at each work area.

1.10 EXTRA MATERIALS

A. Furnish extra materials that match products installed and that are packaged with protective covering for storage and identified with labels describing contents.

1. Patch-Panel Units: One of each type.
2. Connecting Blocks: One of each type.
3. Device Plates: One of each type.

PART 2 - PRODUCTS

2.1 PATHWAYS

A. General Requirements: Comply with TIA/EIA-569-A.

B. Cable Support: NRTL labeled for support of Category 6 cabling, designed to prevent degradation of cable performance and pinch points that could damage cable.
   1. Support brackets with cable tie slots for fastening cable ties to brackets.
   2. Lacing bars, spools, J-hooks, and D-rings.
   3. Straps and other devices.

C. Cable Trays:
   1. Manufacturers: Subject to compliance with requirements, provide products by one of the following:
      a. Cable Management Solutions, Inc.
      b. Cablofil Inc.
      c. Cooper B-Line, Inc.
      d. Cope - Tyco/Allied Tube & Conduit.
      e. GS Metals Corp.
   2. Cable Tray Materials: Metal, suitable for indoors, and protected against corrosion by electroplated zinc galvanizing, complying with ASTM B 633, Type 1, not less than 0.000472 inch thick.
      a. Basket Cable Trays: 12 inches wide and 4 inches deep. Wire mesh spacing shall not exceed 2 by 4 inches.
      b. Ladder Cable Trays: Nominally 18 inches wide, and a rung spacing of 12 inches.

D. Conduit and Boxes: Comply with requirements in Division 26 Section "Raceway and Boxes for Electrical Systems." Flexible metal conduit shall not be used.
   1. Outlet boxes shall be no smaller than 4-11/16″ square and 2-1/2 inches deep.

2.2 BACKBOARDS

A. Backboards: Plywood, fire-retardant treated,3/4 by 48 by 96 inches. Comply with requirements in Division 06 Section "Rough Carpentry" for plywood backing panels.

2.3 UTP CABLE

A. Manufacturers: Subject to compliance with requirements, provide products by one of the following:
   1. Belden-KRONE Inc.; Electronics Division.

2. SYSTIMAX Solutions; a CommScope, Inc. brand.
3. Panduit.

B. Description: 100-ohm, 4-pair UTP, formed into 25-pair, binder groups covered with a blue thermoplastic jacket.
1. Comply with ICEA S-90-661 for mechanical properties.
2. Comply with TIA/EIA-568-B.1 for performance specifications.
3. Comply with TIA/EIA-568-B.2, Category 6.
4. Listed and labeled by an NRTL acceptable to authorities having jurisdiction as complying with UL 444 and NFPA 70 for the following types:
a. Communications, Plenum Rated: Type CMP, complying with NFPA 262.
b. Communications, Riser Rated: Type CMR; or MPP, CMP, or MPR, complying with UL 1666.
c. Communications, Limited Purpose: Type CMX; or MPP, CMP, MPR, CMR, MP, MPG, CM, or CMG.
d. Multipurpose: Type MP or MPG; or MPP or MPR.
e. Multipurpose, Plenum Rated: Type MPP, complying with NFPA 262.
f. Multipurpose, Riser Rated: Type MPR or MPP, complying with UL 1666.

2.4 UTP CABLE HARDWARE

A. Manufacturers: Subject to compliance with requirements, provide products as noted on the drawings.

B. General Requirements for Cable Connecting Hardware: Comply with TIA/EIA-568-B.2, IDC type, with modules designed for punch-down caps or tools. Cables shall be terminated with connecting hardware of same category or higher.

C. Connecting Blocks: 110-style IDC for Category 6. Provide blocks for the number of cables terminated on the block, plus 25 percent spare. Integral with connector bodies, including plugs and jacks where indicated.

D. Cross-Connect: Modular array of connecting blocks arranged to terminate building cables and permit interconnection between cables.
1. Number of Terminals per Field: One for each conductor in assigned cables.

E. Patch Panel: Modular panels, flat plate style housing multiple-numbered jack units with IDC-type connectors at each jack for permanent termination of pair groups of installed cables.
1. Number of Jacks per Field: One for each four-pair UTP cable indicated.

F. Jacks and Jack Assemblies: Modular, color-coded, eight-position modular receptacle units with integral IDC-type terminals.

G. Patch Cords: Factory-made, four-pair cables in quantities and lengths as described in formulas on the drawings; terminated with eight-position modular plug at each end.
   1. Patch cords shall have bend-relief-compliant boots and color-coded icons to ensure Category 6 performance. Patch cords shall have latch guards to protect against snagging.
   2. Patch cords shall have color-coded boots for circuit identification.

2.5 COAXIAL CABLE

A. Manufacturers: Subject to compliance with requirements, provide products by one of the following:
   1. Alpha Wire Company.
   2. Belden CDT Inc.; Electronics Division.
   3. Coleman Cable, Inc.
   4. CommScope, Inc.

B. Cable Characteristics: Broadband type, recommended by cable manufacturer specifically for broadband data transmission applications. Coaxial cable and accessories shall have 75-ohm nominal impedance with a return loss of 20 dB maximum from 7 to 806 MHz.

C. RG-6/U (Plenum Rated): NFPA 70, Type CATV or CM.
   1. No. 16 AWG, solid, copper-covered steel conductor; gas-injected, foam-PE insulation.
   2. Double shielded with 100 percent aluminum-foil shield and 60 percent aluminum braid.
   3. Copolymer jacket.
   4. Suitable for indoor installations.

D. NFPA and UL compliance, listed and labeled by an NRTL acceptable to authorities having jurisdiction as complying with UL 1655 and with NFPA 70 "Radio and Television Equipment" and "Community Antenna Television and Radio Distribution" Articles. Types are as follows:
   1. CATV Cable: Type CATV.
   2. CATV Plenum Rated: Type CATVP, complying with NFPA 262.
   3. CATV Riser Rated: Type CATVR, complying with UL 1666.
   4. CATV Limited Rating: Type CATVX.

2.6 COAXIAL CABLE HARDWARE

A. Manufacturers: Subject to compliance with requirements, provide products by one of the following:
   1. Aim Electronics; a brand of Emerson Electric Co.
   2. Leviton Voice & Data Division.
   3. Panduit

B. Coaxial-Cable Connectors: As required by equipment supplier.

2.7 TELECOMMUNICATIONS OUTLET/CONNECTORS

A. Jacks: 100-ohm, balanced, twisted-pair connector; four-pair, eight-position modular. Comply with TIA/EIA-568-B.1.

B. Workstation Outlets: Four-port-connector assemblies mounted in single faceplate.
   1. Plastic Faceplate: High-impact plastic. Coordinate color with Division 26 Section "Wiring Devices."
   2. For use with snap-in jacks accommodating any combination of UTP, optical fiber, and coaxial work area cords.
      a. Flush mounting jacks, positioning the cord at a 45-degree angle.
   3. Legend: Snap-in, clear-label covers and machine-printed paper inserts.

2.8 GROUNDING

A. Comply with requirements in Division 26 Section "Grounding and Bonding for Electrical Systems" for grounding conductors and connectors.

B. Comply with ANSI-J-STD-607-A.

2.9 IDENTIFICATION PRODUCTS

A. Comply with TIA/EIA-606-A and UL 969 for labeling materials, including label stocks, laminating adhesives, and inks used by label printers.

B. Comply with requirements in Division 26 Section "Identification for Electrical Systems."

2.10 SOURCE QUALITY CONTROL

A. Factory test UTP and cables on reels according to TIA/EIA-568-B.1.

B. Factory test UTP cables according to TIA/EIA-568-B.2.

C. Factory-sweep test coaxial cables at frequencies from 5 MHz to 1 GHz. Sweep test shall test the frequency response, or attenuation over frequency, of a cable by generating a voltage whose frequency is varied through the specified frequency range and graphing the results.

D. Cable will be considered defective if it does not pass tests and inspections.

E. Prepare test and inspection reports.

PART 3 - EXECUTION

3.1 WIRING METHODS

A. Wiring Method: Install cables in raceways and cable trays except within consoles, cabinets, desks, and counters and except in accessible ceiling spaces, in attics, and in gypsum board partitions where unenclosed wiring method may be used. Conceal raceway and cables except in unfinished spaces.
   1. Install plenum cable in environmental air spaces, including plenum ceilings.
   2. Comply with requirements for raceways and boxes specified in Division 26 Section "Raceway and Boxes for Electrical Systems."

B. Wiring within Enclosures: Bundle, lace, and train cables to terminal points with no excess and without exceeding manufacturer's limitations on bending radii. Provide and use lacing bars and distribution spools.

3.2 INSTALLATION OF PATHWAYS

A. Cable Trays: Comply with NEMA VE 2 and TIA/EIA-569-A-7.

B. Comply with requirements for demarcation point, pathways, cabinets, and racks specified in Division 27 Section "Communications Equipment Room Fittings." Drawings indicate general arrangement of pathways and fittings.

C. Comply with TIA/EIA-569-A for pull-box sizing and length of conduit and number of bends between pull points.

D. Comply with requirements in Division 26 Section "Raceway and Boxes for Electrical Systems" for installation of conduits and wireways.

E. Install manufactured conduit sweeps and long-radius elbows whenever possible.

F. Pathway Installation in Communications Equipment Rooms:
   1. Position conduit ends adjacent to a corner on backboard where a single piece of plywood is installed, or in the corner of room where multiple sheets of plywood are installed around perimeter walls of room.
   2. Install cable trays to route cables if conduits cannot be located in these positions.
   3. Secure conduits to backboard when entering room from overhead.
   4. Extend conduits 3 inches above finished floor.
   5. Install metal conduits with grounding bushings and connect with grounding conductor to grounding system.

G. Backboards: Install backboards with 96-inch dimension vertical. Butt adjacent sheets tightly, and form smooth gap-free corners and joints.

3.3 INSTALLATION OF CABLES

A. Comply with NECA 1.

B. General Requirements for Cabling:
   1. Comply with TIA/EIA-568-B.1.
   2. Comply with BICSI ITSIM, Ch. 6, "Cable Termination Practices."
   3. Install 110-style IDC termination hardware unless otherwise indicated.
   4. Terminate conductors; no cable shall contain unterminated elements. Make terminations only at indicated outlets, terminals, cross-connects, and patch panels.
   5. Cables may not be spliced. Secure and support cables at intervals not exceeding 30 inches and not more than 6 inches from cabinets, boxes, fittings, outlets, racks, frames, and terminals.
   6. Install lacing bars to restrain cables, to prevent straining connections, and to prevent bending cables to smaller radii than minimums recommended by manufacturer.
   7. Bundle, lace, and train conductors to terminal points without exceeding manufacturer's limitations on bending radii, but not less than radii specified in BICSI ITSIM, "Cabling Termination Practices" Chapter. Install lacing bars and distribution spools.
   8. Do not install bruised, kinked, scored, deformed, or abraded cable. Do not splice cable between termination, tap, or junction points. Remove and discard cable if damaged during installation and replace it with new cable.
   9. Cold-Weather Installation: Bring cable to room temperature before dereeling. Heat lamps shall not be used for heating.
   10. In the communications equipment room, install a 10-foot- long service loop on each end of cable.
   11. Pulling Cable: Comply with BICSI ITSIM, Ch. 4, "Pulling Cable." Monitor cable pull tensions.

C. UTP Cable Installation:
   1. Comply with TIA/EIA-568-B.2.
   2. Do not untwist UTP cables more than 1/2 inch from the point of termination to maintain cable geometry.

D. Open-Cable Installation – ALLOWED ONLY WHEN ACCEPTED BY OWNER’S REPRESENTATIVE PRIOR TO INSTALLATION:
   1. Install cabling with horizontal and vertical cable guides in telecommunications spaces with terminating hardware and interconnection equipment.
   2. Suspend UTP cable not in a wireway or pathway a minimum of 8 inches above ceilings by cable supports not more than 48 inches apart.
   3. Cable shall not be run through structural members or in contact with pipes, ducts, or other potentially damaging items.

E. Group connecting hardware for cables into separate logical fields.

F. Separation from EMI Sources:
   1. Comply with BICSI TDMM and TIA/EIA-569-A for separating unshielded copper voice and data communication cable from potential EMI sources, including electrical power lines and equipment.

2. Separation between open communications cables or cables in nonmetallic raceways and unshielded power conductors and electrical equipment shall be as follows:
   a. Electrical Equipment Rating Less Than 2 kVA: A minimum of 5 inches.
   b. Electrical Equipment Rating between 2 and 5 kVA: A minimum of 12 inches.
   c. Electrical Equipment Rating More Than 5 kVA: A minimum of 24 inches.
3. Separation between communications cables in grounded metallic raceways and unshielded power lines or electrical equipment shall be as follows:
   a. Electrical Equipment Rating Less Than 2 kVA: A minimum of 2-1/2 inches.
   b. Electrical Equipment Rating between 2 and 5 kVA: A minimum of 6 inches.
   c. Electrical Equipment Rating More Than 5 kVA: A minimum of 12 inches.
4. Separation between communications cables in grounded metallic raceways and power lines and electrical equipment located in grounded metallic conduits or enclosures shall be as follows:
   a. Electrical Equipment Rating Less Than 2 kVA: No requirement.
   b. Electrical Equipment Rating between 2 and 5 kVA: A minimum of 3 inches.
   c. Electrical Equipment Rating More Than 5 kVA: A minimum of 6 inches.
5. Separation between Communications Cables and Electrical Motors and Transformers, 5 kVA or HP and Larger: A minimum of 48 inches.
6. Separation between Communications Cables and Fluorescent Fixtures: A minimum of 5 inches.

3.4 GROUNDING

A. Install grounding according to BICSI TDMM, "Grounding, Bonding, and Electrical Protection" Chapter.

B. Comply with ANSI-J-STD-607-A.

C. Locate grounding bus bar to minimize the length of bonding conductors. Fasten to wall allowing at least 2-inch clearance behind the grounding bus bar. Connect grounding bus bar with a minimum No. 4 AWG grounding electrode conductor from grounding bus bar to suitable electrical building ground.

D. Bond metallic equipment to the grounding bus bar, using not smaller than No. 6 AWG equipment grounding conductor.

3.5 IDENTIFICATION

A. Identify system components, wiring, and cabling complying with TIA/EIA-606-A. Comply with requirements for identification specified in Division 26 Section "Identification for Electrical Systems."

1. Administration Class: 1.
2. Color-code cross-connect fields. Apply colors to voice and data service backboards, connections, covers, and labels.

B. Comply with requirements in "Interior Painting" for painting backboards. For fire-resistant plywood, do not paint over manufacturer's label.

C. Paint and label colors for equipment identification shall comply with TIA/EIA-606-A for Class 2 level of administration, including optional identification requirements of this standard.

D. Cable Schedule: Post in prominent location in each equipment room and wiring closet. List incoming and outgoing cables and their designations, origins, and destinations. Protect with rigid frame and clear plastic cover. Furnish an electronic copy of final comprehensive schedules for Project.

E. Cabling Administration Drawings: Show building floor plans with cabling administration-point labeling. Identify labeling convention and show labels for telecommunications closets, backbone pathways and cables, terminal hardware and positions, horizontal cables, work areas and workstation terminal positions, grounding buses and pathways, and equipment grounding conductors. Follow convention of TIA/EIA-606-A. Furnish electronic record of all drawings, in software and format selected by Owner.

F. Cable and Wire Identification:
1. Label each cable within 4 inches of each termination and tap, where it is accessible in a cabinet or junction or outlet box, and elsewhere as indicated.
2. Each wire connected to building-mounted devices is not required to be numbered at device if color of wire is consistent with associated wire connected and numbered within panel or cabinet.
3. Exposed Cables and Cables in Cable Trays and Wire Troughs: Label each cable at intervals not exceeding 15 feet.
4. Label each terminal strip and screw terminal in each cabinet, rack, or panel.
   a. Individually number wiring conductors connected to terminal strips, and identify each cable or wiring group being extended from a panel or cabinet to a building-mounted device shall be identified with name and number of particular device as shown.
   b. Label each unit and field within distribution racks and frames.
5. Identification within Connector Fields in Equipment Rooms and Wiring Closets: Label each connector and each discrete unit of cable-terminating and connecting hardware. Where similar jacks and plugs are used for both voice and data communication cabling, use a different color for jacks and plugs of each service.

G. Labels shall be preprinted or computer-printed type with printing area and font color that contrasts with cable jacket color but still complies with requirements in TIA/EIA-606-A.
1. Cables use flexible vinyl or polyester that flex as cables are bent.

3.6 FIELD QUALITY CONTROL

A. Perform tests and inspections.

B. Tests and Inspections:
   1. Visually inspect UTP cable jacket materials for NRTL certification markings. Inspect cabling terminations in communications equipment rooms for compliance with color-coding for pin assignments, and inspect cabling connections for compliance with TIA/EIA-568-B.1.
   2. Visually confirm Category 6, marking of outlets, cover plates, outlet/connectors, and patch panels.
   3. Visually inspect cable placement, cable termination, grounding and bonding, equipment and patch cords, and labeling of all components.
   4. Test UTP backbone copper cabling for DC loop resistance, shorts, opens, intermittent faults, and polarity between conductors. Test operation of shorting bars in connection blocks. Test cables after termination but not cross-connection.
      a. Test instruments shall meet or exceed applicable requirements in TIA/EIA-568-B.2. Perform tests with a tester that complies with performance requirements in "Test Instruments (Normative)" Annex, complying with measurement accuracy specified in "Measurement Accuracy (Informative)" Annex. Use only test cords and adapters that are qualified by test equipment manufacturer for channel or link test configuration.
   5. UTP Performance Tests:
      a. Test for each outlet and MUTOA. Perform the following tests according to TIA/EIA-568-B.1 and TIA/EIA-568-B.2:
         1) Wire map.
         2) Length (physical vs. electrical, and length requirements).
         3) Insertion loss.
         4) Near-end crosstalk (NEXT) loss.
         5) Power sum near-end crosstalk (PSNEXT) loss.
         6) Equal-level far-end crosstalk (ELFEXT).
         7) Power sum equal-level far-end crosstalk (PSELFEXT).
         8) Return loss.
         9) Propagation delay.
         10) Delay skew.
   6. Final Verification Tests: Perform verification tests for UTP systems after the complete communications cabling and workstation outlet/connectors are installed.
      a. Data Tests: These tests assume the Information Technology Staff has a network installed and is available to assist with testing. Connect to the network interface device at the demarcation point. Log onto the network to ensure proper connection to the network.

C. Document data for each measurement. Data for submittals shall be printed in a summary report that is formatted similar to Table 10.1 in BICSI TDMM, or transferred from the instrument to the computer, saved as text files, and printed and submitted.

D. End-to-end cabling will be considered defective if it does not pass tests and inspections.

E. Prepare test and inspection reports.

3.7 DEMONSTRATION

A. Train Owner's maintenance personnel in cable-plant management operations, including changing signal pathways for different workstations, rerouting signals in failed cables, and keeping records of cabling assignments and revisions when extending wiring to establish new workstation outlets.

END OF SECTION 271500

PART 1 - GENERAL

1.1 SUMMARY

A. Section Includes:
1. Electronic safety and security equipment coordination and installation.
2. Sleeves for raceways and cables.
3. Grout.
4. Common electronic safety and security installation requirements.

1.2 DEFINITIONS

A. EPDM: Ethylene-propylene-diene terpolymer rubber.

B. NBR: Acrylonitrile-butadiene rubber.

1.3 COORDINATION

A. Coordinate arrangement, mounting, and support of electronic safety and security equipment:
1. To allow maximum possible headroom unless specific mounting heights that reduce headroom are indicated.
2. To provide for ease of disconnecting the equipment with minimum interference to other installations.
3. To allow right of way for piping and conduit installed at required slope.
4. So connecting raceways, cables and wireways will be clear of obstructions and of the working and access space of other equipment.

B. Coordinate installation of required supporting devices and set sleeves in cast-in-place concrete, masonry walls, and other structural components as they are constructed.

C. Coordinate location of access panels and doors for electronic safety and security items that are behind finished surfaces or otherwise concealed.

D. Coordinate sleeve selection and application with selection and application of firestopping.

PART 2 - PRODUCTS

2.1 SLEEVES FOR RACEWAYS AND CABLES

A. Steel Pipe Sleeves: ASTM A 53/A 53M, Type E, Grade B, Schedule 40, galvanized steel, plain ends.

B. Cast-Iron Pipe Sleeves: Cast or fabricated "wall pipe," equivalent to ductile-iron pressure pipe, with plain ends and integral waterstop, unless otherwise indicated.

C. Sleeves for Rectangular Openings: Galvanized sheet steel.
   1. Minimum Metal Thickness:
      a. For sleeve cross-section rectangle perimeter less than 50 inches and no side more than 16 inches, thickness shall be 0.052 inch.
      b. For sleeve cross-section rectangle perimeter equal to, or more than, 50 inches and 1 or more sides equal to, or more than, 16 inches, thickness shall be 0.138 inch.

2.2 GROUT

A. Nonmetallic, Shrinkage-Resistant Grout: ASTM C 1107, factory-packaged, nonmetallic aggregate grout, noncorrosive, nonstaining, mixed with water to consistency suitable for application and a 30-minute working time.

PART 3 - EXECUTION

3.1 COMMON REQUIREMENTS FOR ELECTRONIC SAFETY AND SECURITY INSTALLATION

A. Comply with NECA 1.

B. Measure indicated mounting heights to bottom of unit for suspended items and to center of unit for wall-mounting items.

C. Headroom Maintenance: If mounting heights or other location criteria are not indicated, arrange and install components and equipment to provide maximum possible headroom consistent with these requirements.

D. Equipment: Install to facilitate service, maintenance, and repair or replacement of components of both electronic safety and security equipment and other nearby installations. Connect in such a way as to facilitate future disconnecting with minimum interference with other items in the vicinity.

E. Right of Way: Give to piping systems installed at a required slope.

3.2 SLEEVE INSTALLATION FOR ELECTRONIC SAFETY AND SECURITY PENETRATIONS

A. Electronic safety and security penetrations occur when raceways, pathways, cables or wireways, penetrate concrete slabs, concrete or masonry walls, or fire-rated floor and wall assemblies.

B. Concrete Slabs and Walls: Install sleeves for penetrations unless core-drilled holes or formed openings are used. Install sleeves during erection of slabs and walls.

C. Use pipe sleeves unless penetration arrangement requires rectangular sleeved opening.

D. Fire-Rated Assemblies: Install sleeves for penetrations of fire-rated floor and wall assemblies unless openings compatible with firestop system used are fabricated during construction of floor or wall.

E. Cut sleeves to length for mounting flush with both surfaces of walls.

F. Extend sleeves installed in floors 2 inches above finished floor level.

G. Size pipe sleeves to provide 1/4-inch annular clear space between sleeve and raceway or cable, unless indicated otherwise.

H. Seal space outside of sleeves with grout for penetrations of concrete and masonry
   1. Promptly pack grout solidly between sleeve and wall so no voids remain. Tool exposed surfaces smooth; protect grout while curing.

I. Interior Penetrations of Non-Fire-Rated Walls and Floors: Seal annular space between sleeve and raceway or cable, using joint sealant appropriate for size, depth, and location of joint.

J. Fire-Rated-Assembly Penetrations: Maintain indicated fire rating of walls, partitions, ceilings, and floors at raceway and cable penetrations. Install sleeves and seal raceway and cable penetration sleeves with firestop materials.

K. Roof-Penetration Sleeves: Seal penetration of individual raceways and cables with flexible boot-type flashing units applied in coordination with roofing work.

L. Aboveground, Exterior-Wall Penetrations: Seal penetrations using steel pipe sleeves and mechanical sleeve seals. Select sleeve size to allow for 1-inch annular clear space between pipe and sleeve for installing mechanical sleeve seals.

M. Underground, Exterior-Wall Penetrations: Install cast-iron pipe sleeves. Size sleeves to allow for 1-inch annular clear space between raceway or cable and sleeve for installing mechanical sleeve seals.

3.3 FIRESTOPPING

A. Apply firestopping to penetrations of fire-rated floor and wall assemblies for electronic safety and security installations to restore original fire-resistance rating of assembly.

END OF SECTION 280500

PART 1 - GENERAL

1.1 SUMMARY

A. Section Includes:
1. RS-232 cabling.
2. RS-485 cabling.
3. Low-voltage control cabling.
4. Control-circuit conductors.
5. Fire alarm wire and cable.
6. Identification products.

1.2 DEFINITIONS

A. BICSI: Building Industry Consulting Service International.

B. EMI: Electromagnetic interference.

C. IDC: Insulation displacement connector.

D. Low Voltage: As defined in NFPA 70 for circuits and equipment operating at less than 50 V or for remote-control and signaling power-limited circuits.

E. Open Cabling: Passing telecommunications cabling through open space (e.g., between the studs of a wall cavity).

1.3 SUBMITTALS

A. Product Data: For each type of product indicated.

B. Field quality-control reports.

C. Maintenance Data: For wire and cable to include in maintenance manuals.

1.4 QUALITY ASSURANCE

A. Surface-Burning Characteristics: As determined by testing identical products according to ASTM E 84 by a qualified testing agency. Identify products with appropriate markings of applicable testing agency.
1. Flame-Spread Index: 25 or less.
2. Smoke-Developed Index: 50 or less.

B. Electrical Components, Devices, and Accessories: Listed and labeled as defined in NFPA 70, by a qualified testing agency, and marked for intended location and application.

1.5 DELIVERY, STORAGE, AND HANDLING

1.6 PROJECT CONDITIONS

A. Environmental Limitations: Do not deliver or install cables and connecting materials until wet work in spaces is complete and dry, and temporary HVAC system is operating and maintaining ambient temperature and humidity conditions at occupancy levels during the remainder of the construction period.

PART 2 - PRODUCTS

2.1 PATHWAYS

A. Support of Open Cabling: NRTL labeled for support of cabling, designed to prevent degradation of cable performance and pinch points that could damage cable.
   1. Support brackets with cable tie slots for fastening cable ties to brackets.
   2. Lacing bars, spools, J-hooks, and D-rings.
   3. Straps and other devices.

B. Conduit and Boxes: Comply with requirements in Division 26 Section "Raceway and Boxes for Electrical Systems." Flexible metal conduit shall not be used.
   1. Outlet boxes shall be no smaller than 2 inches wide, 3 inches high, and 2-1/2 inches deep.

2.2 BACKBOARDS

A. Backboards: Plywood, fire-retardant treated, 3/4 by 48 by 96 inches.

2.3 RS-232 CABLE

A. Plenum-Rated Cable: NFPA 70, Type CMP.
   1. Size and configuration as recommended by equipment supplier.
   2. Plastic insulation.
   3. Individual aluminum foil-polyester tape shielded pairs with 100 percent shield coverage.
   4. Plastic jacket.
   5. Pairs are cabled on common axis with No. 24 AWG, stranded (7x32) tinned copper drain wire.
   6. Flame Resistance: Comply with NFPA 262.

2.4 CONTROL-CIRCUIT CONDUCTORS

A. Class 1 Control Circuits: Stranded copper, Type THHN-THWN, in raceway complying with UL 83.

B. Class 2 Control Circuits: Stranded copper, Type THHN-THWN, in raceway or power-limited cable, concealed in building finishes complying with UL 83.

C. Class 3 Remote-Control and Signal Circuits: Stranded copper, Type TW or TF, complying with UL 83.

2.5 FIRE ALARM WIRE AND CABLE

A. General Wire and Cable Requirements: NRTL listed and labeled as complying with NFPA 70, Article 760.

B. Signaling Line Circuits: Twisted, shielded pair, not less than No. 18 AWG size as recommended by system manufacturer.
   1. Circuit Integrity Cable: Twisted shielded pair, NFPA 70, Article 760, Classification CI, for power-limited fire alarm signal service Type FPL. NRTL listed and labeled as complying with UL 1424 and UL 2196 for a 2-hour rating.

C. Non-Power-Limited Circuits: Solid-copper conductors with 600-V rated, 75 deg C, color-coded insulation.
   1. Low-Voltage Circuits: No. 18 AWG, minimum.
   2. Line-Voltage Circuits: No. 12 AWG, minimum.

2.6 IDENTIFICATION PRODUCTS

A. Comply with UL 969 for a system of labeling materials, including label stocks, laminating adhesives, and inks used by label printers.

B. Comply with requirements in Division 26 Section "Identification for Electrical Systems."

2.7 SOURCE QUALITY CONTROL

A. Factory test cables on reels.

B. Cable will be considered defective if it does not pass tests and inspections.

C. Prepare test and inspection reports.

PART 3 - EXECUTION

3.1 INSTALLATION OF PATHWAYS

A. Comply with TIA/EIA-569-A for pull-box sizing and length of conduit and number of bends between pull points.

B. Comply with requirements in Division 26 Section "Raceway and Boxes for Electrical Systems." for installation of conduits and wireways.

C. Install manufactured conduit sweeps and long-radius elbows whenever possible.

D. Pathway Installation in Equipment Rooms:
   1. Position conduit ends adjacent to a corner on backboard where a single piece of plywood is installed or in the corner of room where multiple sheets of plywood are installed around perimeter walls of room.
   2. Secure conduits to backboard when entering room from overhead.
   3. Extend conduits 3 inches above finished floor.
   4. Install metal conduits with grounding bushings and connect with grounding conductor to grounding system.

E. Backboards: Install backboards with 96-inch dimension vertical. Butt adjacent sheets tightly, and form smooth gap-free corners and joints.

3.2 INSTALLATION OF CONDUCTORS AND CABLES

A. Comply with NECA 1.

B. General Requirements for Cabling:
   1. Terminate all conductors; no cable shall contain unterminated elements. Make terminations only at indicated outlets, terminals, and cross-connect and patch panels.
   2. Cables may not be spliced. Secure and support cables at intervals not exceeding 30 inches and not more than 6 inches from cabinets, boxes, fittings, outlets, racks, frames, and terminals.
   3. Bundle, lace, and train conductors to terminal points without exceeding manufacturer's limitations on bending radii.
   4. Do not install bruised, kinked, scored, deformed, or abraded cable. Do not splice cable between termination, tap, or junction points. Remove and discard cable if damaged during installation and replace it with new cable.
   5. Cold-Weather Installation: Bring cable to room temperature before dereeling. Heat lamps shall not be used for heating.
   6. Pulling Cable: Comply with BICSI ITSIM, Ch. 4, "Pulling Cable." Monitor cable pull tensions.

C. Open-Cable Installation:
   1. Install cabling with horizontal and vertical cable guides in telecommunications spaces with terminating hardware and interconnection equipment.
   2. Suspend copper cable not in a wireway or pathway a minimum of 8 inches above ceilings by cable supports not more than 60 inches apart.
   3. Cable shall not be run through structural members or in contact with pipes, ducts, or other potentially damaging items.

D. Separation from EMI Sources:
   1. Comply with BICSI TDMM and TIA/EIA-569-A recommendations for separating unshielded copper voice and data communication cable from potential EMI sources, including electrical power lines and equipment.

2. Separation between open communications cables or cables in nonmetallic raceways and unshielded power conductors and electrical equipment shall be as follows:
   a. Electrical Equipment Rating Less Than 2 kVA: A minimum of 5 inches.
   b. Electrical Equipment Rating between 2 and 5 kVA: A minimum of 12 inches.
   c. Electrical Equipment Rating More Than 5 kVA: A minimum of 24 inches.
3. Separation between communications cables in grounded metallic raceways and unshielded power lines or electrical equipment shall be as follows:
   a. Electrical Equipment Rating Less Than 2 kVA: A minimum of 2-1/2 inches.
   b. Electrical Equipment Rating between 2 and 5 kVA: A minimum of 6 inches.
   c. Electrical Equipment Rating More Than 5 kVA: A minimum of 12 inches.
4. Separation between communications cables in grounded metallic raceways and power lines and electrical equipment located in grounded metallic conduits or enclosures shall be as follows:
   a. Electrical Equipment Rating Less Than 2 kVA: No requirement.
   b. Electrical Equipment Rating between 2 and 5 kVA: A minimum of 3 inches.
   c. Electrical Equipment Rating More Than 5 kVA: A minimum of 6 inches.
5. Separation between Cables and Electrical Motors and Transformers, 5 kVA or HP and Larger: A minimum of 48 inches.
6. Separation between Cables and Fluorescent Fixtures: A minimum of 5 inches.

3.3 FIRE ALARM WIRING INSTALLATION

A. Comply with NECA 1 and NFPA 72.

B. Wiring Method: Install wiring in metal raceway according to Division 26 Section "Raceway and Boxes for Electrical Systems" where exposed or subject to physical damage. Install plenum cable open utilizing bridle rings space no more than 5’-0” on center in accessible in environmental air spaces, including plenum ceilings.

C. Wiring Method:
   1. Cables and raceways used for fire alarm circuits, and equipment control wiring associated with the fire alarm system, may not contain any other wire or cable.
   2. Fire-Rated Cables: Use of 2-hour, fire-rated fire alarm cables, NFPA 70, Types MI and CI, is not permitted.
   3. Signaling Line Circuits: Power-limited fire alarm cables shall not be installed in the same cable or raceway as signaling line circuits.

D. Wiring within Enclosures: Separate power-limited and non-power-limited conductors as recommended by manufacturer. Install conductors parallel with or at right angles to sides and back of the enclosure. Bundle, lace, and train conductors to terminal points with no excess.

Connect conductors that are terminated, spliced, or interrupted in any enclosure associated with the fire alarm system to terminal blocks. Mark each terminal according to the system's wiring diagrams. Make all connections with approved crimp-on terminal spade lugs, pressure-type terminal blocks, or plug connectors.

E. Cable Taps: Use numbered terminal strips in junction, pull, and outlet boxes, cabinets, or equipment enclosures where circuit connections are made.

F. Color-Coding: Color-code fire alarm conductors differently from the normal building power wiring. Use one color-code for alarm circuit wiring and another for supervisory circuits. Color-code audible alarm-indicating circuits differently from alarm-initiating circuits. Use different colors for visible alarm-indicating devices. Paint fire alarm system junction boxes and covers red.

3.4 CONTROL-CIRCUIT CONDUCTORS

A. Minimum Conductor Sizes:
1. Class 1 remote-control and signal circuits, No. 14 AWG.
2. Class 2 low-energy, remote-control and signal circuits, No. 16 AWG.

3.5 GROUNDING

A. For low-voltage wiring and cabling, comply with requirements in Division 26 Section "Grounding and Bonding for Electrical Systems."

3.6 IDENTIFICATION

A. Identify system components, wiring, and cabling complying with TIA/EIA-606-A. Comply with requirements for identification specified in Division 26 Section "Identification for Electrical Systems."

3.7 FIELD QUALITY CONTROL

A. Tests and Inspections:
1. Visually inspect cable jacket materials for UL or third-party certification markings. Inspect cabling terminations to confirm color-coding, and inspect cabling connections.
2. Visually inspect cable placement, cable termination, grounding, bonding, equipment, and labeling of all components.

B. End-to-end cabling will be considered defective if it does not pass tests and inspections.

C. Prepare test and inspection reports.

END OF SECTION 280513

PART 1 - GENERAL

1.1 SUMMARY

A. Section Includes:
1. Fire-alarm control unit.
2. Manual fire-alarm boxes.
3. System smoke detectors.
4. Heat detectors.
5. Notification appliances.
6. Remote annunciator.
7. Addressable interface device.
8. Digital alarm communicator transmitter.

1.2 DEFINITIONS

A. LED: Light-emitting diode.

B. NICET: National Institute for Certification in Engineering Technologies.

1.3 SYSTEM DESCRIPTION

A. Noncoded, UL-certified addressable system, with multiplexed signal transmission, dedicated to fire-alarm service only.

1.4 PERFORMANCE REQUIREMENTS

1.5 SUBMITTALS

A. General Submittal Requirements:
1. Submittals shall be approved by authorities having jurisdiction prior to submitting them to Architect.
2. Shop Drawings shall be prepared by persons with the following qualifications:
a. Trained and certified by manufacturer in fire-alarm system design.
b. NICET-certified fire-alarm technician, Level III minimum.
c. Licensed or certified by authorities having jurisdiction.

B. Product Data: For each type of product indicated.

C. Shop Drawings: For fire-alarm system. Include plans, elevations, sections, details, and attachments to other work.
1. Comply with recommendations in the "Documentation" Section of the "Fundamentals of Fire Alarm Systems" Chapter in NFPA 72.
2. Include voltage drop calculations for notification appliance circuits.

3. Include battery-size calculations.
4. Include performance parameters and installation details for each detector, verifying that each detector is listed for complete range of air velocity, temperature, and humidity possible when air-handling system is operating.
5. Include plans, sections, and elevations of heating, ventilating, and air-conditioning ducts, drawn to scale and coordinating installation of duct smoke detectors and access to them. Show critical dimensions that relate to placement and support of sampling tubes, detector housing, and remote status and alarm indicators. Locate detectors according to manufacturer's written recommendations.
6. Include floor plans to indicate final outlet locations showing address of each addressable device. Show size and route of cable and conduits.

D. Qualification Data: For qualified Installer.

E. Field quality-control reports.

F. Operation and Maintenance Data: For fire-alarm systems and components to include in emergency, operation, and maintenance manuals. In addition to items specified in Division 01 Section "Operation and Maintenance Data," include the following:
1. Comply with the "Records" Section of the "Inspection, Testing and Maintenance" Chapter in NFPA 72.
2. Provide "Record of Completion Documents" according to NFPA 72 article "Permanent Records" in the "Records" Section of the "Inspection, Testing and Maintenance" Chapter.
3. Record copy of site-specific software.
4. Provide "Maintenance, Inspection and Testing Records" according to NFPA 72 article of the same name and include the following:
   a. Frequency of testing of installed components.
   b. Frequency of inspection of installed components.
   c. Requirements and recommendations related to results of maintenance.
   d. Manufacturer's user training manuals.
5. Manufacturer's required maintenance related to system warranty requirements.
6. Abbreviated operating instructions for mounting at fire-alarm control unit.
7. Copy of NFPA 25.

1.6 QUALITY ASSURANCE

A. Installer Qualifications: Personnel shall be trained and certified by manufacturer for installation of units required for this Project.

B. Source Limitations for Fire-Alarm System and Components: Obtain fire-alarm system from single source from single manufacturer. Components shall be compatible with, and operate as, an extension of existing system.

C. Electrical Components, Devices, and Accessories: Listed and labeled as defined in NFPA 70, by a qualified testing agency, and marked for intended location and application.

D. NFPA Certification: Obtain certification according to NFPA 72 by a UL-listed alarm company.

1.7 SOFTWARE SERVICE AGREEMENT

A. Comply with UL 864.

B. Technical Support: Beginning with Substantial Completion, provide software support for two years.

1.8 EXTRA MATERIALS

A. Furnish extra materials that match products installed and that are packaged with protective covering for storage and identified with labels describing contents.
   1. Lamps for Remote Indicating Lamp Units: Quantity equal to 10 percent of amount installed, but no fewer than 1 unit.
   2. Lamps for Strobe Units: Quantity equal to 10 percent of amount installed, but no fewer than 1 unit.
   3. Smoke Detectors, Fire Detectors: Quantity equal to 10 percent of amount of each type installed, but no fewer than 1 unit of each type.
   4. Detector Bases: Quantity equal to 2 percent of amount of each type installed, but no fewer than 1 unit of each type.
   5. Keys and Tools: One extra set for access to locked and tamper proofed components.
   6. Audible and Visual Notification Appliances: One of each type installed.
   7. Fuses: Two of each type installed in the system.

PART 2 - PRODUCTS

2.1 MANUFACTURERS

A. Manufacturers: Subject to compliance with requirements, provide products by one of the following:
   1. Basis-of-Design Product: Subject to compliance with requirements, provide product indicated on Drawings

2.2 SYSTEMS OPERATIONAL DESCRIPTION

A. Fire-alarm signal initiation shall be by one or more of the following devices and systems:
   1. Manual stations.
   2. Heat detectors.
   3. Smoke detectors.

4. Duct smoke detectors.
5. Automatic sprinkler system water flow.
6. Fire-extinguishing system operation.

B. Fire-alarm signal shall initiate the following actions:
1. Continuously operate alarm notification appliances.
2. Identify alarm at fire-alarm control unit and remote annunciators.
3. Transmit an alarm signal to the remote alarm receiving station.
4. Activate alarm communication system.
5. Switch heating, ventilating, and air-conditioning equipment controls to fire-alarm mode.
6. Record events in the system memory.

C. Supervisory signal initiation shall be by one or more of the following devices and actions:
1. Valve supervisory switch.

D. System trouble signal initiation shall be by one or more of the following devices and actions:
1. Open circuits, shorts, and grounds in designated circuits.
2. Opening, tampering with, or removing alarm-initiating and supervisory signal-initiating devices.
3. Loss of primary power at fire-alarm control unit.
4. Ground or a single break in fire-alarm control unit internal circuits.
5. Abnormal ac voltage at fire-alarm control unit.
6. Break in standby battery circuitry.
7. Failure of battery charging.
8. Abnormal position of any switch at fire-alarm control unit or annunciator.

E. System Trouble and Supervisory Signal Actions: Initiate notification appliance and annunciate at fire-alarm control unit and remote annunciators. Record the event on system printer.

2.3 FIRE-ALARM CONTROL UNIT

A. General Requirements for Fire-Alarm Control Unit:
1. Field-programmable, microprocessor-based, modular, power-limited design with electronic modules, complying with UL 864 and listed and labeled by an NRTL.
   a. System software and programs shall be held in flash electrically erasable programmable read-only memory (EEPROM), retaining the information through failure of primary and secondary power supplies.
   b. Include a real-time clock for time annotation of events on the event recorder and printer.
2. Addressable initiation devices that communicate device identity and status.
3. Addressable control circuits for operation of mechanical equipment.

B. Alphanumeric Display and System Controls: Arranged for interface between human operator at fire-alarm control unit and addressable system components including annunciation and supervision. Display alarm, supervisory, and component status messages and the programming and control menu.
   1. Annunciator and Display: Liquid-crystal type, 2 line(s) of 40 characters, minimum.
   2. Keypad: Arranged to permit entry and execution of programming, display, and control commands and to indicate control commands to be entered into the system for control of smoke-detector sensitivity and other parameters.

C. Circuits:
   1. Initiating Device, Notification Appliance, and Signaling Line Circuits: NFPA 72, Class A.
      a. Initiating Device Circuits: Style D.
      b. Notification Appliance Circuits: Style Z.
      c. Signaling Line Circuits: Style 2.
      d. Install no more than 50 addressable devices on each signaling line circuit.
   2. Initiating Device, Notification Appliance, and Signaling Line Circuits: NFPA 72, Class B.
      a. Initiating Device Circuits: Style A.
      b. Notification Appliance Circuits: Style W.
      c. Signaling Line Circuits: Style 0.5.
      d. Install no more than 50 addressable devices on each signaling line circuit.
   3. Serial Interfaces: Two RS-232 ports for printers.

D. Transmission to Remote Alarm Receiving Station: Automatically transmit alarm, supervisory, and trouble signals to a remote alarm station.

E. Printout of Events: On receipt of signal, print alarm, supervisory, and trouble events. Identify zone, device, and function. Include type of signal (alarm, supervisory, or trouble) and date and time of occurrence. Differentiate alarm signals from all other printed indications. Also print system reset event, including same information for device, location, date, and time. Commands initiate the printing of a list of existing alarm, supervisory, and trouble conditions in the system and a historical log of events.

F. Primary Power: 24-V dc obtained from 120-V ac service and a power-supply module. Initiating devices, notification appliances, signaling lines, trouble signals, and supervisory signals shall be powered by 24-V dc source.
   1. Alarm current draw of entire fire-alarm system shall not exceed 80 percent of the power-supply module rating.

G. Secondary Power: 24-V dc supply system with batteries, automatic battery charger, and automatic transfer switch.
   1. Batteries: Sealed lead calcium.

H. Instructions: Computer printout or typewritten instruction card mounted behind a plastic or glass cover in a stainless-steel or aluminum frame. Include interpretation and describe appropriate

response for displays and signals. Briefly describe the functional operation of the system under normal, alarm, and trouble conditions.

2.4 MANUAL FIRE-ALARM BOXES

A. General Requirements for Manual Fire-Alarm Boxes: Comply with UL 38. Boxes shall be finished in red with molded, raised-letter operating instructions in contrasting color; shall show visible indication of operation; and shall be mounted on recessed outlet box. If indicated as surface mounted, provide manufacturer's surface back box.
   1. Double-action mechanism requiring two actions to initiate an alarm, pull-lever type; with integral addressable module arranged to communicate manual-station status (normal, alarm, or trouble) to fire-alarm control unit.
   2. Station Reset: Key- or wrench-operated switch.
   3. Weatherproof Protective Shield: Factory-fabricated clear plastic enclosure hinged at the top to permit lifting for access to initiate an alarm.

2.5 SYSTEM SMOKE DETECTORS

A. General Requirements for System Smoke Detectors:
   1. Comply with UL 268; operating at 24-V dc, nominal.
   2. Detectors shall be four-wire type.
   3. Integral Addressable Module: Arranged to communicate detector status (normal, alarm, or trouble) to fire-alarm control unit.
   4. Base Mounting: Detector and associated electronic components shall be mounted in a twist-lock module that connects to a fixed base. Provide terminals in the fixed base for connection to building wiring.
   5. Self-Restoring: Detectors do not require resetting or readjustment after actuation to restore them to normal operation.
   6. Integral Visual-Indicating Light: LED type indicating detector has operated and power-on status.
   7. Remote Control: Unless otherwise indicated, detectors shall be analog-addressable type, individually monitored at fire-alarm control unit for calibration, sensitivity, and alarm condition and individually adjustable for sensitivity by fire-alarm control unit.
      a. Rate-of-rise temperature characteristic shall be selectable at fire-alarm control unit for 15 or 20 deg F per minute.
      b. Fixed-temperature sensing shall be independent of rate-of-rise sensing and shall be settable at fire-alarm control unit to operate at 135 or 155 deg F.
      c. Provide multiple levels of detection sensitivity for each sensor.

B. Photoelectric Smoke Detectors:
   1. Detector address shall be accessible from fire-alarm control unit and shall be able to identify the detector's location within the system and its sensitivity setting.

2. An operator at fire-alarm control unit, having the designated access level, shall be able to manually access the following for each detector:
   a. Primary status.
   b. Device type.
   c. Present average value.
   d. Present sensitivity selected.
   e. Sensor range (normal, dirty, etc.).

C. Duct Smoke Detectors: Photoelectric type complying with UL 268A.
1. Detector address shall be accessible from fire-alarm control unit and shall be able to identify the detector's location within the system and its sensitivity setting.
2. An operator at fire-alarm control unit, having the designated access level, shall be able to manually access the following for each detector:
   a. Primary status.
   b. Device type.
   c. Present average value.
   d. Present sensitivity selected.
   e. Sensor range (normal, dirty, etc.).
3. Weatherproof Duct Housing Enclosure: NEMA 250, Type 4X; NRTL listed for use with the supplied detector.
4. Each sensor shall have multiple levels of detection sensitivity.
5. Sampling Tubes: Design and dimensions as recommended by manufacturer for specific duct size, air velocity, and installation conditions where applied.
6. Relay Fan Shutdown: Rated to interrupt fan motor-control circuit.

2.6 HEAT DETECTORS

A. General Requirements for Heat Detectors: Comply with UL 521.

B. Heat Detector, Combination Type: Actuated by either a fixed temperature of 135 deg F or a rate of rise that exceeds 15 deg F per minute unless otherwise indicated.
1. Mounting: Twist-lock base interchangeable with smoke-detector bases.
2. Integral Addressable Module: Arranged to communicate detector status (normal, alarm, or trouble) to fire-alarm control unit.

C. Heat Detector, Fixed-Temperature Type: Actuated by temperature that exceeds a fixed temperature of 190 deg F.
1. Mounting: Twist-lock base interchangeable with smoke-detector bases.
2. Integral Addressable Module: Arranged to communicate detector status (normal, alarm, or trouble) to fire-alarm control unit.

2.7 NOTIFICATION APPLIANCES

A. General Requirements for Notification Appliances: Individually addressed, connected to a signaling line circuit, equipped for mounting as indicated and with screw terminals for system connections.

B. General Requirements for Notification Appliances: Connected to notification appliance signal circuits, zoned as indicated, equipped for mounting as indicated and with screw terminals for system connections.
   1. Combination Devices: Factory-integrated audible and visible devices in a single-mounting assembly, equipped for mounting as indicated and with screw terminals for system connections.

C. Horns: Electric-vibrating-polarized type, 24-V dc; with provision for housing the operating mechanism behind a grille. Comply with UL 464. Horns shall produce a sound-pressure level of 90 dBA, measured 10 feet from the horn, using the coded signal prescribed in UL 464 test protocol.

D. Visible Notification Appliances: Xenon strobe lights comply with UL 1971, with clear or nominal white polycarbonate lens mounted on an aluminum faceplate. The word "FIRE" is engraved in minimum 1-inch-high letters on the lens.
   1. Rated Light Output:
      a. 15/30/75/110 cd, selectable in the field.
   2. Mounting: Wall mounted unless otherwise indicated.
   3. For units with guards to prevent physical damage, light output ratings shall be determined with guards in place.
   4. Flashing shall be in a temporal pattern, synchronized with other units.
   5. Strobe Leads: Factory connected to screw terminals.
   6. Mounting Faceplate: Factory finished, red.

2.8 REMOTE ANNUNCIATOR

A. Description: Annunciator functions shall match those of fire-alarm control unit for alarm, supervisory, and trouble indications. Manual switching functions shall match those of fire-alarm control unit, including acknowledging, silencing, resetting, and testing.
   1. Mounting: Flush cabinet, NEMA 250, Type 1.

B. Display Type and Functional Performance: Alphanumeric display and LED indicating lights shall match those of fire-alarm control unit. Provide controls to acknowledge, silence, reset, and test functions for alarm, supervisory, and trouble signals.

2.9 DIGITAL ALARM COMMUNICATOR TRANSMITTER

A. Digital alarm communicator transmitter shall be acceptable to the remote central station and shall comply with UL 632 and be listed and labeled by an NRTL.

B. Functional Performance: Unit shall receive an alarm, supervisory, or trouble signal from fire-alarm control unit and automatically capture two telephone line(s) and dial a preset number for a remote central station. When contact is made with central station(s), signals shall be transmitted. If service on either line is interrupted for longer than 45 seconds, transmitter shall initiate a local trouble signal and transmit the signal indicating loss of telephone line to the remote alarm receiving station over the remaining line. Transmitter shall automatically report telephone service restoration to the central station. If service is lost on both telephone lines, transmitter shall initiate the local trouble signal.

C. Local functions and display at the digital alarm communicator transmitter shall include the following:
   1. Verification that both telephone lines are available.
   2. Programming device.
   3. LED display.
   4. Manual test report function and manual transmission clear indication.
   5. Communications failure with the central station or fire-alarm control unit.

D. Digital data transmission shall include the following:
   1. Address of the alarm-initiating device.
   2. Address of the supervisory signal.
   3. Address of the trouble-initiating device.
   4. Loss of ac supply or loss of power.
   5. Low battery.
   6. Abnormal test signal.
   7. Communication bus failure.

E. Secondary Power: Integral rechargeable battery and automatic charger.

F. Self-Test: Conducted automatically every 24 hours with report transmitted to central station.

PART 3 - EXECUTION

3.1 EQUIPMENT INSTALLATION

A. Comply with NFPA 72 for installation of fire-alarm equipment.

B. Equipment Mounting: Install fire-alarm control unit on finished floor with tops of cabinets not more than 72 inches above the finished floor.

C. Smoke- or Heat-Detector Spacing:
   1. Comply with NFPA 72, "Smoke-Sensing Fire Detectors" Section in the "Initiating Devices" Chapter, for smoke-detector spacing.
   2. Comply with NFPA 72, "Heat-Sensing Fire Detectors" Section in the "Initiating Devices" Chapter, for heat-detector spacing.
   3. Smooth ceiling spacing shall not exceed 30 feet.

4. Spacing of detectors for irregular areas, for irregular ceiling construction, and for high ceiling areas shall be determined according to Appendix A or Appendix B in NFPA 72.
5. HVAC: Locate detectors not closer than 3 feet from air-supply diffuser or return-air opening.
6. Lighting Fixtures: Locate detectors not closer than 12 inches from any part of a lighting fixture.

D. Duct Smoke Detectors: Comply with NFPA 72 and NFPA 90A. Install sampling tubes so they extend the full width of duct.

E. Remote Status and Alarm Indicators: Install near each smoke detector and each sprinkler water-flow switch and valve-tamper switch that is not readily visible from normal viewing position.

F. Audible Alarm-Indicating Devices: Install not less than 6 inches below the ceiling. Install bells and horns on flush-mounted back boxes with the device-operating mechanism concealed behind a grille.

G. Visible Alarm-Indicating Devices: Install adjacent to each alarm bell or alarm horn and at least 6 inches below the ceiling.

H. Device Location-Indicating Lights: Locate in public space near the device they monitor.

I. Fire-Alarm Control Unit: Surface mounted, with tops of cabinets not more than 72 inches above the finished floor.

J. Annunciator: Install with top of panel not more than 72 inches above the finished floor.

3.2 IDENTIFICATION

A. Identify system components, wiring, cabling, and terminals. Comply with requirements for identification specified in Division 26 Section "Identification for Electrical Systems."

B. Install framed instructions in a location visible from fire-alarm control unit.

3.3 GROUNDING

A. Ground fire-alarm control unit and associated circuits; comply with IEEE 1100. Install a ground wire from main service ground to fire-alarm control unit.

3.4 FIELD QUALITY CONTROL

A. Field tests shall be witnessed by engineer and authorities having jurisdiction.

B. Manufacturer's Field Service: Engage a factory-authorized service representative to inspect, test, and adjust components, assemblies, and equipment installations, including connections.

C. Perform tests and inspections.
   1. Manufacturer's Field Service: Engage a factory-authorized service representative to inspect components, assemblies, and equipment installations, including connections, and to assist in testing.

D. Tests and Inspections:
   1. Visual Inspection: Conduct visual inspection prior to testing.
      a. Inspection shall be based on completed Record Drawings and system documentation that is required by NFPA 72 in its "Completion Documents, Preparation" Table in the "Documentation" Section of the "Fundamentals of Fire Alarm Systems" Chapter.
      b. Comply with "Visual Inspection Frequencies" Table in the "Inspection" Section of the "Inspection, Testing and Maintenance" Chapter in NFPA 72; retain the "Initial/Reacceptance" column and list only the installed components.
   2. System Testing: Comply with "Test Methods" Table in the "Testing" Section of the "Inspection, Testing and Maintenance" Chapter in NFPA 72.

E. Reacceptance Testing: Perform reacceptance testing to verify the proper operation of added or replaced devices and appliances.

F. Fire-alarm system will be considered defective if it does not pass tests and inspections.

G. Prepare test and inspection reports.

3.5 DEMONSTRATION

A. Engage a factory-authorized service representative to demonstrate all components, assemblies, and equipment installations and to adequately describe the system operation to the Owner’s satisfaction.

END OF SECTION 283111

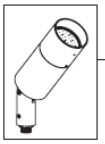

DENALI™ FLOODLIGHT

PROJECT:	

TYPE:	
CATALOG NUMBER:	
SOURCE:	
NOTES:	

CATALOG NUMBER LOGIC

DE	LED						
DE	- LED	- x22	- FL	- SAP	- 12	- 11	- C

Example: DE - LED - x22 - FL - SAP - 12 - 11 - C

Series
- DE - Denali™ Floodlight

Source
- LED - 'X' Module with Cold Phosphor Technology

LED Type
- x21 - 15WLED/2700K
- x22 - 15WLED/3000K
- x23 - 15WLED/4000K
- x24 - 25WLED/2700K
- x25 - 25WLED/3000K
- x26 - 25WLED/4000K

Optics
- SP - Spot (20°)
- FL - Flood (40°)
- WFL - Wide Flood (60°)

Finish

Standard Finish

Powder Coat Color	Satin	Wrinkle
Bronze	BZP	BZW
Black	BLP	BLW
White (Gloss)	WHP	WHW
Aluminum	SAP	—
Verde	—	VER

Premium Finish

ABP	Antique Brass Powder	CMG	Cascade Mountain Granite	RMG	Rocky Mountain Granite
AMG	Aleutian Mountain Granite	CRI	Cracked Ice	SDS	Sonoran Desert Sandstone
AQW	Antique White	CRM	Cream	SMG	Sierra Mountain Granite
BCM	Black Chrome	HUG	Hunter Green	TXF	Textured Forest
BGE	Beige	MDS	Mojave Desert Sandstone	WCP	Weathered Copper
BPP	Brown Patina Powder	NBP	Natural Brass Powder	WIR	Weathered Iron
CAP	Clear Anodized Powder	OCP	Old Copper	*Also available in RAL Finishes See submittal SUB-1439-00*	

Lens Type
- 9 - Clear (Standard)
- 10 - Spread Lens*
- 12 - Soft Focus Lens*
- 13 - Rectilinear Lens*

Shielding
- 11 - Honeycomb Baffle*

**Accommodates up to 2 Lens/Shielding media*

Cap Style
- A - 45°
- B - 90°
- C - Flush
- D - 45° without Weep Hole *(Interior Use Only)*
- E - 90° without Weep Hole *(Interior Use Only)*

Configure Separately

Driver Housing Required
- HP2 - HP2 Housing
- HP2RM - HP2 Remote Housing
- PM2 - Universal Power Module 2
- PM2D - Universal Power Module 2 Dual
- PM2RM - Universal Power Module 2 Remote
- PM2DRM - Universal Power Module 2 Dual Remote
- PC - Power Canopy
- PPII - Power Pipe II
- TMB - Pole Mount or Tenon Mount
- RM - Remote Wall Mount
- DRM - Dual Remote Wall Mount

LM79 DATA

BK No.	CCT (Typ.)	CRI (Ra. Typ.)	Color Consistency	Input Watts (Typ.)
x21	2700K	>80	±40K	15
x22	3000K	>80	±50K	15
x23	4000K	>80	±70K	15
x24	2700K	>80	±40K	25
x25	3000K	>80	±50K	25
x26	4000K	>80	±70K	25

L70 DATA

Minimum Rated Life (hrs.) 70% of initial lumens (L_{70})
50,000
50,000
50,000
50,000
50,000
50,000

OPTICAL DATA

Beam Type	Angle
Spot	20°
Flood	40°
Wide Flood	60°

B-K LIGHTING

40429 Brickyard Drive • Madera, CA 93636 • USA
559.438.5800 • FAX 559.438.5900
www.bklighting.com • info@bklighting.com

SUBMITTAL DATE	DRAWING NUMBER
12-14-11	SUB001113

THIS DOCUMENT CONTAINS PROPRIETARY INFORMATION OF B-K LIGHTING, INC. AND ITS RECEIPT OR POSSESSION DOES NOT CONVEY ANY RIGHTS TO REPRODUCE, DISCLOSE ITS CONTENTS, OR TO MANUFACTURE, USE OR SELL ANYTHING IT MAY DESCRIBE. REPRODUCTION, DISCLOSURE OR USE WITHOUT SPECIFIC WRITTEN AUTHORIZATION OF B-K LIGHTING, INC. IS STRICTLY FORBIDDEN.

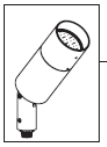

DENALI™ FLOODLIGHT

PROJECT:	
TYPE:	

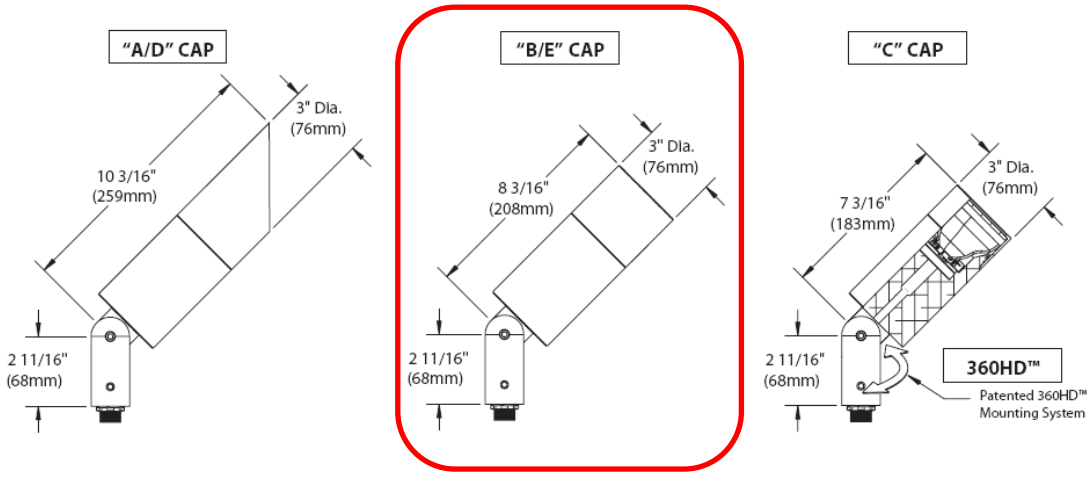

All dimensions indicated on this submittal are nominal.
Contact Technical Sales if you require more stringent specifications.

Accessories *(Configure separately)*

Drivers *(Configure separately)*

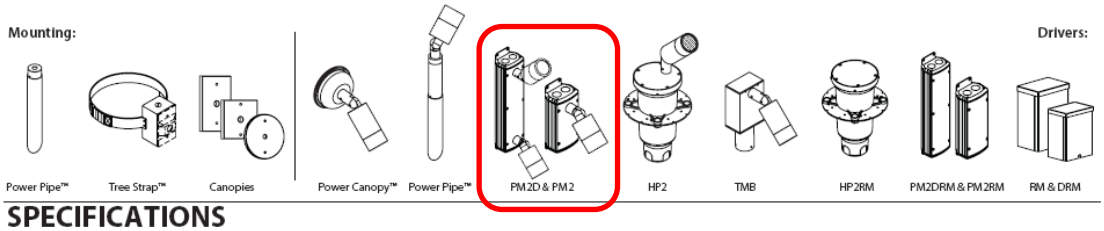

SPECIFICATIONS

GreenSource Initiative™
Metal and packaging components are made from recycled materials. Manufactured using renewable solar energy, produced onsite. Returnable to manufacturer at end of life to ensure cradle-to-cradle handling. Packaging contains no chlorofluorocarbons (CFC's). Use of this product may qualify for GreenSource efficacy and recycling rebate(s). Consult www.bklighting.com/greensource for program requirements.

Materials
Furnished in Copper-Free Aluminum (Type 6061-T6).

Body
Fully machined from solid billet. Unibody design provides enclosed, water-proof wireway and integral heat sink for maximum component life. Integral knuckle for maximum mechanical strength. High temperature, silicone 'O' Ring provides water-tight seal.

Knuckle
Patented 360HD™ Mounting System features a mechanical taper-lock, which allows a full 180° vertical adjustment without the use of serrated teeth, which inherently limit aiming. High temperature, silicone 'O' Ring provides water-tight seal and compressive resistance to maintain fixture position. Design withstands 73 lb. static load prior to movement to ensure decades of optical alignment. ½" pipe thread for mounting. Biaxial source control additionally provides 360° horizontal rotation in addition to vertical adjustment. 'Aim-And-Lock' Technology allows precision adjustment without the redundant tightening and loosening of knuckle screw.

Cap
Fully machined. Accommodates [2] lens or louver media. Choose from 45° cutoff ('A' or 'D'), 1° deep bezel with 90° cutoff ('B' or 'E') or flush lens ('C') cap styles. 'A' and 'B' caps include weep-hole for water and debris drainage. 'D' and 'E' caps exclude weep-hole and are for interior use only.

Lens
Shock resistant, tempered, glass lens is factory adhered to fixture cap and provides hermetically sealed optical compartment.

BKSSL™
Integrated solid state system with 'x' technology is scalable for field upgrade. Modular design with electrical quick disconnects permit field maintenance.

LM-80 certified. Minimum 50,000 hour rated life at 70% of initial lumens (L70). BKSSL technology provides long life, significant energy reduction and exceptional thermal management.

Color Management
Corrected cold phosphor technology delivers near-perfect natural white light. Long term phosphor maintenance over product life. Exact color point conformity exceeds ANSI C78.377 standard. Provides uniform beam with no color variation over angle. Module exceeds 80 CRI (RA>80, R9>16).

Remote Driver
For use with remote LED driver. See remote driver submittal to determine remote distance and wiring requirements prior to detailing field installation of any remote wiring.

Optics
Interchangeable OPTIKIT™ modules permit field changes to optical distribution.

Wiring
Teflon® coated, 18AWG, 600V, 250° C rated and certified to UL 1659 standard.

Hardware
Tamper-resistant, stainless steel hardware. 360HD™ hardware is additionally black oxide treated for additional corrosion resistance.

Finish
StarGuard® (Pat. Pend.), a RoHs compliant, 15 stage chromate-free process cleans and conversion coats aluminum components prior to application of Class 'A' TGIC polyester powder coating. RoHs compliant.

Warranty
5 year limited warranty.

Certification and Listing
ITL tested to IESNA LM-79. Lighting Facts Registration per USDOE (www.lightingfacts.com). ETL Listed to ANSI/UL Standards 1598, 8750 and Certified to CAN/CSA Standard C22.2 No. 250. RoHs compliant. Suitable for indoor or outdoor use. Suitable for use in wet locations. Additionally suitable for installation within 4' of the ground. IP66 Rated. Made in USA.

**Teflon is a registered trademark of DuPont Corporation.*
**Energy Star is a registered trademark of the United States Environmental Protection Agency.*

B-K LIGHTING	40429 Brickyard Drive • Madera, CA 93636 • USA 559.438.5800 • FAX 559.438.5900 www.bklighting.com • info@bklighting.com	SUBMITTAL DATE 12-14-11	DRAWING NUMBER SUB001113

360HD Patent is covered in whole or in part by U.S. Patent No. 6,161,948

project: Peoria Childrens Museum project #: 13.500.10 prepared for: Jack Rouse Associates prepared by: abernathy lighting design Issue Date: 1-6-2014 Rev. Date:	type GA page 2 of 4

UNIVERSAL POWER MODULE
UPM
Low Voltage

PM1 SURFACE MOUNT

PROJECT:	
TYPE:	
CATALOG NUMBER:	
SOURCE(S):	
NOTES:	

CATALOG NUMBER LOGIC

PM1	SM			

Example PM1 - SM - L75E - 1 - 120

Series
- **PM1** - Universal Power Module™ 1 (specify fixture separately)

Mounting
- **SM** - Surface Mount

Transformer Type
- **L75E** - 75VA Electronic Transformer
- **TRe20** - TRe20 Electronic Transformer* *(105-300 VAC. 50/60 Hz. Non-Dimming)*
  *for use with BKSSL fixtures

Fixture Position
- **1** - Offset
- **2** - Center

Input Voltage
- **Blank** - For use with TRe20 Electronic Transformer *(105-300 VAC. 50/60 Hz. Non-Dimming)*
- **120** - 120 VAC Input *(For use with L75E)*
- **230** - 230 VAC Input *(Non-Dimming, For use with L75E)*
- **277** - 277 VAC Input *(Non-Dimming, For use with L75E)*

Catalogue #: DE-LED-x25-WFL-BLP-9-E + PM1-SM-TRe20-1

Lamp: LED by Manufacturer

TRANSFORMER ELECTRICAL DATA

TYPE	TYPE	INPUT VOLTS	DIMMING	MAXIMUM LOAD	MINIMUM LOAD	POWER FACTOR	THD	FREQUENCY	OPER. AMBIENT TEMPERATURE
L75E	Electronic	120	YES	75VA	10VA	>0.93	<20%	>10KhZ	-15° C ~ 90°C
L75E	Electronic	230	NO	75VA	10VA	>0.93	<20%	>10KhZ	-15° C ~ 90°C
L75E	Electronic	277	NO	75VA	10VA	>0.93	<20%	>10KhZ	-15° C ~ 90°C
TRe20	Electronic	105-300	NO	20VA	1VA				

B-K LIGHTING
40429 Brickyard Drive • Madera, CA 93636 • USA
559.438.5800 • FAX 559.438.5900
www.bklighting.com • info@bklighting.com

SUBMITTAL DATE 8-23-13

DRAWING NUMBER SUB-1499-00

THIS DOCUMENT CONTAINS PROPRIETARY INFORMATION OF B-K LIGHTING, INC. AND ITS RECEIPT OR POSSESSION DOES NOT CONVEY ANY RIGHTS TO REPRODUCE, DISCLOSE ITS CONTENTS, OR TO MANUFACTURE, USE OR SELL ANYTHING IT MAY DESCRIBE. REPRODUCTION, DISCLOSURE OR USE WITHOUT SPECIFIC WRITTEN AUTHORIZATION OF B-K LIGHTING, INC. IS STRICTLY FORBIDDEN.

project: Peoria Childrens Museum
project #: 13.500.10
prepared for: Jack Rouse Associates
prepared by: abernathy lighting design

Issue Date: 1-6-2014
Rev. Date:

type
GA

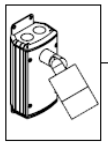

UNIVERSAL POWER MODULE
UPM
Low Voltage

PM1 SURFACE MOUNT

PROJECT:	
TYPE:	

FRONT VIEW

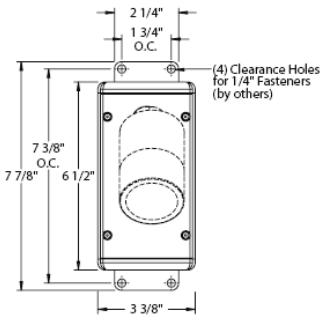

SIDE VIEW

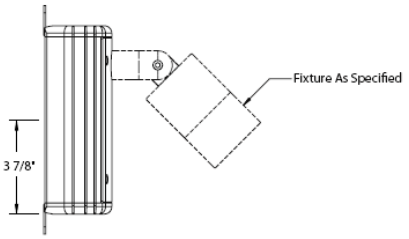

END VIEW

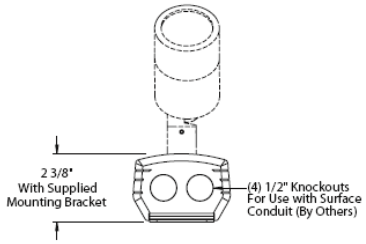

All dimensions indicated on this submittal are nominal.
Contact Technical Sales if you require more stringent specifications.

SPECIFICATIONS

GreenSource Initiative™
Metal and packaging components are made from recycled materials. Manufactured using renewable solar energy, produced onsite. Returnable to manufacturer at end of life to ensure cradle-to-cradle handling. Packaging contains no chlorofluorocarbons (CFC's). Use of this product may qualify for GreenSource efficacy and recycling rebate(s). Consult www.bklighting.com/greensource for program requirements.

Installation
Universal design accommodates a single low voltage fixture (specified separately) and permits water-tight installation in four distinct mounting conditions.

Surface Mount
For use with side entry, surface conduits. Stainless steel mounting brackets provide for direct anchor to architectural surfaces in any orientation.

Housing
Copper free, aluminum extrusion with die cast end caps. Surface mounted with flow through back channel to prevent water and debris collection. Machined aluminum cover with countersunk holes for flush hardware installation. Specify offset or center fixture position. Tamper-resistant, captive, black oxide stainless steel mounting screws. Front access for ease of installation and inspection. [2] 1/2" NPT female conduit entries per end cap for through wiring.

Installation Tether
Stainless steel cable with integral loop allows cover to temporarily suspend from housing during installation to simplify wire connection and component attachment.

Patented Knockouts
[4] 1/2" NPT, machined aluminum knockouts. High temperature, silicone 'O' Ring for water-tight seal. Patented design allows knockout to be reinserted without compromising seal integrity.

L75E Transformer
For use with halogen lamps. [1] 75VA electronic low voltage transformer. 120, 230, or 277VAC primary voltage. 120V is dimmable (40W minimum load) using electronic low voltage dimmer. 10 watt minimum load (non-dimmed). 50/60Hz. 11.6VAC secondary voltage. >.93 Power Factor. <20% THD. Operating frequency >10kHz. Primary overload protection and RFI filtration. Soft start circuitry extends lamp life.

TRe20 Electronic Transformer
For use with BKSSL solid state Power of 'e' Systems. [1] 20VA electronic low voltage transformer. 105-330VAC primary voltage. 1 watt minimum load. 20 watt maximum load. 50/60Hz. Non-Dimming. 12VDC secondary voltage. >90% Power Factor. >80% Efficiency (under full load). Inrush current limited to <5A max. Thermal shutdown with auto-restart. Overload, short circuit, and open circuit protection.

Finish
StarGuard®, our exclusive RoHs compliant, 15 stage chromate-free process cleans and conversion coats aluminum components prior to application of Class 'A' TGIC polyester powder coating. Finish to match fixtures. (specified separately).

Warranty
5 year limited warranty.

Listings
NEMA 4X / IP-66 Rated Enclosure. ETL Listed to ANSI/UL Standard 50/50E and Certified to CAN/CSA Standard C22.2 No. 94.1/94.2. RoHs compliant. Made in USA.

ETL Intertek | USA | RoHS

B-K LIGHTING	40429 Brickyard Drive • Madera, CA 93636 • USA 559.438.5800 • FAX 559.438.5900 www.bklighting.com • info@bklighting.com	SUBMITTAL DATE 8-23-13	DRAWING NUMBER SUB-1499-00

UPM's Patented knockouts are covered by U.S. Patent No. 6,940,012 B2

project: Peoria Childrens Museum project #: 13.500.10 prepared for: Jack Rouse Associates prepared by: abernathy lighting design Issue Date: 1-6-2014 Rev. Date:	type **GA**

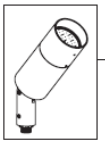

DENALI™ FLOODLIGHT

PROJECT:	
TYPE:	
CATALOG NUMBER:	
SOURCE:	
NOTES:	

CATALOG NUMBER LOGIC

	DE	LED						
Example:	DE -	LED -	x22 -	FL -	SAP -	12 -	11 -	C

Series
- DE - Denali™ Floodlight

Source
- LED - 'X' Module with Cold Phosphor Technology

LED Type
- x21 - 15WLED/2700K
- x22 - 15WLED/3000K
- x23 - 15WLED/4000K
- x24 - 25WLED/2700K
- x25 - 25WLED/3000K
- x26 - 25WLED/4000K

Optics
- SP - Spot (20°)
- FL - Flood (40°)
- WFL - Wide Flood (60°)

Finish

Standard Finish

Powder Coat Color	Satin	Wrinkle
Bronze	BZP	BZW
Black	BLP	BLW
White (Gloss)	WHP	WHW
Aluminum	SAP	—
Verde	—	VER

Premium Finish

ABP	Antique Brass Powder	CMG	Cascade Mountain Granite	RMG	Rocky Mountain Granite
AMG	Aleutian Mountain Granite	CRI	Cracked Ice	SDS	Sonoran Desert Sandstone
AQW	Antique White	CRM	Cream	SMG	Sierra Mountain Granite
BCM	Black Chrome	HUG	Hunter Green	TXF	Textured Forest
BGE	Beige	MDS	Mojave Desert Sandstone	WCP	Weathered Copper
BPP	Brown Patina Powder	NBP	Natural Brass Powder	WIR	Weathered Iron
CAP	Clear Anodized Powder	OCP	Old Copper		

Also available in RAL Finishes See submittal SUB-1439-00

Lens Type
- 9 - Clear (Standard)
- 10 - Spread Lens*
- 12 - Soft Focus Lens*
- 13 - Rectilinear Lens*

Shielding
- 11 - Honeycomb Baffle*

**Accommodates up to 2 Lens/Shielding media*

Cap Style
- A - 45°
- B - 90°
- C - Flush
- D - 45° without Weep Hole *(Interior Use Only)*
- E - 90° without Weep Hole *(Interior Use Only)*

Configure Separately

Driver Housing Required
- HP2 - HP2 Housing
- HP2RM - HP2 Remote Housing
- PM2 - Universal Power Module 2
- PM2D - Universal Power Module 2 Dual
- PM2RM - Universal Power Module 2 Remote
- PM2DRM - Universal Power Module 2 Dual Remote
- PC - Power Canopy
- PPII - Power Pipe II
- TMB - Pole Mount or Tenon Mount
- RM - Remote Wall Mount
- DRM - Dual Remote Wall Mount

LM79 DATA

BK No.	CCT (Typ.)	CRI (Ra. Typ.)	Color Consistency	Input Watts (Typ.)
x21	2700K	>80	±40K	15
x22	3000K	>80	±50K	15
x23	4000K	>80	±70K	15
x24	2700K	>80	±40K	25
x25	3000K	>80	±50K	25
x26	4000K	>80	±70K	25

L70 DATA

Minimum Rated Life (hrs.) 70% of initial lumens (L_{70})
50,000
50,000
50,000
50,000
50,000
50,000

OPTICAL DATA

Beam Type	Angle
Spot	20°
Flood	40°
Wide Flood	60°

B-K LIGHTING

40429 Brickyard Drive • Madera, CA 93636 • USA
559.438.5800 • FAX 559.438.5900
www.bklighting.com • info@bklighting.com

SUBMITTAL DATE	DRAWING NUMBER
12-14-11	SUB001113

THIS DOCUMENT CONTAINS PROPRIETARY INFORMATION OF B-K LIGHTING, INC. AND ITS RECEIPT OR POSSESSION DOES NOT CONVEY ANY RIGHTS TO REPRODUCE, DISCLOSE ITS CONTENTS, OR TO MANUFACTURE, USE OR SELL ANYTHING IT MAY DESCRIBE. REPRODUCTION, DISCLOSURE OR USE WITHOUT SPECIFIC WRITTEN AUTHORIZATION OF B-K LIGHTING, INC. IS STRICTLY FORBIDDEN.

project: Peoria Childrens Museum
project #: 13.500.10
prepared for: Jack Rouse Associates
prepared by: abernathy lighting design

Issue Date: 1-6-2014
Rev. Date:

type
GA-1

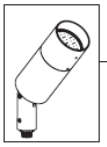

DENALI™ FLOODLIGHT

PROJECT:	
TYPE:	

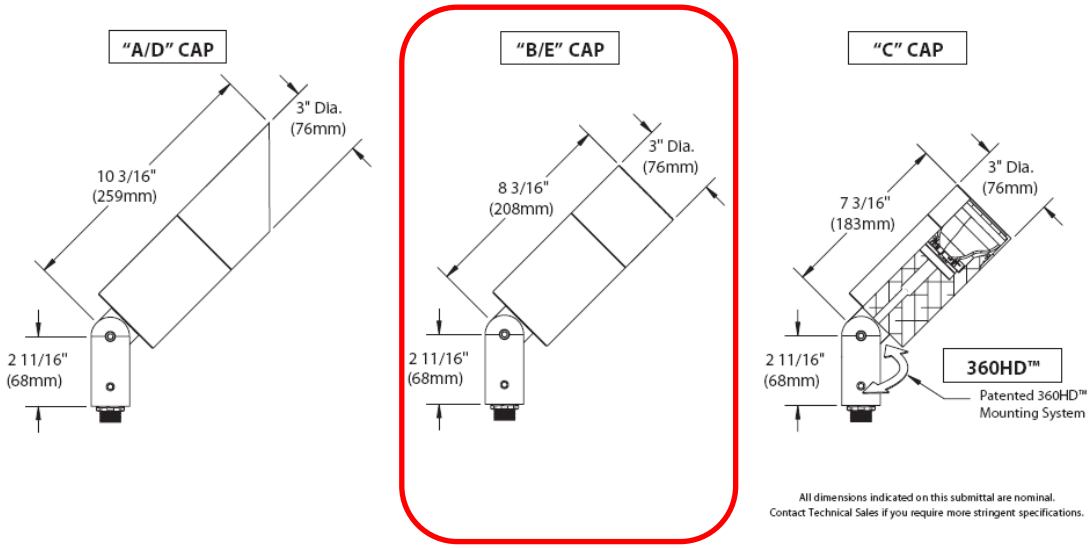

All dimensions indicated on this submittal are nominal.
Contact Technical Sales if you require more stringent specifications.

Accessories *(Configure separately)*

Drivers *(Configure separately)*

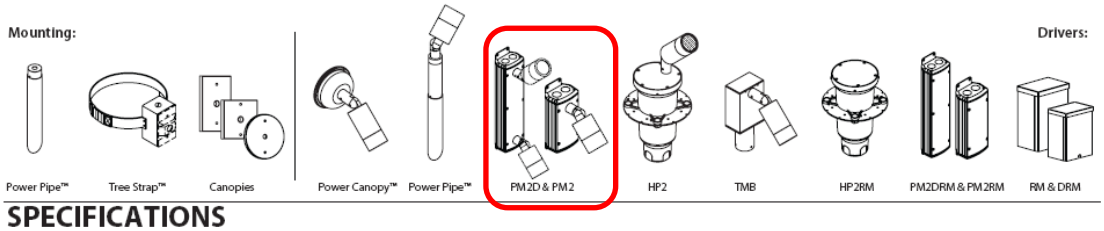

SPECIFICATIONS

GreenSource Initiative™
Metal and packaging components are made from recycled materials. Manufactured using renewable solar energy, produced onsite. Returnable to manufacturer at end of life to ensure cradle-to-cradle handling. Packaging contains no chlorofluorocarbons (CFC's). Use of this product may qualify for GreenSource efficacy and recycling rebate(s). Consult www.bklighting.com/greensource for program requirements.

Materials
Furnished in Copper-Free Aluminum (Type 6061-T6).

Body
Fully machined from solid billet. Unibody design provides enclosed, water-proof wireway and integral heat sink for maximum component life. Integral knuckle for maximum mechanical strength. High temperature, silicone 'O' Ring provides water-tight seal.

Knuckle
Patented 360HD™ Mounting System features a mechanical taper-lock, which allows a full 180° vertical adjustment without the use of serrated teeth, which inherently limit aiming. High temperature, silicone 'O' Ring provides water-tight seal and compressive resistance to maintain fixture position. Design withstands 73 lb. static load prior to movement to ensure decades of optical alignment. ½" pipe thread for mounting. Biaxial source control additionally provides 360° horizontal rotation in addition to vertical adjustment. 'Aim-And-Lock' Technology allows precision adjustment without the redundant tightening and loosening of knuckle screw.

Cap
Fully machined. Accommodates [2] lens or louver media. Choose from 45° cutoff ('A' or 'D'), 1" deep bezel with 90° cutoff ('B' or 'E') or flush lens ('C') cap styles. 'A' and 'B' caps include weep-hole for water and debris drainage. 'D' and 'E' caps exclude weep-hole and are for interior use only.

Lens
Shock resistant, tempered, glass lens is factory adhered to fixture cap and provides hermetically sealed optical compartment.

BKSSL™
Integrated solid state system with 'x' technology is scalable for field upgrade. Modular design with electrical quick disconnects permit field maintenance.

LM-80 certified. Minimum 50,000 hour rated life at 70% of initial lumens (L70). BKSSL technology provides long life, significant energy reduction and exceptional thermal management.

Color Management
Corrected cold phosphor technology delivers near-perfect natural white light. Long term phosphor maintenance over product life. Exact color point conformity exceeds ANSI C78.377 standard. Provides uniform beam with no color variation over angle. Module exceeds 80 CRI (RA>80, R9>16).

Remote Driver
For use with remote LED driver. See remote driver submittal to determine remote distance and wiring requirements prior to detailing field installation of any remote wiring.

Optics
Interchangeable OPTIKIT™ modules permit field changes to optical distribution.

Wiring
Teflon® coated, 18AWG, 600V, 250° C rated and certified to UL 1659 standard.

Hardware
Tamper-resistant, stainless steel hardware. 360HD™ hardware is additionally black oxide treated for additional corrosion resistance.

Finish
StarGuard® (Pat. Pend.), a RoHs compliant, 15 stage chromate-free process cleans and conversion coats aluminum components prior to application of Class 'A' TGIC polyester powder coating. RoHs compliant.

Warranty
5 year limited warranty.

Certification and Listing
ITL tested to IESNA LM-79. Lighting Facts Registration per USDOE (www.lightingfacts.com). ETL Listed to ANSI/UL Standards 1598, 8750 and Certified to CAN/CSA Standard C22.2 No. 250. RoHs compliant. Suitable for indoor or outdoor use. Suitable for use in wet locations. Additionally suitable for installation within 4' of the ground. IP66 Rated. Made in USA.

**Teflon is a registered trademark of DuPont Corporation.*
**Energy Star is a registered trademark of the United States Environmental Protection Agency.*

B-K LIGHTING	40429 Brickyard Drive • Madera, CA 93636 • USA 559.438.5800 • FAX 559.438.5900 www.bklighting.com • info@bklighting.com	SUBMITTAL DATE 12-14-11	DRAWING NUMBER SUB001113

360HD Patent is covered in whole or in part by U.S. Patent No. 6,161,948

project: Peoria Childrens Museum project #: 13.500.10 prepared for: Jack Rouse Associates prepared by: abernathy lighting design Issue Date: 1-6-2014 Rev. Date:	type **GA-1**

UNIVERSAL POWER MODULE
UPM
Low Voltage

PM1 SURFACE MOUNT

PROJECT:	
TYPE:	
CATALOG NUMBER:	
SOURCE(S):	
NOTES:	

CATALOG NUMBER LOGIC

PM1	SM			

Example PM1 - SM - L75E - 1 - 120

Series
- **PM1** - Universal Power Module™ 1 (specify fixture separately)

Mounting
- **SM** - Surface Mount

Transformer Type
- **L75E** - 75VA Electronic Transformer
- **TRe20** - TRe20 Electronic Transformer* *(105-300 VAC. 50/60 Hz. Non-Dimming)*
  *for use with BKSSL fixtures

Fixture Position
- **1** - Offset
- **2** - Center

Input Voltage
- **Blank** - For use with TRe20 Electronic Transformer *(105-300 VAC. 50/60 Hz. Non-Dimming)*
- **120** - 120 VAC Input *(For use with L75E)*
- **230** - 230 VAC Input *(Non-Dimming, For use with L75E)*
- **277** - 277 VAC Input *(Non-Dimming, For use with L75E)*

Catalogue #: DE-LED-x25-FL-VER-9-11-E + PM1-SM-TRe20-1

Lamp: LED by Manufacturer

TRANSFORMER ELECTRICAL DATA

TYPE	TYPE	INPUT VOLTS	DIMMING	MAXIMUM LOAD	MINIMUM LOAD	POWER FACTOR	THD	FREQUENCY	OPER. AMBIENT TEMPERATURE
L75E	Electronic	120	YES	75VA	10VA	>0.93	<20%	>10KhZ	-15° C ~ 90°C
L75E	Electronic	230	NO	75VA	10VA	>0.93	<20%	>10KhZ	-15° C ~ 90°C
L75E	Electronic	277	NO	75VA	10VA	>0.93	<20%	>10KhZ	-15° C ~ 90°C
TRe20	Electronic	105-300	NO	20VA	1VA				

B-K LIGHTING
40429 Brickyard Drive • Madera, CA 93636 • USA
559.438.5800 • FAX 559.438.5900
www.bklighting.com • info@bklighting.com

SUBMITTAL DATE 8-23-13
DRAWING NUMBER SUB-1499-00

THIS DOCUMENT CONTAINS PROPRIETARY INFORMATION OF B-K LIGHTING, INC. AND ITS RECEIPT OR POSSESSION DOES NOT CONVEY ANY RIGHTS TO REPRODUCE, DISCLOSE ITS CONTENTS, OR TO MANUFACTURE, USE OR SELL ANYTHING IT MAY DESCRIBE. REPRODUCTION, DISCLOSURE OR USE WITHOUT SPECIFIC WRITTEN AUTHORIZATION OF B-K LIGHTING, INC. IS STRICTLY FORBIDDEN.

project: Peoria Childrens Museum
project #: 13.500.10
prepared for: Jack Rouse Associates
prepared by: abernathy lighting design

Issue Date: 1-6-2014
Rev. Date:

type
GA-1

UNIVERSAL POWER MODULE
UPM
Low Voltage

PM1 SURFACE MOUNT

PROJECT:	
TYPE:	

FRONT VIEW

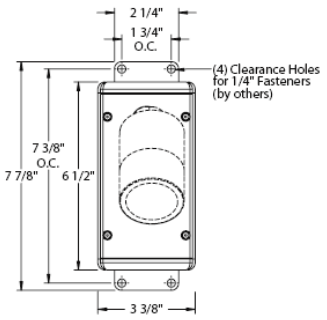

SIDE VIEW

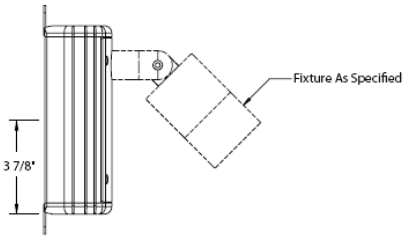

END VIEW

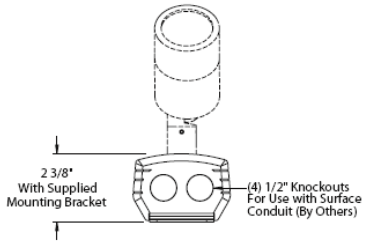

All dimensions indicated on this submittal are nominal.
Contact Technical Sales if you require more stringent specifications.

SPECIFICATIONS

GreenSource Initiative™
Metal and packaging components are made from recycled materials. Manufactured using renewable solar energy, produced onsite. Returnable to manufacturer at end of life to ensure cradle-to-cradle handling. Packaging contains no chlorofluorocarbons (CFC's). Use of this product may qualify for GreenSource efficacy and recycling rebate(s). Consult www.bklighting.com/greensource for program requirements.

Installation
Universal design accommodates a single low voltage fixture (specified separately) and permits water-tight installation in four distinct mounting conditions.

Surface Mount
For use with side entry, surface conduits. Stainless steel mounting brackets provide for direct anchor to architectural surfaces in any orientation.

Housing
Copper free, aluminum extrusion with die cast end caps. Surface mounted with flow through back channel to prevent water and debris collection. Machined aluminum cover with countersunk holes for flush hardware installation. Specify offset or center fixture position. Tamper-resistant, captive, black oxide stainless steel mounting screws. Front access for ease of installation and inspection. [2] 1/2" NPT female conduit entries per end cap for through wiring.

Installation Tether
Stainless steel cable with integral loop allows cover to temporarily suspend from housing during installation to simplify wire connection and component attachment.

Patented Knockouts
[4] 1/2" NPT, machined aluminum knockouts. High temperature, silicone 'O' Ring for water-tight seal. Patented design allows knockout to be reinserted without compromising seal integrity.

L75E Transformer
For use with halogen lamps. [1] 75VA electronic low voltage transformer. 120, 230, or 277VAC primary voltage. 120V is dimmable (40W minimum load) using electronic low voltage dimmer. 10 watt minimum load (non-dimmed). 50/60Hz. 11.6VAC secondary voltage. >.93 Power Factor. <20% THD. Operating frequency >10kHz. Primary overload protection and RFI filtration. Soft start circuitry extends lamp life.

TRe20 Electronic Transformer
For use with ELESSL solid state Power of 'e' Systems. [1] 20VA electronic low voltage transformer. 105-330VAC primary voltage. 1 watt minimum load. 20 watt maximum load. 50/60Hz. Non-Dimming. 12VDC secondary voltage. >90% Power Factor. >80% Efficiency (under full load). Inrush current limited to <5A max. Thermal shutdown with auto-restart. Overload, short circuit, and open circuit protection.

Finish
StarGuard®, our exclusive RoHs compliant, 15 stage chromate-free process cleans and conversion coats aluminum components prior to application of Class 'A' TGIC polyester powder coating. Finish to match fixtures. (specified separately).

Warranty
5 year limited warranty.

Listings
NEMA 4X / IP-66 Rated Enclosure. ETL Listed to ANSI/UL Standard 50/50E and Certified to CAN/CSA Standard C22.2 No. 94.1/94.2. RoHs compliant. Made in USA.

ETL Intertek · MADE IN THE USA · RoHS

B-K LIGHTING	40429 Brickyard Drive • Madera, CA 93636 • USA 559.438.5800 • FAX 559.438.5900 www.bklighting.com • info@bklighting.com	SUBMITTAL DATE 8-23-13	DRAWING NUMBER SUB-1499-00

UPM's Patented knockouts are covered by U.S. Patent No. 6,940,012 B2

project: Peoria Childrens Museum project #: 13.500.10 prepared for: Jack Rouse Associates prepared by: abernathy lighting design Issue Date: 1-6-2014 Rev. Date:	type **GA-1**

T 604.549.9379
F 604.549.9555
W fluxwerx.com

FLUXWERX

Luminaire	PROFILE VSI 100 DN LED (ASYMMETRIC)	Type
Project		
Product		
Notes		

c UL us LISTED

5 YEAR WARRANTY

Performance Summary	Asymmetric		Symmetric	
	A	B	C	D
Light (lm)	1800	2200	2900	3500
Energy (W)	24	29	39	49
Efficacy (lm/W)	74	73	76	73
Color Accuracy (CRI)	83	83	83	83
Est. Lifetime (h ≥ L70)	200,000	200,000	200,000	200,000
Lumen Maintenance per TM21 (@ 60,000 h)	L90	L90	L90	L90

ENDCAPS + DIMENSIONS inches (mm)

BEVEL

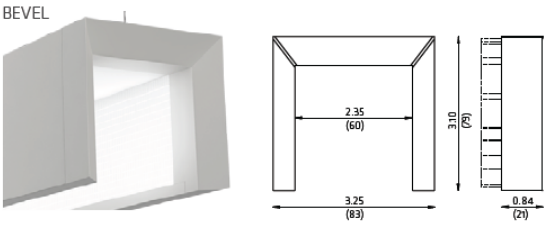

FLAT

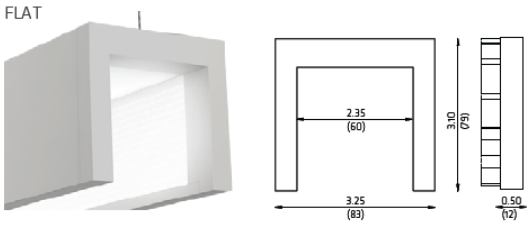

SPECIFICATION

1	2	3	4	5	6	7	8	9	10	11	OPTIONS

1. FAMILY	2. ENDCAP	3. OPTICAL DISTRIBUTION	4. LIGHT + ENERGY	5. CCT	6. FINISH
PR2 Profile	**B** Bevel **F** Flat	Vertical Surface Illumination **A** 100 Dn Asymmetric	**A** 1800 lm + 24 W **B** 2200 lm + 29 W	**35** 3500 K **40** 4000 K	**A** Clear Anodized **B** Black Powdercoat **W** White Powdercoat

Nominal values / 4 ft module at 120 - 277 V AC ; 50 - 60 Hz
For 347 V draw add 4 W to above

7. LENGTH	8. CEILING + MOUNTING INTEGRATION		9. DRIVER	10. VOLTAGE	11. SUSPENSION	OPTIONS
04 4 ft **08** 8 ft **xx** x ft*	Integrated driver with mounting, power feed, suspension + canopy	**D** Drywall **G** Grid **S** Surface **R** Remote	**B** 50% Bi Level [3] **D** 0 - 10 V Dim **L** Lutron [1] **S** Standard	**M** 120 - 277 V **3** 347 V [2, 4]	**03** ≤ 3 ft **06** ≤ 6 ft **12** ≤ 12 ft	**A** Alternate Wiring - AV Presentation Switching - EM/NL or 2 circuit modules **B** Battery Pack [2, 3] **C** Chicago Plenum

* Specify run length in 4' nominal increments

[1] Maximum suspension is ≤ 3' for Lutron drivers. [2] Available for (G) Grid and (R) Remote. [3] Available for 120 - 277V. [4] Lutron + 347 V requires Ecobus controls

All rights reserved.
© Fluxwerx Illumination Inc 2013

Due to continuous product improvements, specifications and dimensions are subject to change without notice. Certain options have limited compatibility with some other product selections. Consult www.fluxwerx.com for most current technical information.

project: Peoria Childrens Museum project #: 13.500.10 prepared for: Jack Rouse Associates prepared by: abernathy lighting design Issue Date: 1-6-2014 Rev. Date:	type **LA** page 1 of 2

Integrated Driver, Mounting, Power Feeds + Suspension

Refer to separate product specification datasheets for detailed dimensions of mounting hardware components, driver enclosures, canopies and wiring

(D) DRYWALL — New or Retrofit

Integrated driver, power feed and mounting suspension points suitable for GWB or plaster thicknesses of < 0.875" (22 mm)

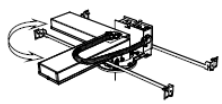

Perpendicular or Parallel

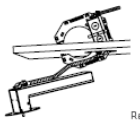

Retrofit Method

- 120-277V
- 347V
- Battery Pack
- 0-10V Dim
- Lutron
- 50% BiLevel

(G) GRID — ON or OFF Grid

Integrated clip, driver, power feed and mounting suspension points suitable for accessible ceiling grid heights of < 1.75" (44mm)

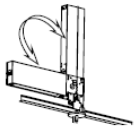

Horizontal or Vertical

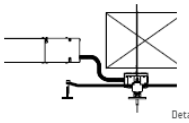

Detached Method

- 120-277V
- 347V
- Battery Pack
- 0-10V Dim
- Lutron
- 50% BiLevel

(S) SURFACE — Hard Lid Ceilings

Integrated driver with mounting, power feed, suspension + canopy suitable for exposed surface conduit or recessed junction boxes

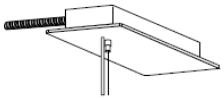

Power Feed Canopy

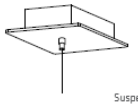

Suspension Canopy

- 120-277V
- 347V
- Battery Pack
- 0-10V Dim
- Lutron
- 50% BiLevel

(R) REMOTE — Hard Lid Ceilings

External remote mounted driver. Power feed and suspension points suitable for exposed conduit or recessed junction boxes

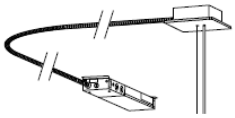

Power Feed

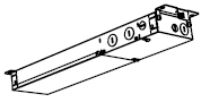

Multivolt 120 - 277 V driver

- 120-277V
- 347V
- Battery Pack
- 0-10V Dim
- Lutron
- 50% BiLevel

Construction

- Anodized, extruded + machined architectural grade aluminum
- Precision machined aluminum joints and endcaps are factory preinstalled for seamless fit
- Stainless steel fasteners
- 1/32" (0.8 mm) stainless steel aircraft cable suspensions
- Clear anodized surface finish or powdercoated in white or black

Optical

- Anidolic optical structures with linear light extraction elements
- Precision injection molded high transmittance clear acrylic lenses
- Long life mid-flux LED system designed for typical TM21 lumen maintenance ≥ L90 @ 60,000 h (see technical data for details)
- Available in CCTs 3500 K or 4000 K with CRI ≥ 80 and R9 ≥ 0, all with color accurate binning ≤ 2 SDCM (see photometric data for details)

Electrical

- No electrical connections are required at fixture level for installation; shipped with LV power cords factory preinstalled
- Agnostic driver design for simple integration with any sensor, lighting control or building energy management system
- High efficiency multivolt drivers for 120–277V or 347V; 50 - 60 Hz integrated with suspension and mounting canopy components
- Power Factor > 0.90
- Total Harmonic Distortion < 20%
- BiLevel Switching: 50 / 100%
- 0 – 10 V Dim Range: 5 - 100% (CCR)
- Optional Battery: Bodine BSL722 rated for ~ 2000 lm @ 90 minutes
- Optional Lutron: Hi-lume A-Series L3D LED drivers for 100 - 1% (PWM) dim range; factory prewired for EcoSystem or 3-wire controls
- DALI : Consult factory for details

Weight

- Fixture Only: ~ 2.0 lb./ft. (3 kg/m)

Warranty

- 5 year limited warranty on all components and workmanship

Environmental

- Designed for use in damp or dry indoor environments with room side operating temperatures of 0 - 30° C (32 - 95° F)

Testing

- IESNA LM79 (NVLAP Certified)
- IESNA LM80 (LED@ 10,000 h)

Approvals

- UL Listed (USA + Canada)
- CCEA Chicago Plenum
- US DOE Lighting Facts (JAN 23014)

Catalogue #: PR2-F-A-A-35-A-04-S-S-M

Lamp: LED by Manufacturer

All rights reserved.
© Fluxwerx Illumination Inc 2013

Due to continuous product improvements, specifications and dimensions are subject to change without notice. Certain options have limited compatibility with some other product selections. Consult www.fluxwerx.com for most current technical information.

project: Peoria Childrens Museum
project #: 13.500.10
prepared for: Jack Rouse Associates
prepared by: abernathy lighting design

Issue Date: 1-6-2014
Rev. Date:

type

LA

AION LED™

A-TRACK LIGHT ENGINE

24V DC
DIMMING
CLASS 2
IP20 DRY LOCATION

LISTED E364348

PROJECT	SPECIFIER
TYPE	ZONE
SKU __ __ 24 - __ __ - LE	NOTE

1. SERIES — 2. COLOR CODE

SUITABLE FOR INSTALLATION WITHIN THE CLOSET STORAGE SPACE (WITH CLOTHING)
ETL (INTERTEK) APPROVED NFPA ATRICLE 410.16 (ALL SECTIONS)
UL LISTED 2108 FILE NUMBER E364348
LUMINAIRE MUST BE INSTALLED IN ACCORDANCE WITH NFPA 70, ARTICLE 410.16

1. SERIES

☐ 8000 SERIES *HIGH OUTPUT*

- ☐ **80**24 83+CRI 6.0W /ft ≤546 Lm/ft
- ☐ **89**24 94+CRI 5.6W /ft ≤463 Lm/ft

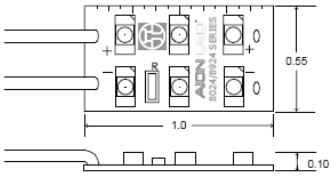

MIN INCREMENT = 1 INCH / MAX PER CIRCUIT = 15 FEET

☐ 4000 SERIES *MID OUTPUT*

- ☐ **40**24 83+CRI 3.0W /ft ≤279 Lm/ft
- ☐ **49**24 94+CRI 2.8W /ft ≤236 Lm/ft

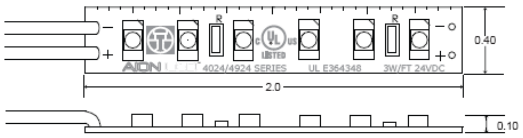

MIN INCREMENT = 2 INCHES / MAX PER CIRCUIT = 30 FEET

☐ 3000 SERIES *LOW OUTPUT* *(INDIRECT APPLICATIONS ONLY)*

- ☐ **30**24 83+CRI 1.5W /ft ≤137 Lm/ft
- ☐ **39**24 94+CRI 1.4W /ft ≤116 Lm/ft

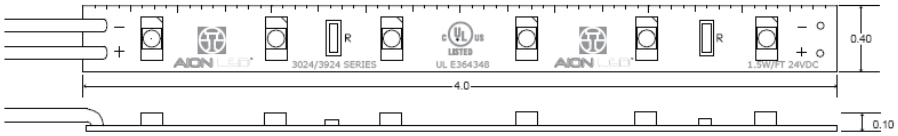

MIN INCREMENT = 4 INCHES / MAX PER CIRCUIT = 32 FEET

2. COLOR

	CCT	COLOR CODE
☐ **94+ CRI WHITE** SINGLE BIN		
☐	2150K 94CRI	**22**
☐	2650K 97CRI	**26**
☐	2950K 97CRI	**29**
☐ **83+ CRI WHITE** SINGLE BIN		
☐	2700K	**27**
☐	3000K	**30**
☐	3500K	**35**
☐	4000K	**40**
☐	6000K	**60**
☐ **COLORS**		
☐	RED	**R**
☐	GREEN	**G**
☐	BLUE	**B**
☐	AMBER	**A**
☐	PINK	**PK**
☐	PURPLE	**PR**

CRI = Color Rendering Index
CCT = CorRelated Color Temperature

Catalogue #: 3024-27-LE + D40-M-24

Lamp: LED by Manufacturer

COMPONENT OF A COMPLETE SYSTEM INCLUDING: AION LED A-TRACK LIGHT ENGINE, AION LED A-TRACK HOUSING WITH DIFFUSER LENS, & AION LED DRIVER (POWER SUPPLY). DIMMER NOT INCLUDED. APPROVED DIMMERS, CONTROLS, POWER SUPPLIES, CABLE, & OTHER COMPONENTS ONLY. CONTACT AION LED FOR QUESTIONS REGARDING COMPATIBILTY. ELECTRICIAN INSTALLED. STRICTLY ADHERE TO NEC & LOCAL BUILDING CODE. LIMITED 5-YEAR WARRANTY AGAINST MANUFACTURING DEFECTS ONLY. DOES NOT COVER LABOR; VOIDED BY: INADEQUATE VENTILLATION, FIELD MODIFICATIONS, INSTALLATION BY UNQUALIFIED PERSONNEL, UNAPPROVED CONTROLS, DRIVERS, CABLING, OTHER DEVICES, NOT FOLLOWING INSTALLATION GUIDELINES & PROTOCOL, GENERAL NEGLIGENCE. INSTALLER ASSUMES ALL LIABILITY WITH REGARD TO PROPERTY & SAFETY. THIS PRODUCT IS UL LISTED. SEE SEPARATE: "AION LED WARRANTY TERMS" & ADDITIONAL INSTRUCTIONAL MATERIALS FOR MORE INFORMATION. AUTHORIZED INSTALLERS ONLY. SYSTEMS TESTED PRIOR TO SHIPPING.

© Copyright 2013 Aion LED, Inc. All Rights Reserved (415) 255-AION (2466) www.AionLED.com

project: Peoria Childrens Museum project #: 13.500.10 prepared for: Jack Rouse Associates prepared by: abernathy lighting design Issue Date: 1-6-2014 Rev. Date:	type **LB**

AION LED

M-SERIES

D40-M & D40-M-24

Constant Voltage LED Driver
Class 2 - Non-dimming
12 & 24 Volt

MODEL	D40-M & D40-M-24
DIMENSIONS (L-W-H) INCHES	(3.75 x 2.75 x 1.25)
OUTPUT (WATTS)	40
SECONDARY BREAKER	Auto-Reset
CLASS 2 (UL STANDARD)	Yes
CASE	DAMP LOCATION
RATING	UL
INPUT VOLTAGE	100-277 VAC
OUTPUT VOLTAGE	12 OR 24 VDC

MAX FEET 3000/ 3024 SERIES	22
MAX FEET 4000/ 4024 SERIES	11
MAX FEET 8024 SERIES	5.5

ELECTRICIAN INSTALLED

1. Constant Voltage output, No minimum load required.
2. May require enclosure -NOT INCLUDED.
3. Fits inside standard 4 x 4 electrical box.
4. Non-dimming transformer.
6. Max feet listing includes 20% headroom.

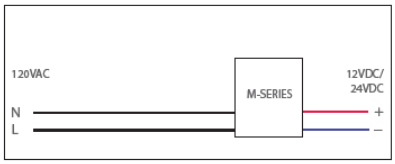

AION LED		SPECIFIER	
SKU		FIRM	
DESC		JOB	
		TYPE	
		MEMO	

Warning: Installation should only be attempted by qualified and authorized personnel. Licensed electricians and trained technicians must wire all components in strict compliance with local building codes. Installer assumes all liability for safety and hazard mitigation. Aion LED is not liable for damages incurred by negligence, faulty wiring, poor design, overloading, or other. Authorized Aion LED Installers are trained in installation methods, materials, and code-related protocol.

AION LED, LLC 2325 3RD ST #330 SAN FRANCISCO, CA 94107 TOLL FREE: (877) 345-AION [2466] FAX: (415) 285-1335 CustomerCare@AionLED.com

© Copyright 2012 Aion LED All Rights Reserved

www.AionLED.com

project: Peoria Childrens Museum project #: 13.500.10 prepared for: Jack Rouse Associates prepared by: abernathy lighting design Issue Date: 1-6-2014 Rev. Date:	type **LB**

HBOX
HOLOPHANE indoor lighting

ORDERING GUIDE

Catalogue #: CIS-42CFL-12-C-1-4-W-3-A-X-C1-Victorian-X White

Lamp: Osram/Sylvania- CF42DT/E/IN/830/ECO

How to construct a catalog number for Illuminaire Series Fixture type _____

EXAMPLE:	ILS	—	400MH	—	12	—	C	—	1	—	4	—	M	—	1	—	C	—	F1	—	IL - ARCH M
	1		2		3		4		5		6		7		8		9		10		11

1 Luminaire Mounting
2 Source and Wattage
3 Voltage
4 Optic Type
5 Glass Colorization
6 Glass Color Area
7 Metal Finish Color
8 Stem Length
9 Cap
10 Options
11 Accessories

project: Peoria Childrens Museum project #: 13.500.10 prepared for: Jack Rouse Associates prepared by: abernathy lighting design Issue Date: 1-6-2014 Rev. Date:	type **PA** page 1 of 10

STEP 1
LUMINAIRE MOUNTING

How to construct a catalog number for Illuminaire Series Fixture type _____

EXAMPLE: ILS — 400MH — 12 — E — 3 — 1 — K — 1 — C — F1 — IL - ARCH H
1 2 3 4 5 6 7 8 9 10 11

1 Luminaire Mounting

Large

ILS	Illuminaire – Surface Mount
ILT	Illuminaire – Recessed Mount
ILI	Illuminaire – Integral Mount
ILR	Illuminaire – Remote Mount

Compact

CIS	Illuminaire – Surface Mount
CIT	Illuminaire – Recessed Mount
CII	Illuminaire – Integral Mount
CIR	Illuminaire – Remote Mount
CIW	Arched wall mount (wet location option available)
CIM	Nautical wall mount

ILS
SURFACE

1 Quick install box: Ballast housing hinges from through-way (or concealed) wiring box for quick labor saving installation and fast maintenance.

2 Die cast aluminum housing: Corrosion resistant polyester powder paint or metallic finishes available. UL listed 40°C damp location, energy efficient copper wound HID ballast.

3 Integral swivel plate: Provides 10° motion in a 360° plane for mounting on sloped ceilings of 10° or less.

CIS
SURFACE

1 Surface plate: Ballast housing hangs from cable to free hands for wire connections. Ballast twists on to plate and is locked in place with screw. Plate mounts to standard 4" box.

2 Die cast aluminum housing: Corrosion resistant polyester powder paint, or metallic finishes available, UL listed 40°C damp location, energy efficient copper wound HID ballast.

3 Integral swivel plate: Provides 10° motion in a 360° plane for mounting on sloped ceilings of 10° or less.

project: Peoria Childrens Museum
project #: 13.500.10
prepared for: Jack Rouse Associates
prepared by: abernathy lighting design

Issue Date: 1-6-2014
Rev. Date:

type
PA

ILI / CII
INTEGRAL

CIW
ARCHED
WALL MOUNT

CIM
NAUTICAL
WALL MOUNT

ILT / CIT
RECESSED

1 Quick install wiring cover: Pre-drilled for DN20NPT (.75") conduit connection, slides on and mates with electrical splice chamber cover.

2 Die cast aluminum housing: Corrosion resistant polyester powder paint fixture UL listed as a recessed type non-IC marked spacing for use in 25°C ambients, energy efficient copper wound HID ballast with thermal overload protector. CFL ballasts available as well.

3 Grid ceiling mounting rails: Positions housing and optics between tee bar runners.

4 Integral swivel plate: Provides a 15° motion in a 360° plane for sloped ceilings of 15° or less, fast connection to, and support of, stem and optical assembly.

5 Canopy: Provides finished appearance at junction of ceiling tile and stem.

6 Stem connection: Pipe of various lengths support optics at specified mounting height.

ILR / CIR
REMOTE

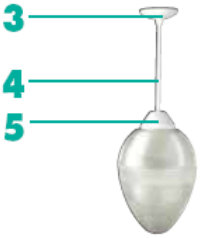

1 Remote ballast: Heavy duty steel housing, with white polyester paint, knockouts, a hook and integral mounting feet.

2 High efficiency electrical components: Low noise, potted, copper wound core and coil HID assembly, capacitor, starter board, and standby relay designed for remote mounting from 4.21m (14') to 6m (20') for pulse metal halide, 3.66m (12') for CFL and 24.38m (80') to 141.7m (465') for standard MH distance from the luminaire. Rated 40°C

3 Canopy: Provides finished appearance at junction of ceiling tile and stem.

4 Stem connection: Pipe of various lengths support optics at specified mounting height.

5 Cap: Covers electrical connections for surface, recessed and remote mountings.

project: Peoria Childrens Museum project #: 13.500.10 prepared for: Jack Rouse Associates prepared by: abernathy lighting design Issue Date: 1-6-2014 Rev. Date:	type **PA** page 3 of 10

STEP 2
SOURCE AND WATTAGE

How to construct a catalog number for Illuminaire Series Fixture type _____

EXAMPLE:	ILS	—	400MH	—	12	—	E	—	3	—	1	—	K	—	1	—	C	—	F1	—	IL - ARCH H
	1		2		3		4		5		6		7		8		9		10		11

2 Source and Wattage

Large and Compact	
70DMH	70W MH, medium base socket
70DEM[1,4]	70W MH, electronic, medium base socket
10DMH	100W MH, medium base socket
10DEM[1,4]	100W MH, electronic, medium base socket
15DMH	150W MH, medium base socket
26CFL	26W Compact fluorescent
42CFL	42W Compact fluorescent
Large Only	
15DEM[1,4]	150W MH, electronic, medium base socket
17DMH	175W MH, medium base socket
175MH	175W MH, mogul base socket
175PM	175W MH, pulse start
250MH	250W MH
250PM	250W MH, pulse start
320PM	320W MH, pulse start
350PM	350W MH, pulse start
35EPM	350W MH, linear reactor pulse start
400MH	400W MH
400PM	400W MH, pulse start
40EPM[4]	400W MH, linear reactor pulse start
52CFL[4]	52W Compact fluorescent
84CFL[4]	84W Compact fluorescent
30DIN	300W Incandescent
500IN	500W Incandescent
Compact Only	
20DIN	200W Incandescent

STEP 3
VOLTAGE

How to construct a catalog number for Illuminaire Series Fixture type _____

EXAMPLE:	ILS	—	400MH	—	12	—	E	—	3	—	1	—	K	—	1	—	C	—	F1	—	IL - ARCH H
	1		2		3		4		5		6		7		8		9		10		11

3 Voltage

12	120 volt
20	208 volt
24	240 volt
27	277 volt
34	347 volt
MT[4]	Multi-voltage (120-277 volt)
VT[4]	Vari-tap (120, 277, 347 volt)

project: Peoria Childrens Museum
project #: 13.500.10
prepared for: Jack Rouse Associates
prepared by: abernathy lighting design

Issue Date: 1-6-2014
Rev. Date:

type
PA

STEP 4
OPTIC TYPE

How to construct a catalog number for Illuminaire Series Fixture type _____

EXAMPLE:	ILS	—	400MH	—	12	—	E	—	3	—	1	—	K	—	1	—	C	—	F1	—	IL - ARCH H
	1		2		3		4		5		6		7		8		9		10		11

4 Optic Type

A	Egg, 60 down/40 up
B[1]	Egg, 75 down/25 up, large optic only
C	Crest, 60 down/40 up
D[1]	Crest, 75 down/25 up, large optic only
E	Tri-Egg, 60 down/40 up
F[1]	Tri-Egg, 75 down/25 up, large optic only
G	Tri-Crest, 60 down/40 up
H[1]	Tri-Crest, 75 down/25 up, large optic only
J	Quad, 50 down/50 up, large optic only
K[1]	Quad, 75 down/25 up, large optic only
L[1]	Quad, 20 down/80 up, large optic only

STEP 5
GLASS COLORIZATION

How to construct a catalog number for Illuminaire Series Fixture type _____

EXAMPLE:	ILS	—	400MH	—	12	—	E	—	3	—	1	—	K	—	1	—	C	—	F1	—	IL - ARCH H
	1		2		3		4		5		6		7		8		9		10		11

5 Glass Colorization

1	Clear (Not available on optics E, F, G, H)
2	Frost
3	Blue
5	Green
X	Special color

Clear Frosted Blue Green

project: Peoria Childrens Museum project #: 13.500.10 prepared for: Jack Rouse Associates prepared by: abernathy lighting design Issue Date: 1-6-2014 Rev. Date:	type **PA** page 5 of 10

STEP 6
GLASS COLOR AREA

How to construct a catalog number for Illuminaire Series Fixture type _____

EXAMPLE:	ILS	—	400MH	—	12	—	E	—	3	—	1	—	K	—	1	—	C	—	F1	—	IL - ARCH H
	1		2		3		4		5		6		7		8		9		10		11

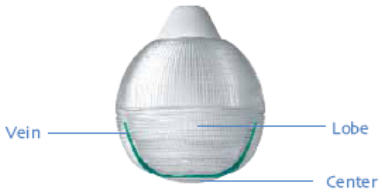

6 Glass Color Area

1	Vein only
2	Vein and center glass only
3	Vein and lobes only
4	Entire optics
5	Center glass only
X	Special coverage area

STEP 7
METAL FINISH COLOR

How to construct a catalog number for Illuminaire Series Fixture type _____

EXAMPLE:	ILS	—	400MH	—	12	—	E	—	3	—	1	—	K	—	1	—	C	—	F1	—	IL - ARCH H
	1		2		3		4		5		6		7		8		9		10		11

Metal Finish Color 7

A	Antique brass vacuum deposited metallic finish
C	Copper paint
H	Chrome vacuum deposited metallic finish
K	Black paint
L	Satin nickel vacuum deposited metallic finish
M	Smoked chrome vacuum deposited metallic finish
R	Copper vacuum deposited metallic finish
S	Satin copper vacuum deposited metallic finish
W	White paint

The colors are approximate.

Cast aluminum parts appear differently from hydro-formed parts when using metallic finishes.

Custom Finishes. Contact your local Holophane factory sales representative for details.

project: Peoria Childrens Museum project #: 13.500.10 prepared for: Jack Rouse Associates prepared by: abernathy lighting design Issue Date: 1-6-2014 Rev. Date:	type **PA** page 6 of 10

STEP 8
STEM LENGTH

How to construct a catalog number for Illuminaire Series Fixture type _____

EXAMPLE:	ILS	400MH	12	E	3	1	K	1	C	F1	IL - ARCH H
	1	2	3	4	5	6	7	8	9	10	11

Remote or Recessed Mount

Stem Length 8

(For surface, remote or recessed mount only)

	Large	Compact
1	18"	18"
2	48"	30"
3	96"	48"
4	18" with swivel. Available ILR only	18" with swivel. Available CIR only
5	48" with swivel. Available ILR only	30" with swivel. Available CIR only
6	96" with swivel. Available ILR only	48" with swivel. Available CIR only
X	Special stem lengths in increments of 25mm (1")	
XS	Special stem lengths with swivel available in increments of 25mm (1"). Available ILR/CIR only	

STEP 9
CAPS

How to construct a catalog number for Illuminaire Series Fixture type _____

EXAMPLE:	ILS	400MH	12	E	3	1	K	1	C	F1	IL - ARCH H
	1	2	3	4	5	6	7	8	9	10	11

Caps 9

(Not applicable with ILI, CII, CIM, and CIW)

A	Standard
B	Crescent
C	Notched
D	Hexagonal
E	Angled

Standard

Crescent

Notched

Hexagonal

Angled

project: Peoria Childrens Museum project #: 13.500.10 prepared for: Jack Rouse Associates prepared by: abernathy lighting design Issue Date: 1-6-2014 Rev. Date:	type **PA** page 7 of 10

STEP 10
OPTIONS

How to construct a catalog number for Illuminaire Series Fixture type _____

EXAMPLE:	ILS	—	400MH	—	12	—	E	—	3	—	1	—	K	—	1	—	C	—	F1	—	IL - ARCH H
	1		2		3		4		5		6		7		8		9		10		11

Options 10

PF-396	Safety hook. Available with ILI only
PF-398	Safety hook. Available with CII only
PF-397	Loop. Available with ILI only
PF-399	Loop. Available with CII only
CDP-L5-15-X-PT (120V)[6]	120V, three conductor cord and NEMA plug (order "PF" also) X = 3', 6' or 10' standard length
CDP-L6-15-X-PT (208/240V)[6]	208/240V, three conductor cord and NEMA plug (order "PF" also) X = 3', 6' or 10' standard length
CDP-L7-15-X-PT (277V)[6]	277V, three conductor cord and NEMA plug (order "PF" also) X = 3', 6' or 10' standard length
CDP-L24-20-X-PT (347V)[6]	347V, three conductor cord and NEMA plug (order "PF" also) X = 3', 6' or 10' standard length
HFW	Holoflex® flexible wiring system (Holoflex or Holoflex II available through TSG) Not available with CIS, CIW, or CIM
F1[5]	Single fuse assembly for 120, 240, 277, or 347V. Not available with "MT"
F2[5]	Double fuse assembly for 208, or 240V. Not available with "MT"
C3	3' of safety chain, electrical assembly only. Integral and surface mount only
C6	6' of safety chain, electrical assembly only. Integral and surface mount only
C1	10' of safety chain, electrical assembly only. Integral and surface mount only
H[5]	HALT® Automatic lamp time-out. Available on a limited number of fixtures
EM[5]	Standby lighting fixture uses a D.C. bayonet base, 250W (max.) tungsten halogen lamp (included) to provide standby lighting
ER[5]	Emergency lighting fixture less relay for use with a 120V external power source to operate a D.C. 250W (max.) bayonet base tungsten halogen lamp (included) to provide emergency lighting. (All fixtures except "-CDP") Not available with CII or ILI

STEP 11
ACCESSORIES

How to construct a catalog number for Illuminaire Series Fixture type _____

EXAMPLE:	ILS	—	400MH	—	12	—	E	—	3	—	1	—	K	—	1	—	C	—	F1	—	IL - ARCH H
	1		2		3		4		5		6		7		8		9		10		11

Accessories 11

Arch

Victorian

Traditional

Wrought

Large	Compact	
LAMP	LAMP	Appropriate HID lamp supplied with fixtures
IL-Arch-X[2, 7]	CI-Arch-X[2, 7]	Arch decorative claw. Not available on Quad.
IL-Victorian-X[2, 7]	CI-Victorian-X[2, 7]	Victorian decorative claw. Not available on Quad.
IL-Traditional-X[2, 7]	CI-Traditional-X[2, 7]	Traditional decorative claw. Not available on Quad.
IL-Wrought-X[2, 7]	CI-Wrought-X[2, 7]	Wrought decorative claw. Not available on Quad.
F1	F1	Single fuse assembly for 120, 240, 277, or 347V
F2	F2	Double fuse assembly for 208, or 240V.

Notes:
1. Available in 120 and 277V only
2. Contains internal Miro4 reflector. Single configuration CFL lamps only.
3. "X" must be replaced with a Finish designator
4. Not available in ILR version
5. Available with 70DMH, 100MH, 150MH, 175MH, 175PM, 250PM, 320PM, 350PM, 400MH and 400PM
6. Available with ILI and CII version only
7. Not applicable with ILI, CII, CIM or CIW

project: Peoria Childrens Museum project #: 13.500.10 prepared for: Jack Rouse Associates prepared by: abernathy lighting design Issue Date: 1-6-2014 Rev. Date:	type **PA** page 8 of 10

Dimensional Details

Large Version

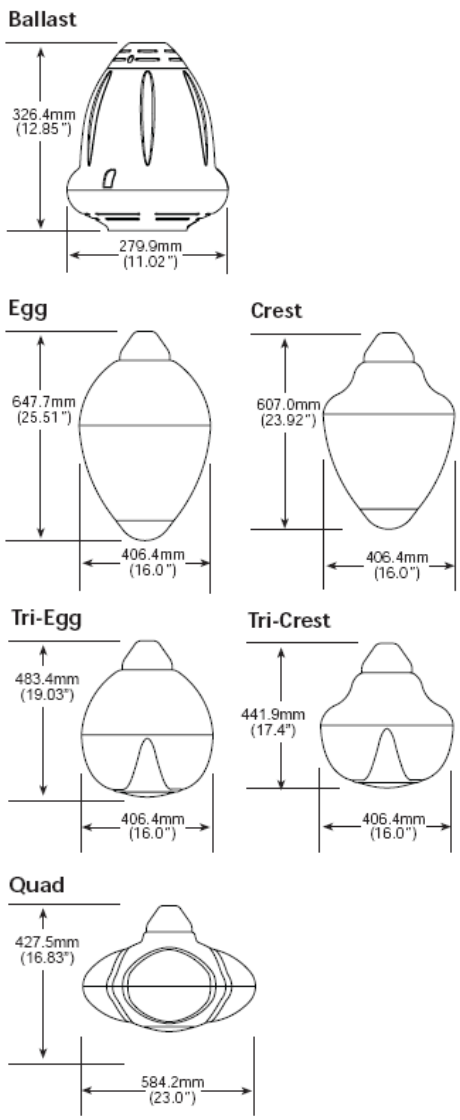

Dimensional Details

Compact Version

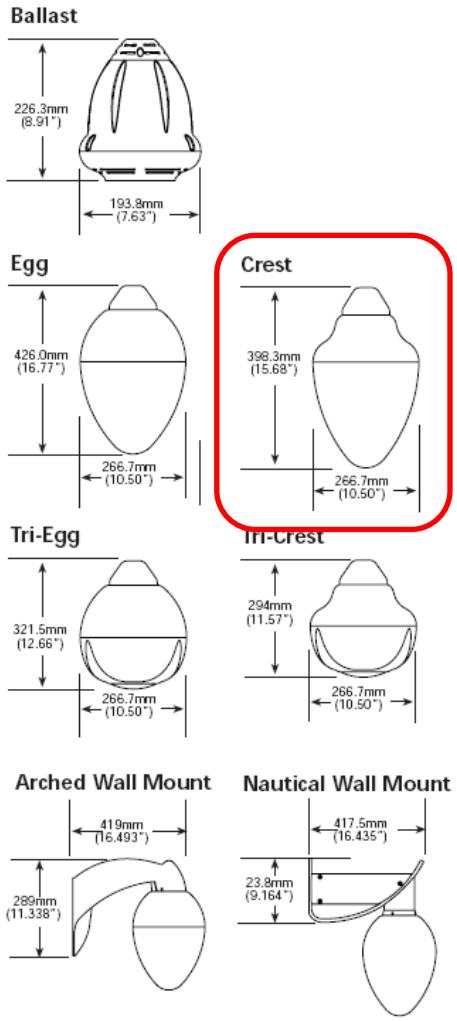

project: Peoria Childrens Museum project #: 13.500.10 prepared for: Jack Rouse Associates prepared by: abernathy lighting design Issue Date: 1-6-2014 Rev. Date:	type **PA** page 9 of 10

Illuminaire®

The New Shape of Light™

HOLOPHANE®
LEADER IN LIGHTING SOLUTIONS
An Acuity Brands Company

Acuity Lighting Group, Inc.
214 Oakwood Ave., Newark, OH 43055 / Holophane Canada, Inc. 9040 Leslie Street, Suite 208, Richmond Hill, ON L4B 3M4 / Holophane Europe Limited, Bond Ave., Milton Keynes MK1 1JG, England / Holophane, S.A. de C.V., Apartado Postal No.

Contact your local Holophane factory sales representative for application assistance, and computer-aided design and cost studies. For information on other Holophane products and systems, call the Inside Sales Service Department at 740-345-9631. In Canada call 905-707-5830 or fax 905-

Limited Warranty and Limitation of Liability Refer to the Holophane limited material warranty and limitation of liability on this product, which are published in the "Terms and Conditions" section of the current product digest, and is available from your local Holophane sales representative.

THE Nauset Lantern Shop

Shedding Light on Cape Cod's Heritage

Onion lanterns > **Onion Hanging**

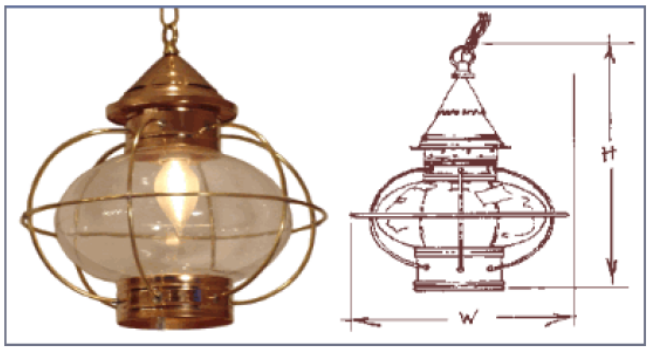

The Hanging Onion Lantern is an adaptation of an onion lantern first used in this country on fishing schooners as nighttime working lights. They were popular, as the onion globe, by design, was unbreakable and protected the flame from wind and rain. Available in clear, seedy or optic lens. Ceiling canopy measures 5" diameter by 1.5" high.

Catalogue #: Onion Hanging Lantern w/ Copper finish, clear glass optic, and 2' chain- small

Lamp: TCP-LED5E26B1127KF

To Buy: Click the radio button ○ next to the size you would like to purchase. Next, select the options you desire, then click Buy to add the item to your shopping cart.

	Sizes	Height - Width - Depth	Copper	Brass	Pewter
○	Extra small	10.5" - 8.0" - "	$219.00	$252.00	$285.00
○	Small	12.0" - 10.0" - "	$269.00	$309.00	$350.00
○	Medium	13.5" - 13.0" - "	$339.00	$389.00	$441.00
◉	Large	15.0" - 14.5" - "	$429.00	$493.00	$558.00

Customize your lantern

Select your options below, then click "buy". **To see pictures of the various options**, click the photo icon ( ) next the option name.

Quantity: 1

Metal: copper

Seedy and Optic glass prices for Onion Hanging - X-Small + $10, Small + $15, Medium + $20, Large + $25

If Seedy or Optic glass is selected, the extra charge will be added at checkout.

Glass: Clear glass

Chain: 2' + $12

Our shopping cart is off line while we repair and update some new features. Please call 508-255-1009 so I can take your order in person.

Michael Joly, Coppersmith

Best Sellers!

ONION LANTERNS: Onion Wall, Onion Post, Onion Hanging
CAPE COD LANTERNS: Cape Cod Wall, Cape Cod Post
COLONIAL LANTERNS: Williamsburg Wall, Williamsburg Post, Pilgrim Wall, Pilgrim Post
EARLY AMERICAN LANTERNS: Concord Wall, Boston Wall, Lexington Wall, Beacon Hill Post

Manufactured with UL approved components.

The Nauset Lantern Shop
52 Route 6A, P.O. Box 1198 - Orleans, MA 02653-1198
800-899-2660 - fax: 508-240-7157
info@nausetlantern.com

TCP PRO — LED Dimmable Decorative Series

LED	25,000 Hours average rated life, 120Volts

Catalog Number	
Notes	Type

Applications:

Ideal for decorative dimming applications. Suitable for outdoor fixtures.
Also perfect for applications with hard to reach areas, vibration, and frequent starts.

Accent and decorative lighting including:

- Chandeliers
- Ceiling Fans
- Decorative
- Indoor Fixtures
- Outdoor Fixtures

Light output equivalent to 25W.

Features and Benefits

- Long Life: 25,000 hours – no more bulb replacements!
- Fully dimmable, brilliant LED light.
- Excellent white color consistency from bulb to bulb
- UL approved for dry and damp locations.
- Available in E12 and E26 base.

** Three or more lamps per dimming circuit is recommended fo optimal dimming.*

Specifications (at full brightness)

Input Line Voltage:	120VAC
Input Line Frequency	60HZ
Lamp Life (Rated)	25,000 hrs
Minimum Starting Temp	-30°C
Maximum Operating Temp	40°C
UL/cUL Listed	Yes
Power Factor	92%
CRI	82

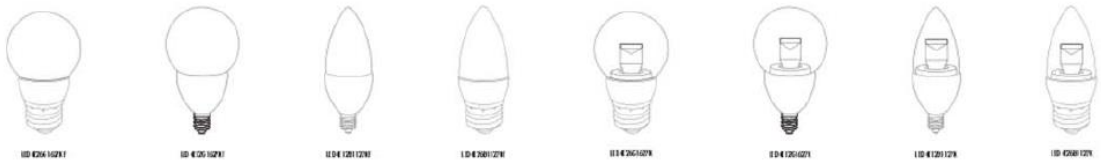

Warranties and Certifications:		Item #	Description	Voltage	Wattage	Wattage Equivalent	M.O.L. (inches)	Diameter (inches)	Lumens	LPW	CCT	CRI
3 YEAR WARRANTY	5W	LED5E12B1127K	LED 5W DIMMABLE CANDELABRA BLUNT TIP - 2700K	120	5.0	40W	3.8	1.4	300	60	2700K	82
		LED5E26B1127K	LED 5W DIMMABLE BLUNT TIP - 2700K	120	5.0	40W	3.8	1.4	300	60	2700K	82
		LED5E12B1127KF	LED 5W DIMMABLE CANDELABRA FROSTED BLUNT TIP - 2700K	120	5.0	40W	3.8	1.4	300	60	2700K	82
		LED5E26B1127KF	LED 5W DIMMABLE FROSTED BLUNT TIP - 2700K	120	5.0	40W	3.8	1.4	300	60	2700K	82
		LED5E12G1627K	LED 5W DIMMABLE CANDELABRA G16 GLOBE - 2700K	120	5.0	40W	3.5	2.0	300	60	2700K	82
		LED5E26G1627K	LED 5W DIMMABLE G16 GLOBE - 2700K	120	5.0	40W	3.5	2.0	300	60	2700K	82
		LED5E12G1627K	LED 5W DIMMABLE CANDELABRA FROSTED G16 GLOBE - 2700K	120	5.0	40W	3.5	2.0	300	60	2700K	82
		LED5E26G1627K	LED 5W DIMMABLE FROSTED G16 GLOBE - 2700K	120	5.0	40W	3.5	2.0	300	60	2700K	82
	4W	LED4E12B1127K	LED 4W DIMMABLE CANDELABRA BLUNT TIP - 2700K	120	3.7	25W	3.8	1.4	200	50	2700K	82
		LED4E26B1127K	LED 4W DIMMABLE BLUNT TIP - 2700K	120	3.7	25W	3.8	1.4	200	50	2700K	82
		LED4E12B1127KF	LED 4W DIMMABLE CANDELABRA FROSTED BLUNT TIP - 2700K	120	3.7	25W	3.8	1.4	200	50	2700K	82
		LED4E26B1127KF	LED 4W DIMMABLE FROSTED BLUNT TIP - 2700K	120	3.7	25W	3.8	1.4	200	50	2700K	82
		LED4E12G1627K	LED 4W DIMMABLE CANDELABRA G16 GLOBE - 2700K	120	3.7	25W	3.5	2.0	200	50	2700K	82
		LED4E26G1627K	LED 4W DIMMABLE G16 GLOBE - 2700K	120	3.7	25W	3.5	2.0	200	50	2700K	82
		LED4E12G1627K	LED 4W DIMMABLE CANDELABRA FROSTED G16 GLOBE - 2700K	120	3.7	25W	3.5	2.0	200	50	2700K	82
		LED4E26G1627K	LED 4W DIMMABLE FROSTED G16 GLOBE - 2700K	120	3.7	25W	3.5	2.0	200	50	2700K	82

TCP, Inc.
325 Campus Dr. | Aurora, Ohio 44202 | P: 1-800-324-1496 | F: 330-995-6188 | tcpi.com

© TCP, Inc. JAN 2013/49558

CELEBRATING 20 YEARS OF ENERGY STAR

project: Peoria Childrens Museum project #: 13.500.10 prepared for: Jack Rouse Associates prepared by: abernathy lighting design Issue Date: 1-6-2014 Rev. Date:	type **PB**

SHADES OF LIGHT

1(800)262-6612 CONTACT US LOCATIONS ACCOUNT CART SEARCH

LIGHTING | LAMP SHADES | RUGS | HOME DECOR | MIRRORS | NEW ITEMS | SALES & SPECIALS | CONTRACT & HOSPITALITY

PRINTABLE VERSION

PREVIOUS NEXT

Size & Color Options

Chicken Wire Basket Pendant Light

This bronze chicken wire basket pendant goes rustic, industrial or shabby chic! (12"Hx19"W) 60 watt medium base lamp required. 6' Black cord. Black canopy.

Black

Exclusively Ours

Product SKU: PE12028 BK

Price: $189.00

Quantity 1 Black $189.00

Catalogue #: PE12028 BK

Lamp: Osram/Sylvania LED20A21/DIM/0/827

No reviews yet! 42 336

ADD TO CART

Add A Review

Your name:

Your Vote:

Your review:

SAVE REVIEW

Send This Product To A Friend

Your name:

Your e-mail:

Recipient's email:

SHARE ITEM

Customer Reviews

There have been no reviews for this product.

JOIN OUR EMAIL LIST FOR EXCLUSIVE PRODUCT PREVIEWS AND OFFERS Enter your email

SHOP

LIGHTING
Antique Lighting
Bathroom & Vanity
Ceiling & Flush Mounts
Ceiling Medallions
Chandeliers
Children's
Dorm Décor
Energy Star
Exclusive Lighting
Fans
Floor Lamps
Green Lights & Eco Home
Holiday Lighting & Gift Ideas
Lanterns
Light Bulbs
Lighting Accessories
One of a Kind Finds
Outdoor
Pendants & Hanging Lights
Picture Lights & Art Lights
Sale Lighting
Sconce & Wall Lights
Swing Arm Wall Lamps
Table Lamps

SHADES
All Lamp Shades
Chandelier Shades
Exclusive Shades
Floor Lamp Shades
Pendant Shades
Swing Arm Lampshades and Candlestick Lampshades
Table Lamp Shades

FURNITURE
Accent Pillows
Exclusive Home Decor
Fine Art and Wall Decor
Unique Accent Furniture
Wall Clocks

RUGS
All Rugs
By Color
By Style
Exclusive Rugs
Rug Pads
Rug Runners
Sale Rugs

MIRRORS

SALES
Sales & Specials
Email
Lighting Sale Items
Rug Sale Items
Weekly Special

CONTRACT

FIND OUT MORE
Request A Catalog
Virtual Catalog
Current Email Offers
Inspired Spaces Home
Inspired Blog
Friends' Homes
Editor's Choice
Tips & Techniques
Gift Certificates
Become Our Friend on Facebook

CUSTOMER SERVICE
About Us
Contact Us
My Account
Retail Locations
Customer Testimonials
Shipping Information
Returns & Exchanges
Privacy Statement
Terms & Conditions
Jobs

project: Peoria Childrens Museum project #: 13.500.10 prepared for: Jack Rouse Associates prepared by: abernathy lighting design Issue Date: 1-6-2014 Rev. Date:	type **PC**

www.sylvania.com/ledr

ULTRA LED A-line Lamps
Omnidirectional

Rated up to 25,000 hours at 70% lumen maintenance, SYLVANIA ULTRA LED A-line omnidirectional lamps offer years of service and reduce energy and maintenance costs. SYLVANIA ULTRA LED lamps are environmentally preferred products. They are RoHS compliant and contain no mercury, lead or other hazardous materials. They emit no UV or IR radiation. A CRI of 80 ensures good color definition and with warm white 2700K CCT, these lamps can be used in many applications in both homes and businesses.

Key Features & Benefits

- Dimmable down to 10%*
- Long life: up to 25,000 hours (L_{70})
- UV and IR free
- Mercury and lead free
- RoHS compliant
- Available in 2700K color temperature
- Suitable for indoor environments only
- Reduces energy consumption up to 82%
- Last up to 33 times longer than incandescent lamps
- No warm-up time, instant-on with full light output and stable color

* Performance may vary depending on dimmer used in application. Please refer to Dimmer Compatibility List (RETRO-DIM) for a list of compatible dimmers or visit www.SYLVANIA.com/LEDRetrofit

Product Offering

Ordering Abbreviation	Wattage	Color Temperature	Typical Lumens
LED8A19/DIM/O/827	8	2700K	470
LED12A19/DIM//O/827	12	2700K	820
LED14A19/DIM/O/827	14	2700K	1100
LED20A21/DIM/O/827	20	2700K	1600

Application Information

Applications
- Downlights
- Pendant fixtures
- Table lamps
- Wall sconces

Market Segments
- Healthcare
- Hospitality
- Residential
- Retail

Application Notes
1. Operating temperature range between -20°C and +45°C (-4°F and + 113°F)
2. Not for use with emergency light fixtures or exit lights
3. Use in open fixture
4. Suitable for indoor use

This device complies with part 15 of the FCC Rules. Operation is subject to the following two conditions: (1) This device may not cause harmful interference, and (2) this device must accept any interference received, including interference that may cause undesired operation. For FCC Part 15 user information, please see www.sylvania.com/fcc15b.

SEE THE WORLD IN A NEW LIGHT SYLVANIA

RETRO053R8 1-13

Specification Data

Catalog #	Type
Project	
Comments	
Prepared by	

Ordering Information

Item Number	Ordering Abbreviation	Wattage (W)	Base Type	Replaces	Input Voltage (V)	Average Rated Life (hrs.)[1]	CCT[3]	Typical Lumens (lm)[2]	CRI[4]	Power Factor	Bulb Finish	ENERGY STAR®
78935	LED8A19/DIM/0/827	8	Medium	40WA19	120	25,000	2700K	470	80	.95	Frosted	Yes
78907	LED12A19/DIM/0/827	12	Medium	60WA19	120	25,000	2700K	820	80	.95	Frosted	Yes
78911	LED14A19/DIM/0/827	14	Medium	75WA19	120	25,000	2700K	1100	80	.98	Frosted	No
78951	LED20A21/DIM/0/827	20	Medium	100WA19	120	25,000	2700K	1600	81	.98	Frosted	No

OSRAM SYLVANIA submits most lamps for ENERGY STAR testing. Early qualification for ENERGY STAR lamps begin at 25,000 hours (L_{70}) regardless that the design of the lamp is manufactured for a greater life expectancy. As the lamps pass ENERGY STAR qualifications, manufacturers are able to increase rated life as dictated by ENERGY STAR guidelines becoming either provisionally qualified or fully qualified. Please visit ENERGYSTAR.gov for more information about testing requirements for ENERGY STAR qualified products.

1. Hours lifetime with 70% (L_{70}) lumen maintenance 2. Thermally stable typical lumens (±10%)
3. Thermally stable typical CCT (±10%) 4. CRI – Color Rendering Index

Ordering Guide

LED	8	A19	/	DIM	/	0	/	827
LED Lamps	Wattage: 8	Lamp Type: A19/A21		Dimmable		Omnidirectional		CRI, CCT: 827: 80+ CRI, 2700K CCT

Lamp Dimensions

	(A) MOL (inches)	(B) Diameter (inches)
LED8A19	4.42	2.44
LED12A19	4.42	2.44
LED14A19	4.42	2.44
LED20A21	5.29	2.99

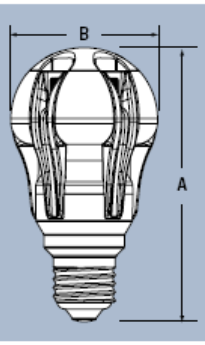

Energy Savings

Basic Product Description	LED Life (hrs.)	LED Lumens	Similar Incandescent	Incandescent Lumens	Incandescent Life (hrs.)	Watts Saved	Energy Savings*	LED Life vs. Incandescent
LED8A19	25,000	470	40W A19	465	1500	32	$ 88.00	>16x
LED12A19	25,000	820	60W A19	850	1000	48	$132.00	25x
LED14A19	25,000	1100	75W A19	1170	750	61	$167.75	>33x
LED20A21	25,000	1600	100W A19	1690	750	80	$220.00	> 33x

*Energy savings over life of lamp calculated at $0.11/kWh

REJUVENATION
LIGHTING & HOUSE PARTS

10 Shaded String Lights Item #A0021

http://www.rejuvenation.com/s/75hc

Specification Detail

Item #	A0021
Width	132"

* Total length: 11'
* Cord lead-in to first bulb: 12"
* Cord lead-out from last bulb: 12"
* Distance between bulbs: 12"
* Max wattage: 5W per bulb
* Shade: Diameter 4-1/2" x Height 1-3/4

Price as shown: $59.00

Catalogue #: A0021

Lamp: TCP- LED5E12B1127KF

project: Peoria Childrens Museum project #: 13.500.10 prepared for: Jack Rouse Associates prepared by: abernathy lighting design Issue Date: 1-6-2014 Rev. Date:	type **PD**

TCP PRO — LED Dimmable Decorative Series

LED	25,000 Hours average rated life, 120Volts

Catalog Number	
Notes	Type

Applications:

Ideal for decorative dimming applications. Suitable for outdoor fixtures.
Also perfect for applications with hard to reach areas, vibration, and frequent starts.

Accent and decorative lighting including:

- Chandeliers
- Ceiling Fans
- Decorative
- Indoor Fixtures
- Outdoor Fixtures

Light output equivalent to 25W.

Features and Benefits

- Long Life: 25,000 hours – no more bulb replacements!
- Fully dimmable, brilliant LED light.
- Excellent white color consistency from bulb to bulb
- UL approved for dry and damp locations.
- Available in E12 and E26 base.

*Three or more lamps per dimming circuit is recommended fo optimal dimming.

Specifications (at full brightness)

Input Line Voltage:	120VAC
Input Line Frequency	60HZ
Lamp Life (Rated)	25,000 hrs
Minimum Starting Temp	-30°C
Maximum Operating Temp	40°C
UL/cUL Listed	Yes
Power Factor	92%
CRI	82

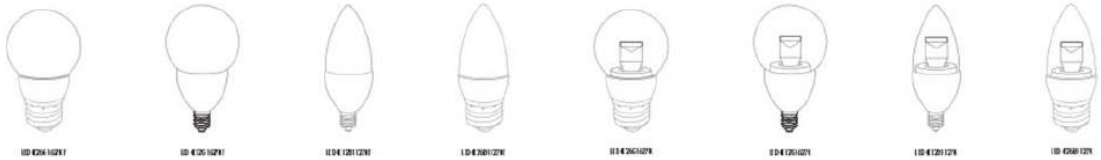

Warranties and Certifications:		Item #	Description	Voltage	Wattage	Wattage Equivalent	M.O.L. (inches)	Diameter (inches)	Lumens	LPW	CCT	CRI
3 YEAR WARRANTY	5W	LED5E12B1127K	LED 5W DIMMABLE CANDELABRA BLUNT TIP - 2700K	120	5.0	40W	3.8	1.4	300	60	2700K	82
		LED5E26B1127K	LED 5W DIMMABLE BLUNT TIP - 2700K	120	5.0	40W	3.8	1.4	300	60	2700K	82
		LED5E12B1127KF	LED 5W DIMMABLE CANDELABRA FROSTED BLUNT TIP - 2700K	120	5.0	40W	3.8	1.4	300	60	2700K	82
		LED5E26B1127KF	LED 5W DIMMABLE FROSTED BLUNT TIP - 2700K	120	5.0	40W	3.8	1.4	300	60	2700K	82
		LED5E12G1627K	LED 5W DIMMABLE CANDELABRA G16 GLOBE - 2700K	120	5.0	40W	3.5	2.0	300	60	2700K	82
		LED5E26G1627K	LED 5W DIMMABLE G16 GLOBE - 2700K	120	5.0	40W	3.5	2.0	300	60	2700K	82
		LED5E12G1627K	LED 5W DIMMABLE CANDELABRA FROSTED G16 GLOBE - 2700K	120	5.0	40W	3.5	2.0	300	60	2700K	82
		LED5E26G1627K	LED 5W DIMMABLE FROSTED G16 GLOBE - 2700K	120	5.0	40W	3.5	2.0	300	60	2700K	82
	4W	LED4E12B1127K	LED 4W DIMMABLE CANDELABRA BLUNT TIP - 2700K	120	3.7	25W	3.8	1.4	200	50	2700K	82
		LED4E26B1127K	LED 4W DIMMABLE BLUNT TIP - 2700K	120	3.7	25W	3.8	1.4	200	50	2700K	82
		LED4E12B1127KF	LED 4W DIMMABLE CANDELABRA FROSTED BLUNT TIP - 2700K	120	3.7	25W	3.8	1.4	200	50	2700K	82
		LED4E26B1127KF	LED 4W DIMMABLE FROSTED BLUNT TIP - 2700K	120	3.7	25W	3.8	1.4	200	50	2700K	82
		LED4E12G1627K	LED 4W DIMMABLE CANDELABRA G16 GLOBE - 2700K	120	3.7	25W	3.5	2.0	200	50	2700K	82
		LED4E26G1627K	LED 4W DIMMABLE G16 GLOBE - 2700K	120	3.7	25W	3.5	2.0	200	50	2700K	82
		LED4E12G1627K	LED 4W DIMMABLE CANDELABRA FROSTED G16 GLOBE - 2700K	120	3.7	25W	3.5	2.0	200	50	2700K	82
		LED4E26G1627K	LED 4W DIMMABLE FROSTED G16 GLOBE - 2700K	120	3.7	25W	3.5	2.0	200	50	2700K	82

TCP, Inc.
325 Campus Dr. | Aurora, Ohio 44202 | P: 1-800-324-1496 | F: 330-995-6188 | tcpi.com
© TCP, Inc. JAN 2013/49558

CELEBRATING 20 YEARS OF ENERGY STAR

project: Peoria Childrens Museum project #: 13.500.10 prepared for: Jack Rouse Associates prepared by: abernathy lighting design Issue Date: 1-6-2014 Rev. Date:	type **PD**

Incandescent **Cuddle** **Pendants**

	Type	
	-09	-20
P5036	☐	☐

Catalog No.	Finish: Brushed Nickel	Finish: Antique Bronze	Lamping	Dimensions (Inches) A	B	C
P5036	-09	-20	1 (m) 100w	16	9-1/4	75-1/4

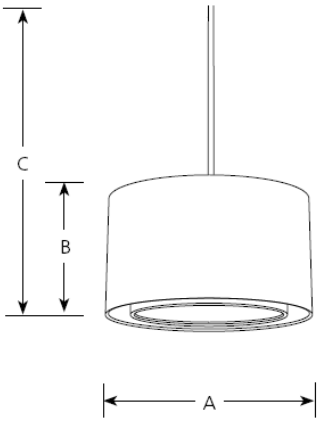

Specifications:

General

- White mylar exterior shade with white linen interior shade: 16" dia., 9-1/4" ht.
- Plated Brushed Nickel (-09) finish
- Painted Antique Bronze (-20) finish
- Steel construction
- 6 links of 9 gauge chain supplied.
- One 6", two 12" lengths of stem included
- Companion Pendant, Sconce, fixtures are available

Mounting

- Ceiling stem mounted with 6 links of chain mount
- Canopy covers a standard 4" hexagonal recessed outlet box: 4-7/8" dia., 13/16" ht.
- Mounting strap for outlet box included

Catalogue #: P5036-09 with Brushed Nickel finish

Lamp: Osram/Sylvania LED20A21/DIM/0/827

Progress Lighting
701 Millennium Blvd.
Greenville, South Carolina
29607

www.progresslighting.com

Rev. 08/13

project: Peoria Childrens Museum project #: 13.500.10 prepared for: Jack Rouse Associates prepared by: abernathy lighting design Issue Date: 1-6-2014 Rev. Date: 1-23-2014	type **PF**

www.sylvania.com/ledr

ULTRA LED A-line Lamps
Omnidirectional

Rated up to 25,000 hours at 70% lumen maintenance, SYLVANIA ULTRA LED A-line omnidirectional lamps offer years of service and reduce energy and maintenance costs. SYLVANIA ULTRA LED lamps are environmentally preferred products. They are RoHS compliant and contain no mercury, lead or other hazardous materials. They emit no UV or IR radiation. A CRI of 80 ensures good color definition and with warm white 2700K CCT, these lamps can be used in many applications in both homes and businesses.

Key Features & Benefits

- Dimmable down to 10%*
- Long life: up to 25,000 hours (L_{70})
- UV and IR free
- Mercury and lead free
- RoHS compliant
- Available in 2700K color temperature
- Suitable for indoor environments only
- Reduces energy consumption up to 82%
- Last up to 33 times longer than incandescent lamps
- No warm-up time, instant-on with full light output and stable color

* Performance may vary depending on dimmer used in application. Please refer to Dimmer Compatibility List (RETRO-DIM) for a list of compatible dimmers or visit www.SYLVANIA.com/LEDRetrofit

Product Offering

Ordering Abbreviation	Wattage	Color Temperature	Typical Lumens
LED8A19/DIM/O/827	8	2700K	470
LED12A19/DIM//O/827	12	2700K	820
LED14A19/DIM/O/827	14	2700K	1100
LED20A21/DIM/O/827	20	2700K	1600

Application Information

Applications
- Downlights
- Pendant fixtures
- Table lamps
- Wall sconces

Market Segments
- Healthcare
- Hospitality
- Residential
- Retail

Application Notes
1. Operating temperature range between -20°C and +45°C (-4°F and + 113°F)
2. Not for use with emergency light fixtures or exit lights
3. Use in open fixture
4. Suitable for indoor use

This device complies with part 15 of the FCC Rules. Operation is subject to the following two conditions: (1) This device may not cause harmful interference, and (2) this device must accept any interference received, including interference that may cause undesired operation. For FCC Part 15 user information, please see www.sylvania.com/fcc15b.

SEE THE WORLD IN A NEW LIGHT SYLVANIA

RETRO053R8 1-13

project: Peoria Childrens Museum project #: 13.500.10 prepared for: Jack Rouse Associates prepared by: abernathy lighting design Issue Date: 1-6-2014 Rev. Date: 1-23-2014	type **PF** page 2 of 3

Specification Data

Catalog #	Type
Project	
Comments	
Prepared by	

Ordering Information

Item Number	Ordering Abbreviation	Wattage (W)	Base Type	Replaces	Input Voltage (V)	Average Rated Life (hrs.)[1]	CCT[3]	Typical Lumens (lm)[2]	CRI[4]	Power Factor	Bulb Finish	ENERGY STAR®
78935	LED8A19/DIM/0/827	8	Medium	40WA19	120	25,000	2700K	470	80	.95	Frosted	Yes
78907	LED12A19/DIM/0/827	12	Medium	60WA19	120	25,000	2700K	820	80	.95	Frosted	Yes
78911	LED14A19/DIM/0/827	14	Medium	75WA19	120	25,000	2700K	1100	80	.98	Frosted	No
78951	LED20A21/DIM/0/827	20	Medium	100WA19	120	25,000	2700K	1600	81	.98	Frosted	No

OSRAM SYLVANIA submits most lamps for ENERGY STAR testing. Early qualification for ENERGY STAR lamps begin at 25,000 hours (L_{70}) regardless that the design of the lamp is manufactured for a greater life expectancy. As the lamps pass ENERGY STAR qualifications, manufacturers are able to increase rated life as dictated by ENERGY STAR guidelines becoming either provisionally qualified or fully qualified. Please visit ENERGYSTAR.gov for more information about testing requirements for ENERGY STAR qualified products.

1. Hours lifetime with 70% (L_{70}) lumen maintenance 2. Thermally stable typical lumens (±10%)
3. Thermally stable typical CCT (±10%) 4. CRI – Color Rendering Index

Ordering Guide

LED	8	A19	/	DIM	/	0	/	827
LED Lamps	Wattage: 8	Lamp Type: A19/A21		Dimmable		Omnidirectional		CRI, CCT: 827: 80+ CRI, 2700K CCT

Lamp Dimensions

	(A) MOL (inches)	(B) Diameter (inches)
LED8A19	4.42	2.44
LED12A19	4.42	2.44
LED14A19	4.42	2.44
LED20A21	5.29	2.99

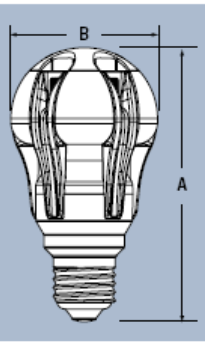

Energy Savings

Basic Product Description	LED Life (hrs.)	LED Lumens	Similar Incandescent	Incandescent Lumens	Incandescent Life (hrs.)	Watts Saved	Energy Savings*	LED Life vs. Incandescent
LED8A19	25,000	470	40W A19	465	1500	32	$ 88.00	>16x
LED12A19	25,000	820	60W A19	850	1000	48	$132.00	25x
LED14A19	25,000	1100	75W A19	1170	750	61	$167.75	>33x
LED20A21	25,000	1600	100W A19	1690	750	80	$220.00	> 33x

*Energy savings over life of lamp calculated at $0.11/kWh

Incandescent **Opal Globes** **Pendants**

Type _____
-29
P4406 ☐

Catalog No.	Finish White	Lamping	Dimensions (Inches) A	B
P4406	-29	1 (m) 150w	14	54

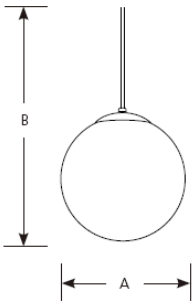

Specifications:

General
- Opal cased glass globes
- Evenly diffused illumination
- White cord canopy and cap

Mounting
- Cord hung ceiling
- Covers outlet box
- Mounting strap furnished for outlet box
- Canopy 5-3/4" dia.

Electrical
- Three conductor SJT cord
- Ceramic socket
- Cord extender (P8625-30) available
- Pre-wired

Labeling
- UL-CUL listed

Catalogue #: P4406

Lamp: Osram/Sylvania
LED20A21/DIM/0/827

Progress Lighting
701 Millennium Blvd.
Spartanburg, South Carolina
29607

www.progresslighting.com

Rev. 11/11

project: Peoria Childrens Museum
project #: 13.500.10
prepared for: Jack Rouse Associates
prepared by: abernathy lighting design

Issue Date: 1-6-2014
Rev. Date: 1-23-2014

type
PG

www.sylvania.com/ledr

ULTRA LED A-line Lamps
Omnidirectional

Rated up to 25,000 hours at 70% lumen maintenance, SYLVANIA ULTRA LED A-line omnidirectional lamps offer years of service and reduce energy and maintenance costs. SYLVANIA ULTRA LED lamps are environmentally preferred products. They are RoHS compliant and contain no mercury, lead or other hazardous materials. They emit no UV or IR radiation. A CRI of 80 ensures good color definition and with warm white 2700K CCT, these lamps can be used in many applications in both homes and businesses.

Key Features & Benefits

- Dimmable down to 10%*
- Long life: up to 25,000 hours (L_{70})
- UV and IR free
- Mercury and lead free
- RoHS compliant
- Available in 2700K color temperature
- Suitable for indoor environments only
- Reduces energy consumption up to 82%
- Last up to 33 times longer than incandescent lamps
- No warm-up time, instant-on with full light output and stable color

* Performance may vary depending on dimmer used in application. Please refer to Dimmer Compatibility List (RETRO-DIM) for a list of compatible dimmers or visit www.SYLVANIA.com/LEDRetrofit

Product Offering

Ordering Abbreviation	Wattage	Color Temperature	Typical Lumens
LED8A19/DIM/0/827	8	2700K	470
LED12A19/DIM//0/827	12	2700K	820
LED14A19/DIM/0/827	14	2700K	1100
LED20A21/DIM/0/827	20	2700K	1600

Application Information

Applications
- Downlights
- Pendant fixtures
- Table lamps
- Wall sconces

Market Segments
- Healthcare
- Hospitality
- Residential
- Retail

Application Notes
1. Operating temperature range between -20°C and +45°C (-4°F and + 113°F)
2. Not for use with emergency light fixtures or exit lights
3. Use in open fixture
4. Suitable for indoor use

This device complies with part 15 of the FCC Rules. Operation is subject to the following two conditions: (1) This device may not cause harmful interference, and (2) this device must accept any interference received, including interference that may cause undesired operation. For FCC Part 15 user information, please see www.sylvania.com/fcc15b.

SEE THE WORLD IN A NEW LIGHT SYLVANIA

RETR0053R8 1-13

project: Peoria Childrens Museum project #: 13.500.10 prepared for: Jack Rouse Associates prepared by: abernathy lighting design Issue Date: 1-6-2014 Rev. Date: 1-23-2014	type **PG** page 2 of 3

Specification Data

Catalog #	Type
Project	
Comments	
Prepared by	

Ordering Information

Item Number	Ordering Abbreviation	Wattage (W)	Base Type	Replaces	Input Voltage (V)	Average Rated Life (hrs.)[1]	CCT[3]	Typical Lumens (lm)[2]	CRI[4]	Power Factor	Bulb Finish	ENERGY STAR®
78935	LED8A19/DIM/0/827	8	Medium	40WA19	120	25,000	2700K	470	80	.95	Frosted	Yes
78907	LED12A19/DIM/0/827	12	Medium	60WA19	120	25,000	2700K	820	80	.95	Frosted	Yes
78911	LED14A19/DIM/0/827	14	Medium	75WA19	120	25,000	2700K	1100	80	.98	Frosted	No
78951	LED20A21/DIM/0/827	20	Medium	100WA19	120	25,000	2700K	1600	81	.98	Frosted	No

OSRAM SYLVANIA submits most lamps for ENERGY STAR testing. Early qualification for ENERGY STAR lamps begin at 25,000 hours (L_{70}) regardless that the design of the lamp is manufactured for a greater life expectancy. As the lamps pass ENERGY STAR qualifications, manufacturers are able to increase rated life as dictated by ENERGY STAR guidelines becoming either provisionally qualified or fully qualified. Please visit ENERGYSTAR.gov for more information about testing requirements for ENERGY STAR qualified products.

1. Hours lifetime with 70% (L_{70}) lumen maintenance 2. Thermally stable typical lumens (±10%)
3. Thermally stable typical CCT (±10%) 4. CRI – Color Rendering Index

Ordering Guide

LED	8	A19	/	DIM	/	0	/	827
LED Lamps	Wattage: 8	Lamp Type: A19/A21		Dimmable		Omnidirectional		CRI, CCT: 827: 80+ CRI, 2700K CCT

Lamp Dimensions

	(A) MOL (inches)	(B) Diameter (inches)
LED8A19	4.42	2.44
LED12A19	4.42	2.44
LED14A19	4.42	2.44
LED20A21	5.29	2.99

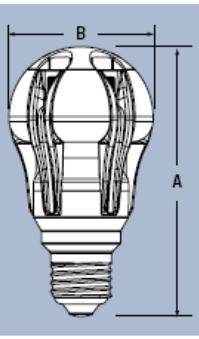

Energy Savings

Basic Product Description	LED Life (hrs.)	LED Lumens	Similar Incandescent	Incandescent Lumens	Incandescent Life (hrs.)	Watts Saved	Energy Savings*	LED Life vs. Incandescent
LED8A19	25,000	470	40W A19	465	1500	32	$ 88.00	>16x
LED12A19	25,000	820	60W A19	850	1000	48	$132.00	25x
LED14A19	25,000	1100	75W A19	1170	750	61	$167.75	>33x
LED20A21	25,000	1600	100W A19	1690	750	80	$220.00	> 33x

*Energy savings over life of lamp calculated at $0.11/kWh

Shaper
shaperlighting.com

DESCRIPTION

461 Starter Collection Solid Aluminum or 461-A Luminous Cylinder Pendants.

Catalog #		Type
Project		
Comments		Date
Prepared by		

SPECIFICATION FEATURES

Material/Mounting
Base metal is solid aluminum. Matte white acrylic cylinder. SJ Cord White (Standard): 4 1/2" x 1/2" canopy for incandescent and CFL. One 3 (INC) or 5 (CFL) conductor clear SJ cord with a standard overall hang height of 24" (OA), minimum 18" (OA) with either a 4 1/2" x 1/2" canopy for incandescent and CFL. Maximum (OA) for CFL is 10'. Optional Clear SJ cord (CSJ).

Finish
Standard: Natural Aluminum (NA) [Sustainable Desgin].
Premium: Gun Metal (GNM), Satin Chrome (SC), Polished Chrome (PC), Satin Brass (SB), Polished Brass (PB), Oxidized Brass (OBRS), Lacquered Satin Aluminum (SAL), Matte White (MW), Satin Copper (SCP), Polished Copper (PCP), Oxidized Copper (OCP), Satin Nickel (SN), Polished Nickel (PN), Clear Anodized Aluminum (CAL) or Custom Color (CC).

Optics
Refer to www.shaperlighting.com for complete photometrics.

Ballast
Integral electronic HPF, multi-volt 120/277V (347V Canada), thermally protected with end-of-life circuitry to accommodate the specified lamp wattage.

Lamp/Socket
461: One (1) 18W (GX24q-2) or 26W (GX24q-3) 4-pin triple CFL lamp or one (1) 100W A-19 or 50PAR20H, 75PAR30H or 90PAR38H lamp
461-A: One (1) 18W (GX24q-2) or 26W (GX24q-3) 4-pin triple CFL lamp or one (1) 75W A-19 lamp. CFL socket injection molded plastic. INC socket fired ceramic rated for 660W-250V. Lamps furnished by others.

Installation
Supplied with a universal circular strap for a standard 4" J-box or plaster ring. Safety cable provided. Shaper luminaires are designed for interior installations only.

Options
Dimming Ballast: Advance Mark 7 (DMA7), Mark 10 (DMA10) or Lutron (DML), Sloped Ceiling Adaptor - Specify up to 45° (SCA), Perf Band - 461-A only (PFB), Two Trim Bars (2TB), Two Trim Bands - Stem only (2BD), Clear SJ Cord (CSJ), Remote Emergency Ballast - Supplied by others (REM), Luminous Band (LUB), MRI Applications (INC only) - Contact factory, Damp Location (DL): All Painted Finishes or Clear Anodized Aluminum (CAL) finish only. Energy Star Rating- Contact factory.

Labels
U.L. and C.U.L approved for indoor and damp location. See options for damp location finishing requirements. Shaper's DL option is for interior applications (only) that have more than average moisture (i.e. bathroom, laundry room, etc.) but are not UL listed for pool, sauna, shower, whirlpool and any exterior applications (i.e. covered garage or building entrance) with exposure to weather elements such as rain, wind, etc.

Modifications
Shaper's skilled craftspeople with their depth of experience offer the designer the flexibility to modify standard pendant luminaires for project specific solutions. Contact the factory regarding scale options, unique finishes, mounting, additional materials/colors, or decorative detailing.

461 SERIES

Pendant Luminaire
Starter Collection
Solid Aluminium or
Luminous Cylinder

STARTER COLLECTION
Shaper's exclusive Starter Collection fixtures are featured throughout the Shaper product line. The concept of offering highly styled, affordable fixtures was introduced over fourteen years ago and has become one of our fastest growing lines. The design premise, basic construction, clean lines and unadorned shapes are highly desirable in modern architectural environments.

SUSTAINABLE DESIGN
Shaper has a long-standing history of offering environmentally-friendly fixtures. The copper and bronze alloys used in our exterior luminaires feature up to 98% re-cycled content, contribute less undesirable air emissions compared to painted aluminum and are easy to recycle.

MAGNETIC RESONANCE IMAGING (MRI)
Lighting fixtures for MRI facilities are specialized and unique, requiring non-ferrous construction. Fluorescent fixtures cannot be used due to the ferrous parts in ballasts and lampholders. Modified incandescent fixtures meet the requirements.

ENERGY STAR
Shaper now offers a wide variety of fixtures that can be provided with an Energy Star Rating.

QUICK SHIP (QS)
Shaper's Quick Ship program features over thirty-four fixtures with finish options such as Satin Chrome, Natural Aluminum and Satin Brass, and a wide variety of lamp selections. All products ship in five days from receipt of order.

Refer to the Icon Legend
Link on shaperlighting.com.

Catalogue #: 461-A-CFL/1/26-120V-NA-CSJ-54”

Lamp: Osram/Sylvania- CF26DT/E/IN/830/ECO

COOPER Lighting
www.cooperlighting.com

Specifications and dimensions subject to change without notice.
Consult your representative for additional options and finishes.

ADS042738
2010-04-22 13:47:49

project: Peoria Childrens Museum project #: 13.500.10 prepared for: Jack Rouse Associates prepared by: abernathy lighting design Issue Date: 1-6-2014 Rev. Date:	type **PH**

ORDERING INFORMATION

Sample Number: 461-CFL/1/18/277V-SAL-24

Series
- 461 =Solid Aluminum Cylinder
- 461-A =Luminous Cylinder

Lamp
- CFL/1/18
- CFL/1/26
- INC/1/75 [1]
- INC/1/100 [2]
- PARH/1/90 [2]

Voltage
- 120V
- 277V [3]
- 347V [3]

Finish

Standard
- NA =Natural Aluminum

Premium
- CAL=Clear Anodized Aluminum
- CC =Custom Color
- GNM =Gun Metal
- MW=Matte white
- OCP =Oxidized Copper
- OBRS =Oxidized Brass
- PB =Polished Brass
- PC =Polished Chrome
- PCP =Polished Copper
- PN =Polished Nickel
- SAL =Lacquered Satin Aluminum
- SB=Satin Brass
- SC =Satin Chrome
- SCP =Satin Copper
- SN=Satin Nickel

Options
- 1S =Single Stem
- 2CL =Double Cluster
- 3CL =Triple Cluster
- 4CL =Four Cluster
- CSJ =Clear SJ Cord
- 2BD =Two Trim Bands [4]
- 2TB =Two Trim Bars
- DL =Damp Location [5]
- DMA7 = Dimming Ballast (Advance Mark 7) [3]
- DMA10= Dimming Ballast (Advance Mark 10) [3]
- DML= Dimming Ballast (Lutron) [3]
- REM =Remote Emergency Ballast [6]
- SCA =Sloped Ceiling Adapter [7]
- LUB =Luminous Band
- PFB =Perforated Band [1]

Suspension Height
- 24"
- or Specify

Notes:
1. Available with 461-A.
2. Available with 461.
3. Available with CFL only.
4. Stem only.
5. Interior applications only.
6. Supplied by others.
7. Specify up to 45°.

DIMENSIONS

Single Stem (1S): 4 1/2" (11.4 cm) x 4 1/2" canopy for incandescent and CFL. One 1/2" (1.2 cm) stem with a standard hang height of 24" (61 cm) (OA), minimum 18" (45.7 cm)(OA). Maximum overall hang height for one piece stem assembly is 8' (OA). 9' to 30' (OA) stems are supplied in multiple sections. Supplied with a self aligning swivel which will accommodate up to 15° (total) adjustment. Specify SCA for sloped ceilings from 15° to 45°.

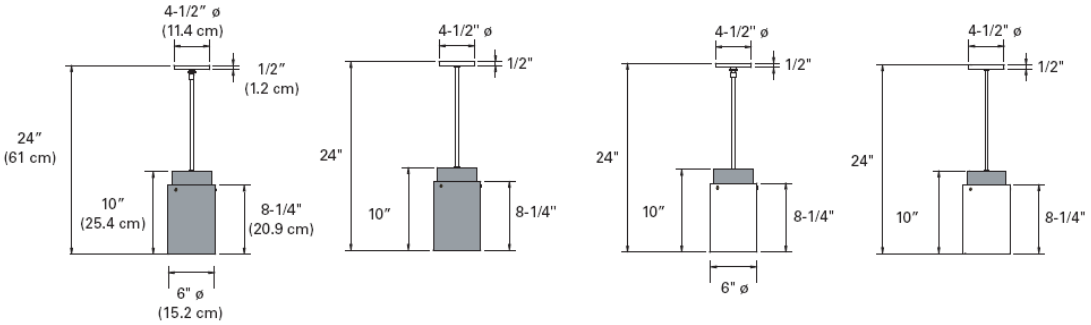

461 SOLID ALUMINUM CYLINDER

461-A LUMINOUS ACRYLIC CYLINDER

project: Peoria Childrens Museum project #: 13.500.10 prepared for: Jack Rouse Associates prepared by: abernathy lighting design Issue Date: 1-6-2014 Rev. Date:	type **PH** page 2 of 4

MULTI-CYLINDER SUSPENSION OPTIONS

Double Cluster (2CL): 10″ (25.4 cm) canopy with a 1-1/2" (3.8 cm) swivel ball. One 1/2" (1.2 cm) stem with a standard hang height of 45" (114.3 cm) (OA), minimum. Maximum overall hang height for one piece stem assembly is 8' (243.8 cm) (OA). 9' (274.3 cm) to 30' (914.4 cm) (OA) stems are supplied in multiple sections. Supplied with a self aligning swivel which will accommodate up to 15° (total) adjustment. Specify SCA for sloped ceilings from 15° to 45°.

Triple Cluster (3CL): 10" canopy with a 1-1/2" swivel ball. One 1/2" stem with a standard hang height of 60" (OA), minimum. Maximum overall hang height for one piece stem assembly is 8' (OA). 9' to 30' (OA) stems are supplied in multiple sections. Supplied with a self aligning swivel which will accommodate up to 15° (total) adjustment. Specify SCA for sloped ceilings from 15° to 45°.

Four Cluster (4CL): 5" canopy with a 1-1/2" swivel ball. One 1/2" stem with a standard hang height of 60" (OA), minimum. Maximum overall hang height for one piece stem assembly is 8' (OA). 9' to 30' (OA) stems are supplied in multiple sections. Supplied with a self aligning swivel which will accommodate up to 15° (total) adjustment. Specify SCA for sloped ceilings from 15° to 45°.

Installation
Cluster Pendants: Supplied with a 5" canopy with swivel ball. Contractor to provide appropriate J-box installation to support 50 lbs. Refer to the installation drawings for details. Integral safety cable provided.

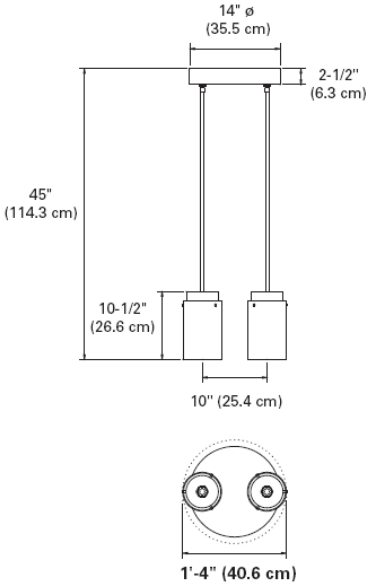

461 DOUBLE CLUSTER (2CL)

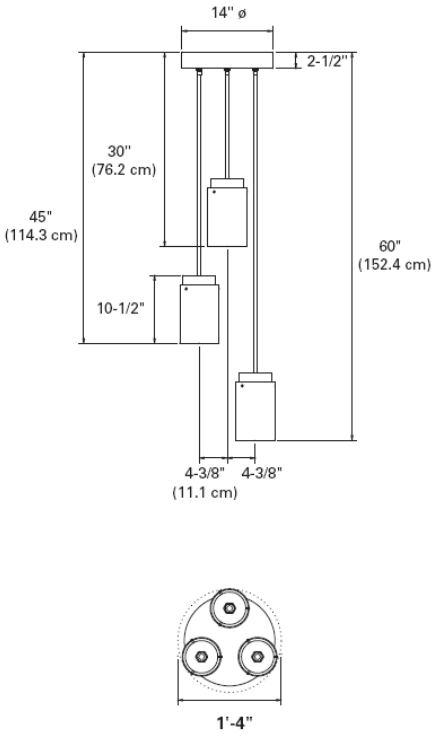

461 TRIPLE CLUSTER (3CL)

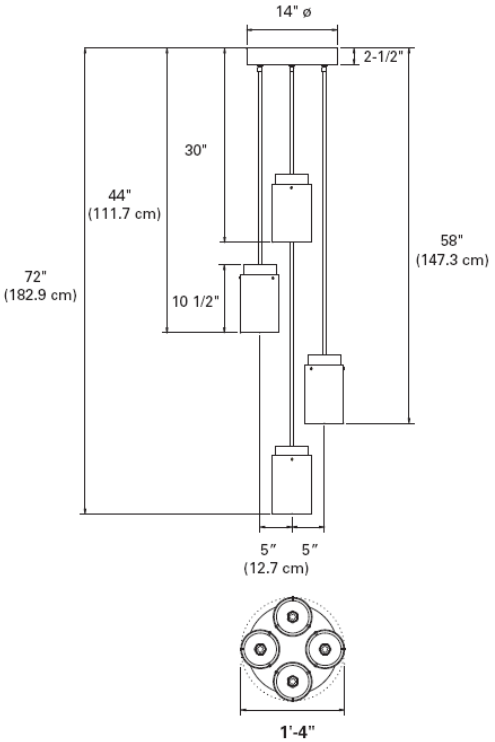

461 FOUR CLUSTER (4CL)

project: Peoria Childrens Museum project #: 13.500.10 prepared for: Jack Rouse Associates prepared by: abernathy lighting design Issue Date: 1-6-2014 Rev. Date:	type **PH** page 3 of 4

STANDARD OPTIONS

461 LUMINOUS BAND (LUB)

461-A ONLY PERF BAND (PFB)

461-A TWO TRIM BANDS - STEM ONLY (2BD)

461-A TWO TRIM BARS (2TB)

COMPANION PRODUCTS

260-A

260

422

461

622

project: Peoria Childrens Museum project #: 13.500.10 prepared for: Jack Rouse Associates prepared by: abernathy lighting design Issue Date: 1-6-2014 Rev. Date:	type **PH** page 4 of 4

Pipe Line Pendant P52608

Design modifications are always welcome.

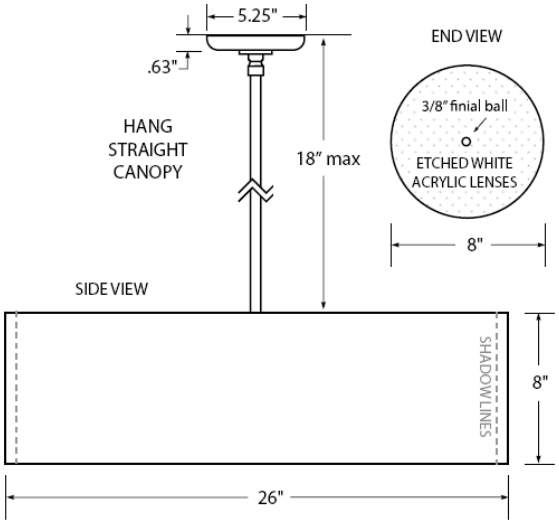

- Welded steel
- LUMENATE® washable diffuser
- 18" (max) stem to match frame
- Canopy finished to match frame
- Mounts to standard J-box
- Suitable for damp locations

weight: 3 lbs

C UL US LISTED

MADE IN USA

P52608 – ☐ – ☐ – ☐ – ☐ – ☐

☐
☐

FINISH

Frame & Canopy
Powder Coat Group B,D
Plated Finish Group A,C
See website or catalog
for choices.

DIFFUSER

Any **LUMENATE®**
See web or catalog
for over 90 choices.

LAMPING *(not included)*

1/14W T5
2/14W T5

VOLTAGE

120V
277V
347V

☐
☐
☐

+ OPTIONS

SUSPENSION OPTIONS

STM - Stem Length *

**Specify length & color*

CANOPY OPTIONS

CAC - Canopy Alternative Color
CF5 - Flair Canopy 5" Dia
CF105 - Flair Canopy 10.5" Dia
CSF5 - Swivel Stem on CF5
CSF105 - Swivel Stem on CF105
CR432 - Cluster Canopy* 4.5" x 42"
CR860 - Cluster Canopy* 8" x 60"
CC105 - Cluster Canopy* 10.5" Dia
CC240 - Cluster Canopy* 24" Dia
C66 - Square Canopy 6"
C1010 - Square Canopy 10"
** Specify arrangement and heights.*

LENS OPTIONS

LBA2 - Side Lenses Acrylic
w/ applied LUMENATE®

BALLAST OPTIONS

BDLI - Dimming Ballast
Lutron Internal
BDAI - Dimming Ballast
Advance Mark 7 Internal

BER - Emergency Ballast
Remote

Catalogue #: P52608-F11-D61-1/14W T5-120-STM-XX-CF5-LBA2

Lamp: Osram/Sylvania-FP14/830/ECO

finish to be White

Project Name

Specifier Name & Location

Notes

Lumetta®

Lumetta Inc., 33 Minnesota Ave., Warwick, RI 02888 t 401-691-3994

This design is the intellectual property of Lumetta, Inc. All rights reserved. Specifications are subject to change without notice.

project: Peoria Childrens Museum project #: 13.500.10 prepared for: Jack Rouse Associates prepared by: abernathy lighting design Issue Date: 1-6-2014 Rev. Date:	type **PJ** page 1 of 1

Incandescent **Deco** **Pendants**

Type _____
-16
P5121 ☐

Catalog No.	Finish Satin Aluminum	Lamping	Dimensions (Inches) A	B	C
P5121	-16	1 (m) 150w	14-3/8	12-1/4	48

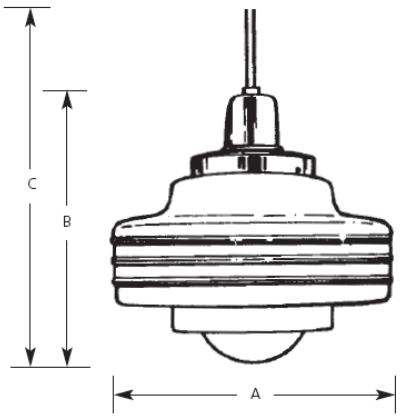

Specifications:

General
- Hand blown glass shade: 13-5/8" dia. x 9-3/4" ht., 5-3/4" OD hole
- Satin white on clear glass
- Satin aluminum finish
- Aluminum construction

Mounting
- Cord hung ceiling
- 4 feet of white cord
- 15 foot cord accessory available (P8625-30) for higher ceilings.
- Covers outlet box
- Mounting strap for outlet box included
- Matching aluminum canopy is 5-1/4" diameter
- Thumbscrews retain glass

Electrical
- Medium based phenolic socket
- Pre-wired

Labeling
- UL-CUL listed

Catalogue #: P5121-16

Lamp: Osram/Sylvania LED20A21/DIM/0/827

Progress Lighting
701 Millennium Blvd.
Greenville, South Carolina
29607

www.progresslighting.com

Rev. 7/09

project: Peoria Childrens Museum project #: 13.500.10 prepared for: Jack Rouse Associates prepared by: abernathy lighting design Issue Date: 1-6-2014 Rev. Date:	type **PK** page 1 of 3

www.sylvania.com/ledr

ULTRA LED A-line Lamps
Omnidirectional

Rated up to 25,000 hours at 70% lumen maintenance, SYLVANIA ULTRA LED A-line omnidirectional lamps offer years of service and reduce energy and maintenance costs. SYLVANIA ULTRA LED lamps are environmentally preferred products. They are RoHS compliant and contain no mercury, lead or other hazardous materials. They emit no UV or IR radiation. A CRI of 80 ensures good color definition and with warm white 2700K CCT, these lamps can be used in many applications in both homes and businesses.

Key Features & Benefits

- Dimmable down to 10%*
- Long life: up to 25,000 hours (L_{70})
- UV and IR free
- Mercury and lead free
- RoHS compliant
- Available in 2700K color temperature
- Suitable for indoor environments only
- Reduces energy consumption up to 82%
- Last up to 33 times longer than incandescent lamps
- No warm-up time, instant-on with full light output and stable color

* Performance may vary depending on dimmer used in application. Please refer to Dimmer Compatibility List (RETRO-DIM) for a list of compatible dimmers or visit www.SYLVANIA.com/LEDRetrofit

Product Offering

Ordering Abbreviation	Wattage	Color Temperature	Typical Lumens
LED8A19/DIM/O/827	8	2700K	470
LED12A19/DIM//O/827	12	2700K	820
LED14A19/DIM/O/827	14	2700K	1100
LED20A21/DIM/O/827	20	2700K	1600

Application Information

Applications
- Downlights
- Pendant fixtures
- Table lamps
- Wall sconces

Market Segments
- Healthcare
- Hospitality
- Residential
- Retail

Application Notes
1. Operating temperature range between -20°C and +45°C (-4°F and + 113°F)
2. Not for use with emergency light fixtures or exit lights
3. Use in open fixture
4. Suitable for indoor use

This device complies with part 15 of the FCC Rules. Operation is subject to the following two conditions: (1) This device may not cause harmful interference, and (2) this device must accept any interference received, including interference that may cause undesired operation. For FCC Part 15 user information, please see www.sylvania.com/fcc15b.

SEE THE WORLD IN A NEW LIGHT SYLVANIA

RETRO053R8 1-13

project: Peoria Childrens Museum project #: 13.500.10 prepared for: Jack Rouse Associates prepared by: abernathy lighting design Issue Date: 1-6-2014 Rev. Date:	type **PK** page 2 of 3

Specification Data

Catalog #	Type
Project	
Comments	
Prepared by	

Ordering Information

Item Number	Ordering Abbreviation	Wattage (W)	Base Type	Replaces	Input Voltage (V)	Average Rated Life (hrs.)[1]	CCT[3]	Typical Lumens (lm)[2]	CRI[4]	Power Factor	Bulb Finish	ENERGY STAR®
78935	LED8A19/DIM/0/827	8	Medium	40WA19	120	25,000	2700K	470	80	.95	Frosted	Yes
78907	LED12A19/DIM/0/827	12	Medium	60WA19	120	25,000	2700K	820	80	.95	Frosted	Yes
78911	LED14A19/DIM/0/827	14	Medium	75WA19	120	25,000	2700K	1100	80	.98	Frosted	No
78951	LED20A21/DIM/0/827	20	Medium	100WA19	120	25,000	2700K	1600	81	.98	Frosted	No

OSRAM SYLVANIA submits most lamps for ENERGY STAR testing. Early qualification for ENERGY STAR lamps begin at 25,000 hours (L_{70}) regardless that the design of the lamp is manufactured for a greater life expectancy. As the lamps pass ENERGY STAR qualifications, manufacturers are able to increase rated life as dictated by ENERGY STAR guidelines becoming either provisionally qualified or fully qualified. Please visit ENERGYSTAR.gov for more information about testing requirements for ENERGY STAR qualified products.

1. Hours lifetime with 70% (L_{70}) lumen maintenance 2. Thermally stable typical lumens (±10%)
3. Thermally stable typical CCT (±10%) 4. CRI – Color Rendering Index

Ordering Guide

LED	8	A19	/	DIM	/	0	/	827
LED Lamps	Wattage: 8	Lamp Type: A19/A21		Dimmable		Omnidirectional		CRI, CCT: 827: 80+ CRI, 2700K CCT

Lamp Dimensions

	(A) MOL (inches)	(B) Diameter (inches)
LED8A19	4.42	2.44
LED12A19	4.42	2.44
LED14A19	4.42	2.44
LED20A21	5.29	2.99

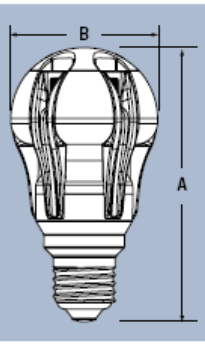

Energy Savings

Basic Product Description	LED Life (hrs.)	LED Lumens	Similar Incandescent	Incandescent Lumens	Incandescent Life (hrs.)	Watts Saved	Energy Savings*	LED Life vs. Incandescent
LED8A19	25,000	470	40W A19	465	1500	32	$ 88.00	>16x
LED12A19	25,000	820	60W A19	850	1000	48	$132.00	25x
LED14A19	25,000	1100	75W A19	1170	750	61	$167.75	>33x
LED20A21	25,000	1600	100W A19	1690	750	80	$220.00	> 33x

*Energy savings over life of lamp calculated at $0.11/kWh

Peerless

Round 4 LED
Direct

Type:

Project:

SPECIFICATIONS Suspended — 4" Round **RD4MS**

DIMENSIONS

☐ **RD4MS**

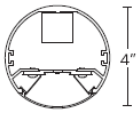

Two LED Lumen Packages:

Specify by Lamp Wattage	W20	W40
Indirect	Low	High
Total Delivered Lumens*	1550	3000
Total Watts*	20	40

* nominal per 4'

SPECIFICATIONS

Construction
Extruded aluminum housing has diameter of 4". Die-cast aluminum end caps mechanically attach with no exposed fasteners.

Source
Two LED lumen packages (High and Low). Three available color temperature options (3000K, 3500K and 4000K).

Optics
Optical system consists of injection-molded primary optics, co-extruded acrylic lenses and metal reflectors. Lenses connect end to end to form a continuous line of light.

Dimming
Dimming down to black standard with eldoLED driver.

Finish
Standard finish for housing and end caps is painted aluminum or gloss white. Consult factory for custom colors.

Controls
Optional nLight-embedded controls allow for constant lumen management (N80) and facilitate simple "plug-and-play" networking and control via CAT-5e cable.

Electrical
LED light engine consists of modular LED boards and 0-10V dimming driver rated 50,000 hours (L_{80}) at 25° C ambient temperature. Driver input wattage is 20W for 1550 delivered-lumen package and 40W for 3000 delivered-lumen package per 4' section.

Specify 120V or 277V. Pre-wired with 16AWG fixture wire. For special circuiting or wire gauge, consult factory. Plug-in electrical connectors included.

Environment
Damp location label option. Ambient operating temperature 0° C to 25° C.

Fixture Length
4' and 8' lengths in a single section for exact suspension spacing of 4' and 8'. For total luminaire length, add 3" for each end cap. Using internal joiners, 4' and 8' sections can be joined to form longer rows.

Validation
CSA/CUS listed. FCC part 15 certified. LM-79 tested. Lighting Facts partner.

Warranty
Five-year limited warranty coverage includes luminaire construction, LED light engine, driver and nLight control device. Terms and conditions apply.

Packaging
100% post-consumer recycled cardboard box. Biodegradable foam inserts and protective luminaire bag. Recycled kraft paper tape.

CATALOG NUMBER

Example: RD4MS W20 40FT R8 120 EZB SCT LP835 F1/24 C110 PDT2

Fixture
- RD4MS

Lamp Wattage
- W20 1550 nominal delivered-lumens
- W40 3000 nominal delivered-lumens

Fixture Row Length
- X FT (4' increments)

Maximum Section Length
- R4 4' section(s)
- R8 8' section(s)

Voltage
- 120
- 277

Driver Type
- EZB eldoLED dims to black

# of Emergency Modules
- (Blank) None
- 1SE 1 section
- 2SE 2 sections
- XSE X sections

Emergency Type[1]
- (Blank) None
- EC Emergency circuit

Switching
- SCT Single circuit

LED Color Temperature
- LP830 3000K 80+ CRI
- LP835 3500K 80+ CRI
- LP840 4000K 80+ CRI

Mounting Type /
- F1/ T-bar ceiling (universal mounting bracket)
- F1A/ T-bar ceiling (UMB with integrated J-box)
- F2/ Hard ceiling (horizontal J-box)

Overall Suspension[2]
- 24 24"
- 36 36"
- 48 48"
- 72 72"
- XX XX"

Overall suspension is measured from ceiling to bottom of fixture

Finish
- C032 White white (high gloss)
- C110 Painted aluminum
- C099 Custom finish

Options
- BLK[3] Black cord, cord manager and canopy
- CP Chicago plenum (available with F1A only)
- DL Damp location label
- ELH[4] Emergency through wiring w/separate feed
- GLR Fusing (fast blow)
- GMF Fusing (slow blow)
- LM 80% lumen management without networking
- MCS Matching feed canopy at support
- N80 nLight nIO with 80% lumen management per row/zone
- N100 nLight nIO without lumen management per row/zone
- OJB Offset junction box
- SLP Sloped ceiling adapter (for 10-45°; must be specified along with F2 and OJB options)
- XXXX Integrated sensor; choose options and obtain code on page 2

Notes:
1. Emergency type is installed in last 4' of luminaire sections. Separate feed required
2. Adjustable cable gripper comes standard
3. Not available with N80 and N100
4. No dimming control on emergency feed

2246 5th Street, Berkeley, CA 94710 • Tel: 510.845.2760 • Fax: 510.845.2776 • Email: techsupport@peerlesslighting.com • PeerlessLighting.com

AcuityBrands © 2013 Acuity Brands Lighting, Inc. All Rights Reserved. "Peerless" is a registered trademark of Acuity Brands Lighting. Products in this document may be covered by one or more U.S. Patents and Patents Pending. Specifications subject to change without notice. 1-year limited warranty. Complete warranty terms located at www.acuitybrands.com/customerresources/terms_and_conditions.aspx

project: Peoria Childrens Museum project #: 13.500.10 prepared for: Jack Rouse Associates prepared by: abernathy lighting design Issue Date: 1-6-2014 Rev. Date:	type **PL** page 1 of 2

Peerless

Round 4 LED
Direct

Type:

Project:

Suspended — 4" Round RD4MS

INTEGRATED NLIGHT MICRO SENSOR

Determine the appropriate sensor type, network type and sensor power source for your application. Enter the code in the Options section of the Catalog Number.

EXAMPLE: **PDT1**

Sensor Type (choose one)	
ADC nLight model nES ADCX	**Daylight Dimming** Specify 0-10V dimming ballast No occupancy sensing
PDT nLight model nES PDT7 ADCX	**Daylight Dimming and/or Occupancy Detection** Specify 0-10v dimming ballast for daylight dimming Specify fixed-output ballast for occupancy detection only (daylight dimming disabled)

Network Type & Sensor Power Source (choose one)	
1*	**nLight-Enabled (Network-Ready) with Luminaire-Integrated Power Pack** 10' Cat-5e cable and splitter provided
2	**Standalone Operation (No Networking) with Luminaire Integrated Power Pack** No Cat-5e cable provided
3*	**nLight-Enabled (Network-Ready) with Remote nLight Power Pack or nPanel** 10' Cat-5e cable and splitter provided Order required remote nLight Power Pack or nPanel separately through nLight (Acuity Brands Controls)

For more information about the Integrated nLight Micro Sensor, its capabilities and options, download the PDF guide at: *PeerlessLighting.com/nLight-Sensor-Guide*
*nLight-Enabled (network-ready) options include one RJ-45 connector on the luminaire, 10 feet of Cat-5e cable to control the entire luminaire row (depending on wattage/voltage limitations), and splitter. The Cat-5e cable drop is located in the same section as the sensor. For multiple zones, please contact techsupport@peerlesslighting.com.

WEIGHTS & SUPPORT SPACING

Suspension spacing equals section length.

STANDARD SECTIONS

18 LBS

34 LBS

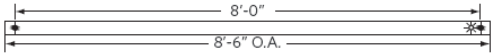

PLAN VIEW

Key:
● Support or feed location
✳ Sensor

CONFIGURATIONS

Round 4 can be configured with special mitered sections to provide seamless corner illumination where two luminaires join together. Reference *Pattern Connector Guide* for additional details.

PHOTOMETRICS

Actual performance may differ as a result of end-user environment and application.

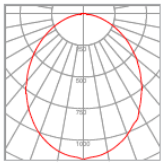

W40 LP835
78 lumens per watt
3207 delivered lumens

100% down

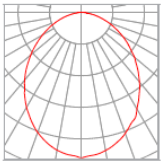

W20 LP835
84 lumens per watt
1689 delivered lumens

100% down

Catalogue #: RD4MS-W40-8'-R8-120-EZB-SCT-LP830-F2/36-C032-SLP

Lamp: LED by Manufacturer

2246 5th Street, Berkeley, CA 94710 • Tel: 510.845.2760 • Fax: 510.845.2776 • Email: techsupport@peerlesslighting.com • PeerlessLighting.com

AcuityBrands © 2013 Acuity Brands Lighting, Inc. All Rights Reserved. "Peerless" and "Peerless Bruno" are registered trademarks of Acuity Brands Lighting.
Products in this document may be covered by one or more U.S. Patents and Patents Pending. Specifications subject to change without notice.
1-year limited warranty. Complete warranty terms located at www.acuitybrands.com/customerresources/terms_and_conditions.aspx

project: Peoria Childrens Museum project #: 13.500.10 prepared for: Jack Rouse Associates prepared by: abernathy lighting design Issue Date: 1-6-2014 Rev. Date:	type **PL** page 2 of 2

Specification Decorative Pendalyte **40471U**

9" Pendant

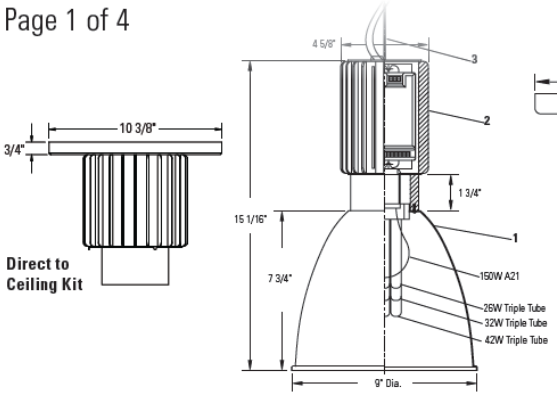

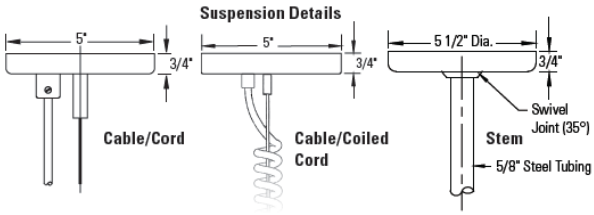

9" Power Head Options (add Suffix to Cat. No.)

MX1 = Mark X Dimming 26/32/42W, 120V only*
MX2 = Mark X Dimming 26/32/42W, 277V only*
E3 = 347V (Canada)
DA = DALI (Digital Addressable lighting Interface)**

* 2-wire, neutral connection required at dimming control.
** 5-wire Suspension Kit required.

Complete Unit Consists of: Power Head, Reflector & Suspension (order each separately)
Power Head Finish: Powder Coated Textured Dark Grey or Titanium

Cat. No.	Color	Lamp	Watts	Volts	Options
4046151	Grey	Incandescent A21	150	120	Not App.
4046151TM	Titanium	Incandescent A21	150	120	Not App.
40471U3	Grey	CFL Triple Tube	26/32/42	120/277	MX1, MX2, DA, E3
40471U3TM	Titanium	CFL Triple Tube	26/32/42	120/277	MX1, MX2, DA, E3
40471T39EU	Gray	CMH T6 G12 Base	39	120/277	N/A
40471T39EUTM	Titanium	CMH T6 G12 Base	39	120/277	N/A

Note: for CFL unit with integrated Emergency Battery Pack (EM) Option refer to Spec Sheet number P-EM for Cat. No. ordering guide and specification data

Remove U or U3 from Cat. No. and add Suffix

Reflector/Glass Shade

Cat. No.	Description
40411	Semi Specular Anodized Reflector
40413	Satin & Anodized Reflector
409WH	White Glass Shade
409BL	Cobalt Blue Glass Shade
409AB	Amber Glass Shade

Suspension

Cat. No.	Color	Description
404SKG	Grey	Cable/Straight Cord 120" Length
404SKB	Black	Cable/Straight Cord 120" Length
404S36	Grey	36" Length 5/8" Stem
404S36B	Black	36" Length 5/8" Stem
404S60	Grey	60" Length 5/8" Stem
404S60B	Black	60" Length 5/8" Stem
404S120	Grey	120" Length 5/8" Stem
4912CTCGR	Grey	Direct to Ceiling Kit, Std. 9" Pendalyte
4912CTCTM	Titanium	Direct to Ceiling Kit, Std. 9" Pendalyte

Optional Extension Kits

Cat. No.	Color	Description
404EXT300*	Grey	25' Straight Cable/Cord Extension Kit
404EXTB*	Black	25' Straight Cable/Cord Extension Kit
404SG5**	Grey	120" 5-wire Straight Cord
404SB5**	Black	120" 5-wire Straight Cord
404EXT300G5**	Grey	5-wire, 25' Cord/Cable
404EXT300B5**	Black	5-wire, 25' Cord/Cable

* Use with Standard Cord or Deco Suspension Kits
** DALI requires a 5-wire Suspension

Features

1. **Reflector:** 16 gauge high purity anodized aluminum or pressed colored glass with inner white frit.
2. **Power Head Housing:** Two-piece extruded aluminum. Removable door allows for ease of installation and servicing. Dark Grey or Titanium baked enamel powder coat finish .
3. **Suspension:** Cable/Cord: 1/16" Stainless Steel/SJT 18-3, Grey or Black. Cable/Coiled Cord: 1/16" Stainless Steel/SJT 18-3, Grey or Black. Stem: 5/8" Steel Tubing and Canopy, with 35° swivel hanger, Grey or Black finish.

Lamping (by others)

Incandescent: 150W max. A-21

Compact Fluorescent:

General Electric	Osram/Sylvania	Philips
(1) 26W Triple Tube 4-Pin (Amalgam) Compact Fluorescent Lamp		
F26TBX/*/A/4P	CF26DT/E/IN/*	PL-T26W/*/4P
(1) 32W Triple Tube 4-Pin (Amalgam) Compact Fluorescent Lamp		
F32TBX/*/A/4P	CF32DT/E/IN/*	PL-T32W/*/4P
-(1) 42W Triple Tube 4-Pin (Amalgam) Compact Fluorescent Lamp		
F42TBX/*/A/4P	CF42DT/E/IN/*	PL-T42W/*/4P

*Manufacturers color temperature designation

Electrical

Lampholders: Incandescent: Medium Base, Porcelain, Nickel Plated Screw-Shell Compact Fluorescent: 4-Pin, 26/32 watt base: GX24q-3; 42 watt base: GX24q-4

Electrical (continued)

Ballasts: Fluorescent: Electronic

	26 Watt		32 Watt		42 Watt	
Voltage	120	277	120	277	120	277
Total Input Watts	-26	-26	-36	-36	-47	-47
Max. Line Current (Amps)	.22	.09	.30	.09	.39	.17

Power Factor > 0.98, Ballast Factor 0.98, THD < 10%,
Minimum Starting Temperature 0°F

Labels

cULus Listed. Suitable for Damp Locations.

Job Information **Type:**

Job Name:

Cat. No.:

Lamp(s):

Notes:

Catalogue #: 40471U3TM-409WH-404SKG

Lamp: CF26DT/E/IN/830/ECO

631 Airport Road, Fall River, MA 02720 • (508) 679-8131 • Fax (508) 674-4710
We reserve the right to change details of design, materials and finish.
www.lightolier.com © 2010 Philips Group • F0610

PHILIPS LIGHTOLIER®

project: Peoria Childrens Museum project #: 13.500.10 prepared for: Jack Rouse Associates prepared by: abernathy lighting design Issue Date: 1-6-2014 Rev. Date:	type **PM** page 1 of 1

FERGUSON
Bath, Kitchen & Lighting Gallery

CRAFTMADE

Item:	CZ1117
Finish:	Burnished Copper
Online Availability:	Available for immediate shipment
Local Showroom Availability:	Differs by location Find Your Local Showroom
Select Finish:	Burnished Copper:

Details and Dimensions

Height	15-3/4"
Width	9"
Number of Bulbs	1
Bulb Type	Medium
Max. Wattage Per Bulb	100 W
Total Fixture Wattage	100 W
Glass Type	Clear
Voltage	120V
Chain Length	36"
Wire Length	72"

Catalogue #: CZ1117- Brushed Copper Finish

Lamp: TCP-LED5E26B1127KF

project: Peoria Childrens Museum project #: 13.500.10 prepared for: Jack Rouse Associates prepared by: abernathy lighting design Issue Date: 1-6-2014 Rev. Date:	type **PP** page 1 of 2

TCP PRO — LED Dimmable Decorative Series

LED	25,000 Hours average rated life, 120Volts

Catalog Number	
Notes	Type

Applications:

Ideal for decorative dimming applications. Suitable for outdoor fixtures.
Also perfect for applications with hard to reach areas, vibration, and frequent starts.

Accent and decorative lighting including:

- Chandeliers
- Ceiling Fans
- Decorative
- Indoor Fixtures
- Outdoor Fixtures

Light output equivalent to 25W.

Features and Benefits

- Long Life: 25,000 hours – no more bulb replacements!
- Fully dimmable, brilliant LED light.
- Excellent white color consistency from bulb to bulb
- UL approved for dry and damp locations.
- Available in E12 and E26 base.

** Three or more lamps per dimming circuit is recommended fo optimal dimming.*

Specifications (at full brightness)

Input Line Voltage:	120VAC
Input Line Frequency	60HZ
Lamp Life (Rated)	25,000 hrs
Minimum Starting Temp	-30°C
Maximum Operating Temp	40°C
UL/cUL Listed	Yes
Power Factor	92%
CRI	82

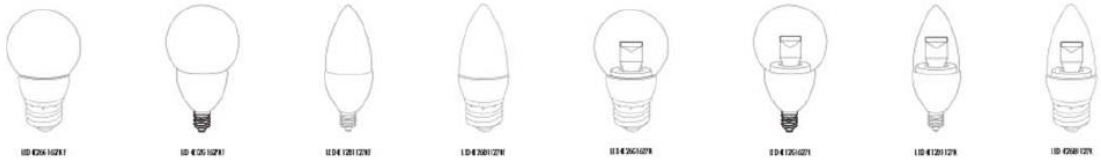

Warranties and Certifications:		Item #	Description	Voltage	Wattage	Wattage Equivalent	M.O.L. (inches)	Diameter (inches)	Lumens	LPW	CCT	CRI
3 YEAR WARRANTY	5W	LED5E12B1127K	LED 5W DIMMABLE CANDELABRA BLUNT TIP - 2700K	120	5.0	40W	3.8	1.4	300	60	2700K	82
		LED5E26B1127K	LED 5W DIMMABLE BLUNT TIP - 2700K	120	5.0	40W	3.8	1.4	300	60	2700K	82
		LED5E12B1127KF	LED 5W DIMMABLE CANDELABRA FROSTED BLUNT TIP - 2700K	120	5.0	40W	3.8	1.4	300	60	2700K	82
		LED5E26B1127KF	LED 5W DIMMABLE FROSTED BLUNT TIP - 2700K	120	5.0	40W	3.8	1.4	300	60	2700K	82
		LED5E12G1627K	LED 5W DIMMABLE CANDELABRA G16 GLOBE - 2700K	120	5.0	40W	3.5	2.0	300	60	2700K	82
		LED5E26G1627K	LED 5W DIMMABLE G16 GLOBE - 2700K	120	5.0	40W	3.5	2.0	300	60	2700K	82
		LED5E12G1627K	LED 5W DIMMABLE CANDELABRA FROSTED G16 GLOBE - 2700K	120	5.0	40W	3.5	2.0	300	60	2700K	82
		LED5E26G1627K	LED 5W DIMMABLE FROSTED G16 GLOBE - 2700K	120	5.0	40W	3.5	2.0	300	60	2700K	82
	4W	LED4E12B1127K	LED 4W DIMMABLE CANDELABRA BLUNT TIP - 2700K	120	3.7	25W	3.8	1.4	200	50	2700K	82
		LED4E26B1127K	LED 4W DIMMABLE BLUNT TIP - 2700K	120	3.7	25W	3.8	1.4	200	50	2700K	82
		LED4E12B1127KF	LED 4W DIMMABLE CANDELABRA FROSTED BLUNT TIP - 2700K	120	3.7	25W	3.8	1.4	200	50	2700K	82
		LED4E26B1127KF	LED 4W DIMMABLE FROSTED BLUNT TIP - 2700K	120	3.7	25W	3.8	1.4	200	50	2700K	82
		LED4E12G1627K	LED 4W DIMMABLE CANDELABRA G16 GLOBE - 2700K	120	3.7	25W	3.5	2.0	200	50	2700K	82
		LED4E26G1627K	LED 4W DIMMABLE G16 GLOBE - 2700K	120	3.7	25W	3.5	2.0	200	50	2700K	82
		LED4E12G1627K	LED 4W DIMMABLE CANDELABRA FROSTED G16 GLOBE - 2700K	120	3.7	25W	3.5	2.0	200	50	2700K	82
		LED4E26G1627K	LED 4W DIMMABLE FROSTED G16 GLOBE - 2700K	120	3.7	25W	3.5	2.0	200	50	2700K	82

TCP, Inc.
325 Campus Dr. | Aurora, Ohio 44202 | P: 1-800-324-1496 | F: 330-995-6188 | tcpi.com

© TCP, Inc. JAN 2013/49558

CELEBRATING 20 YEARS OF ENERGY STAR

project: Peoria Childrens Museum project #: 13.500.10 prepared for: Jack Rouse Associates prepared by: abernathy lighting design Issue Date: 1-6-2014 Rev. Date:	type **PP**

APPLICATION

Suspended incandescent and compact fluorescent downlights for general illumination in low to medium ceiling applications such as offices, malls and retail spaces. The acrylic refractor is particularly suited for low bay applications where low apparent brightness and high vertical footcandles are desired. Light colored ceilings utilize its inherent uplight component, reducing contrast and improving uniformity.

PRODUCT DATA

REFRACTOR: The prismatic UV stabilized acrylic refractor produces a soft diffused illumination with 20% uplight. Contact factory for optional colors and finishes.

LENS: Optional lenses are available to enclose the fixture, secured with metal clamp band. DL12 is a 12" diameter domed clear acrylic lens. PL12 is a 12" diameter conical prismatic acrylic lens. CL12 is a 12" diameter clear flat acrylic lens.

MECHANICAL: The cylindrical housing is constructed of satin anodized aluminum extrusions, finned for optimum heat dissipation.

LAMP DATA / SOCKETS:

INCANDESCENT –
Single lamp operation.
Medium base porcelain socket with nickel plated screw shell.

LAMP DATA

LAMP	WATTS	BASE	LUMENS
100W A-19 I.F.	100	MED	1650
150W A-21 I.F.	150	MED	2850
200W A-23 I.F.	200	MED	4010

COMPACT FLUORESCENT –
Single or double lamp operation.
Positive latch 4-Pin thermoplastic socket(s).

LAMP DATA

LAMP	WATTS	BASE	BALLAST	LUMENS
Triple Tube 4-Pin	26	GX24q-3	Elec.	1800
	32	GX24q-3	Elec.	2400
	42	GX24q-4	Elec.	3200

ELECTRICAL: Supplied standard with white three wire cord or coiled cord, specify when ordering.

INCANDESCENT – 120 volt / 200 watt maximum.

FLUORESCENT – *Programmed* start, High Power Factor Electronic Ballast 120 volt to 277 volt, 50 to 60Hz, input. Total harmonic distortion (THD) under 10%. Consult technical section of catalog for additional information.

MOUNTING: Supplied standard with matte white ceiling canopy and ten (10) feet of aviation cable. Mounting height is field adjustable without the use of tools. Optional mounting with pendant or power hook. Pendant Kit specified separately.

EXAMPLE: PK 24 SA

Swivel Pendant Kit
Stem Length in inches (add 1.5" for canopy)
Satin Aluminum (SA), White Finish (W), Black (B), or Bronze (Z)

Manufactured and tested to UL#1598 and CSA standards.
Note: Suitable for damp location.

Intertek
For Damp Location

Coventry
Architectural Series

SERIES P12C Pendant
Incandescent & Fluorescent Pendant Downlight w/Acrylic Refractor

Solerio Decorative Lighting

Domed Clear Acrylic Lens

Conical Prismatic Drop Lens

Aviation Cable & Coiled Cord

Aviation Cable & Straight Cord

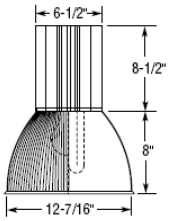

QUICK CALCULATOR FOR MULTIPLE FIXTURES

FIXTURE 32 WATT TRIPLE TUBE LAMP

Spacing on Center	Ht. to 30" Above Floor	Initial Foot-Candles
6'	6' 12'	39 23
8'	6' 12'	22 12
10'	6' 12'	22 19

Footcandle Multipliers 26 watt = .7
42 watt = 1.3 96% efficiency 2.2 SMHR

Catalog #: **P12C**

Example: P12C132TE4C / PL12

Fixture Series	Lamp/Wattage	Ballast / Voltage	Suspension	Options	Lenses
P12C	QTY. TYPE 1, or 2 — 32T Triple 1, or 2 — 42T Triple A21 – 150 watt Incandescent A23 – 200 watt	E4 – Electronic 120/277 DIMMING BALLASTS D1 – Lutron 120V D2 – Lutron 277V DT – Lutron TU Wire (120V only) DA1 – Advance Mark X 120V DA2 – Advance Mark X 277V DA4 – Advance Mark VII 120-277V (requires 4 wire dimming control) 2 – (277 Volt)	C – Aviation Cable / coiled 10' cord S – Aviation Cable / straight 10' cord *For special length, specify in feet (ie, C16 = 16')* P – Pendant provision *Increases overall ht. 2"* PH – Power Hook *Increases overall ht. 4.5"*	Special Housing Colors W = White B = Black Z = Bronze F = Fused EM = Emergency Power Pack *(Fluorescent Only)*	PL12 – Conical Prismatic Acrylic Lens DL12 – Clear Domed Acrylic Lens CL12 – Clear Flat Acrylic Lens

Catalogue #: P12C-1/42T-E4-S-CL12

Lamp: CF26DT/E/IN/830/ECO

All Pathway® products meet or exceed requirements as established by the National Electrical Code. Specifications subject to change without notice.

Series P12C Pendant - Incandescent & Fluorescent Pendant Downlight w/Acrylic Refractor

PATHWAY the Lighting Source
Pathway Lighting Products, Inc., P.O. Box 591, Old Saybrook, CT 06475-0591
voice 800.342.0592 • fax 800.207.0090 • www.pathwaylighting.com • e-mail: sales@pathwaylighting.com

SF41.0
UUUDUB

project: Peoria Childrens Museum project #: 13.500.10 prepared for: Jack Rouse Associates prepared by: abernathy lighting design Issue Date: 1-6-2014 Rev. Date: 1-23-2014	type **PQ**

DL8ZP [LEDX]

DL8ZP [LEDX]

RECESSED LED DOWNLIGHT (IC, NON-IC, REMODEL)
ROUND ADJUSTABLE

TRIM

A LED
Remote phosphor dimmable LED module in aluminum and glass casing

B Special Features
Die-cast Professional Baffle minimizes aperture glare; two axes of adjustment; 42° tilt in ceilings up to 5/8" (16mm) thick; 27° tilt in ceilings up to 1" (25mm) thick; 357° rotation; manually adjustable and lockable from below

C Effects Devices
Soft focus lens included; adjustable yoke allows secure placement of up to 2 effects devices

D Trim Plate
Thickness measures 0.055"; install as zero-sightline or flange overlay

E Retention
Torsion spring clips designed to bear 3 times fixture weight; accommodates varying ceiling thicknesses and ensure snug fit of trim against ceiling

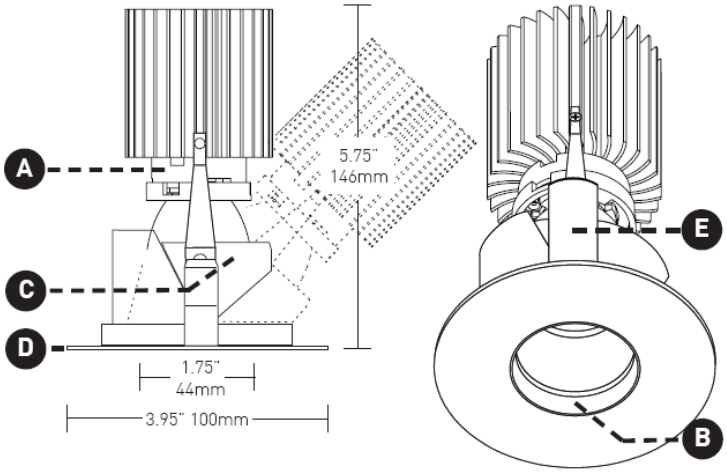

TECHNICAL

CONSTRUCTION

Trim: Steel and aluminum; painted finishes are granulated powdercoat; heat-sink is extruded aluminum

LED

Xicato LED module available in configurations of 80+ CRI: 720, 1000 and 1300 lumen packages, and 95+ CRI: 580, 800 and 1000 lumen packages. Available color temperatures are 2700K (+/- 40K), 3000K (+/- 50K), 3500K (+/- 60K) and 4000K (+/- 70K), with beam angles of 40° and 60°. Average rated lamp life of 50,000 hours. LED/ heat-sink module field replaceable.

DIMMING PROTOCOL

Analog 0-10 and Triac dim to nominal 10% lm output; Lutron system dims to nominal 1% lm output. Consult factory with questions about particular dimming systems.

LISTING

ETL / C-ETL listed for dry/damp locations

WARRANTY

Five year warranty on LED lamp module and driver. One year warranty on all other Lucifer Lighting provided system components. Consult factory for full warranty guidelines.

Catalogue #: DL8ZP-RM-W-X-8007-2 + PS-LEDX-RM-8007-UNIVND

Lamp: LED by Manufacturer

LED SPEC LOCKERS

Color Consistency	1x2 SDCM
Phosphor Architecture	Remote Phosphor
Standard Series 80+ CRI	R9=16, R13= 81 ,R15=75
Artist Series 95+ CRI	R9=98, R13=98, R15=98
Module Nominal lm/watt	720lm (70lm/watt); 1000lm (68lm/watt)
Construction	Aluminum & Glass; IP66 (module)
Temperature Limit	40°C
Dimming	All dimming protocols

EMERGENCY LIGHTING

LEDX downlights may be used in conjunction with **remote** emergency battery EMB20-LEDX (specified separately) which is a Philips Bodine inverter.

In cases where normal power is interrupted, the remote inverter is rated to provide minimum 90 minutes of emergency power to the LED lighting system. Upon restoration of normal power, the inverter automatically recharges within 24 hours.

Refer to Philips Bodine model number ELI-S-20 spec sheet for complete details.

LUCIFER LIGHTING COMPANY

[041513]

luciferlighting.com

©2013 Lucifer Lighting Company
As part of its policy of continuous research and product development, the company reserves the right to change or withdraw specifications without prior notice.

3750 IH35 North
San Antonio, Texas 78219
[PH] +1-210-227-7329
[FAX] +1-210-227-4967

project: Peoria Childrens Museum
project #: 13.500.10
prepared for: Jack Rouse Associates
prepared by: abernathy lighting design

Issue Date: 1-6-2014
Rev. Date:

type
RA

DL8ZP [LEDX]

DL8ZP [LEDX]

RECESSED LED DOWNLIGHT (IC, NON-IC, REMODEL)

ROUND ADJUSTABLE

TRIM

NIC TYPE DOWNLIGHT
For use with NIC mounting tray in non-IC installations

A Special Features
Quick-connect conduit plug between fixture and power supply on mounting tray / junction box assembly (example illustration shown); metal conduit protected wiring

Ensure minimum 1/2" (13mm) setback from combustible materials and minimum 3" (76mm) setback from insulation material on all sides of tray and downlight fixture assembly

Do not install in environments where ambient temperatures exceed 40°C

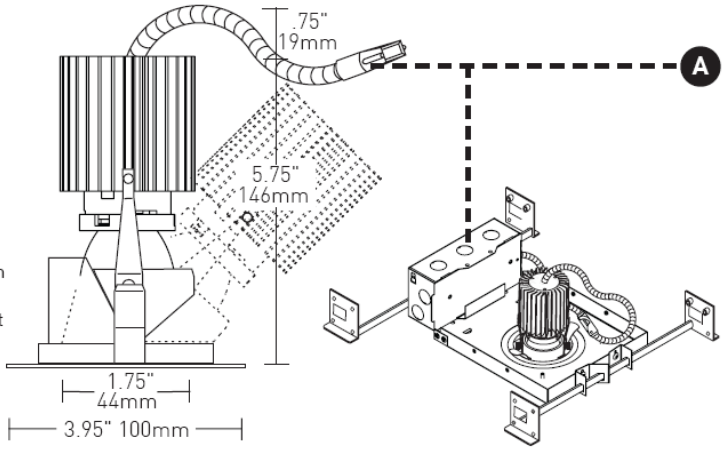

Example downlight shown installed in tray. Actual downlight profile varies by model.

REMODEL TYPE DOWNLIGHT
For use in non-IC remodel installations; ceiling mounted collar must be specified for flange overlay or zero-sightline installations

A Special Features
Tethered junction box with metal conduit protected wiring and quick-connect plug; for mounting without conventional housing

Ensure minimum 2.53" (64mm) setback from combustible materials and minimum 5.03" (128mm) setback from insulation material on all sides

Do not install in environments where ambient temperatures exceed 40°C

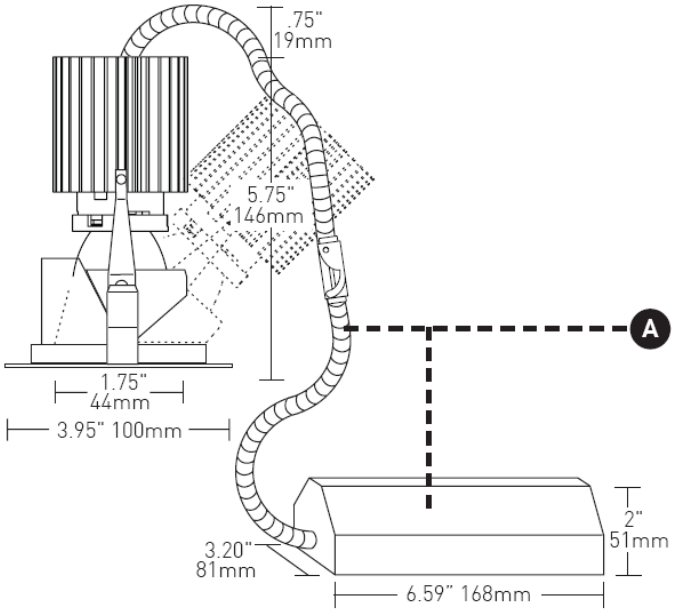

LUCIFER LIGHTING COMPANY

[041513]

lucifer lighting.com

©2013 Lucifer Lighting Company
As part of its policy of continuous research and product development, the company reserves the right to change or withdraw specifications without prior notice.

3750 IH35 North
San Antonio, Texas 78219
[PH] +1-210-227-7329
[FAX] +1-210-227-4967

project: Peoria Childrens Museum
project #: 13.500.10
prepared for: Jack Rouse Associates
prepared by: abernathy lighting design

Issue Date: 1-6-2014
Rev. Date:

type
RA

ORDERING

Downlights may be specified for use in IC/Airtight/CCEA ceilings, non-IC ceilings, and for remodel applications in non-IC ceilings.

IC or **NC** downlight fixture installation type must be specified with matching housing installation type.

RM remodel downlight fixture installation type is specified with matching power supply instead of housing. Ceiling mounted collar or appliqué must also be specified for use with remodel downlight fixture.

Downlight Fixture

Ex: DL8ZP-NC-BRM-1-800730-1

DL8ZP - ☐ - ☐ - ☐ - ☐ ☐ - ☐

FINISH

W	Matte White Powdercoat
B	Matte Black Powdercoat
C	Polished Chrome
IG	Industrial Gray (Bead Blasted SS)
MG	Metallic Gray Powdercoat
SS	Brushed Stainless Steel
ABR	Architectural Bronze Powdercoat
BRP	Polished Oil-Rubbed Bronze Plate
BRM	Matte Oil-Rubbed Bronze Plate

COLOR TEMPERATURE

27	2700K
30	3000K
35	3500K
40	4000K

OPTIC

1	40° Faceted
2	40° Smooth
3	60° Smooth

INSTALLATION TYPE

IC	IC/Airtight/CCEA (Version depends on System Configuration; see page 3)
NC	Non-IC
RM	Remodel; Non-IC

CEILING THICKNESS

ZF OPTIONS

1	5/8"
2	3/4"
3	1"
4	1-1/4"
5	1-1/2"
6	1-3/4"

ZO OPTIONS

1	5/8" to 1"

NOMINAL SYSTEM CONFIGURATION

8013	80+ CRI, 27W / 1300lm
8010	80+ CRI, 18W / 1000lm
8007	80+ CRI, 14W / 720lm
9510	95+ CRI, 25W / 1000lm
9508	95+ CRI, 22W / 800lm
9505	95+ CRI, 18W / 580lm

Housing

Ex: DH-NC-ZF-1-8007-UNIVL3

DH - ☐ - ☐ - ☐ - ☐ - ☐

FIXTURE FLANGE

ZF	Flange Overlay
ZO	Zero-Sightline

POWER SUPPLY

12T	120V Electronic, TRIAC †
UNIVA	120V-277V Electronic, Analog 0-10
12L2	120V Electronic, Lutron 2 Wire Hi-Lume A
UNIVL3	120V-277V Electronic, Lutron 3 Wire Hi-Lume A
UNIVND	120V-277V Electronic, Non-Dimming

† Not available for 9510 or 9505 system configurations

OR

Remodel Power Supply

Ex: PS-LEDX-RM-8007-UNIVL3

PS-LEDX-RM - ☐ - ☐

ORDERING (ACCESSORIES)

ADDITIONAL EFFECTS DEVICES

☐ **AGL-2**	Amber Glass Lens
☐ **CGL-2**	Clear Glass Lens
☐ **FGL-2**	Frosted Glass Lens
☐ **HCL-2**	Honeycomb Louver
☐ **LSL-2**	Linear Spread Lens
☐ **SGL-2**	Spread Lens
☐ **WTL-2**	Warm Tone Lens

EMERGENCY LIGHTING

☐ **EMB20-LEDX**	20W Emergency Battery Backup

For **IC** or **NC** zero-sightline (ZO) installations, select appliqué profile.

DLA-APP-Z-RD - ☐

APPLIQUÉ | PROFILE

3	Recommended
5	Level 5 Ceilings

For remodel **RM** installations, select mounting option.

☐

REMODEL MOUNTING OPTION

EDL-ZF	Flange overlay collar
EDLA-APP-Z-RD	Zero-sightline appliqué

LUCIFER LIGHTING COMPANY

[041513]

luciferlighting.com

©2013 Lucifer Lighting Company
As part of its policy of continuous research and product development, the company reserves the right to change or withdraw specifications without prior notice.

3750 IH35 North
San Antonio, Texas 78219
[PH] +1-210-227-7329
[FAX] +1-210-227-4967

project: Peoria Childrens Museum
project #: 13.500.10
prepared for: Jack Rouse Associates
prepared by: abernathy lighting design

Issue Date: 1-6-2014
Rev. Date:

type

RA

DL61ZP [LEDX]

DL61ZP [LEDX]

RECESSED LED DOWNLIGHT (IC, NON-IC, REMODEL)
ROUND FIXED WIDE-APERTURE

TRIM

A LED
Remote phosphor dimmable LED module in aluminum and glass casing

B Special Features
Die-cast wide aperture; deeply regressed light source; integral Professional Baffle minimizes aperture glare

C Effects Devices
Soft focus lens included; adjustable yoke allows secure placement of up to 2 effects devices

D Trim Plate
Thickness measures 0.055"; install as zero-sightline or flange overlay

E Retention
Torsion spring clips designed to bear 3 times fixture weight; accommodates varying ceiling thicknesses and ensure snug fit of trim against ceiling

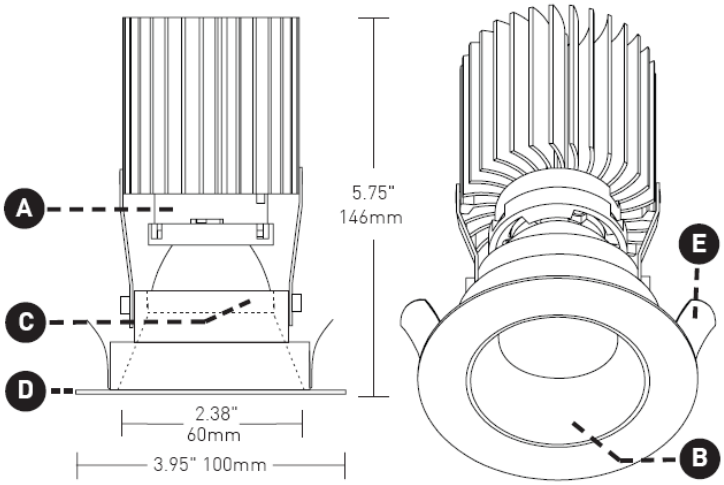

TECHNICAL

CONSTRUCTION
Trim: Steel and aluminum; painted finishes are granulated powdercoat; heat-sink is extruded aluminum

LED
Xicato LED module available in configurations of 80+ CRI: 720, 1000 and 1300 lumen packages, and 95+ CRI: 580, 800 and 1000 lumen packages. Available color temperatures are 2700K (+/- 40K), 3000K (+/- 50K), 3500K (+/- 60K) and 4000K (+/- 70K), with beam angles of 40° and 60°. Average rated lamp life of 50,000 hours. LED/ heat-sink module field replaceable.

DIMMING PROTOCOL
Analog 0-10 and Triac dim to nominal 10% lm output; Lutron system dims to nominal 1% lm output. Consult factory with questions about particular dimming systems.

LISTING
ETL / C-ETL listed for dry/damp locations

WARRANTY
Five year warranty on LED lamp module and driver. One year warranty on all other Lucifer Lighting provided system components. Consult factory for full warranty guidelines.

Catalogue #: DL61ZP-RM-W-X-8007-27-2 + DH-RM-ZF-X-8007-UNIVND

Lamp: LED by Manufacturer

LED SPEC LOCKERS

Color Consistency	1x2 SDCM
Phosphor Architecture	Remote Phosphor
Standard Series 80+ CRI	R9=16, R13= 81 ,R15=75
Artist Series 95+ CRI	R9=98, R13=98, R15=98
Module Nominal lm/watt	720lm (70lm/watt); 1000lm (68lm/watt)
Construction	Aluminum & Glass; IP66 (module)
Temperature Limit	40°C
Dimming	All dimming protocols

EMERGENCY LIGHTING

LEDX downlights may be used in conjunction with **remote** emergency battery EMB20-LEDX (specified separately) which is a Philips Bodine inverter.

In cases where normal power is interrupted, the remote inverter is rated to provide minimum 90 minutes of emergency power to the LED lighting system. Upon restoration of normal power, the inverter automatically recharges within 24 hours.

Refer to Philips Bodine model number ELI-S-20 spec sheet for complete details.

LUCIFER LIGHTING COMPANY

[041513]

luciferlighting.com

©2013 Lucifer Lighting Company
As part of its policy of continuous research and product development, the company reserves the right to change or withdraw specifications without prior notice.

3750 IH35 North
San Antonio, Texas 78219
[PH] +1-210-227-7329
[FAX] +1-210-227-4967

project: Peoria Childrens Museum
project #: 13.500.10
prepared for: Jack Rouse Associates
prepared by: abernathy lighting design

Issue Date: 1-6-2014
Rev. Date:

type
RB

DL61ZP [LEDX]

RECESSED LED DOWNLIGHT (IC, NON-IC, REMODEL)
ROUND FIXED WIDE-APERTURE

TRIM

NIC TYPE DOWNLIGHT
For use with NIC mounting tray in non-IC installations

A Special Features
Quick-connect conduit plug between fixture and power supply on mounting tray / junction box assembly (example illustration shown); metal conduit protected wiring

Ensure minimum 1/2" (13mm) setback from combustible materials and minimum 3" (76mm) setback from insulation material on all sides of tray and downlight fixture assembly

Do not install in environments where ambient temperatures exceed 40°C

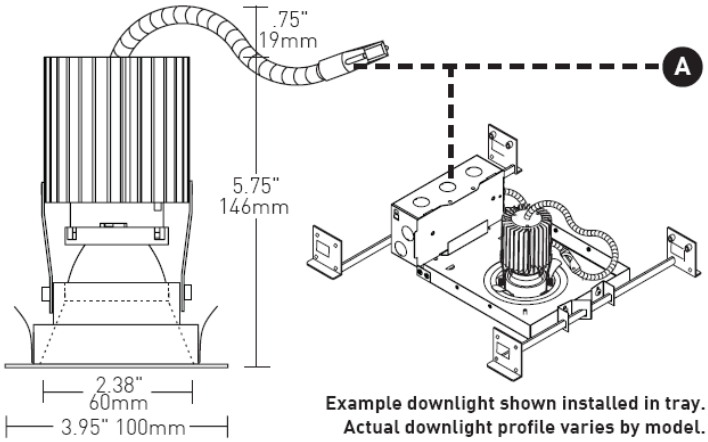

Example downlight shown installed in tray. Actual downlight profile varies by model.

REMODEL TYPE DOWNLIGHT
For use in non-IC remodel installations; ceiling mounted collar must be specified for flange overlay or zero-sightline installations

A Special Features
Tethered junction box with metal conduit protected wiring and quick-connect plug; for mounting without conventional housing

Ensure minimum 2.53" (64mm) setback from combustible materials and minimum 5.03" (128mm) setback from insulation material on all sides

Do not install in environments where ambient temperatures exceed 40°C

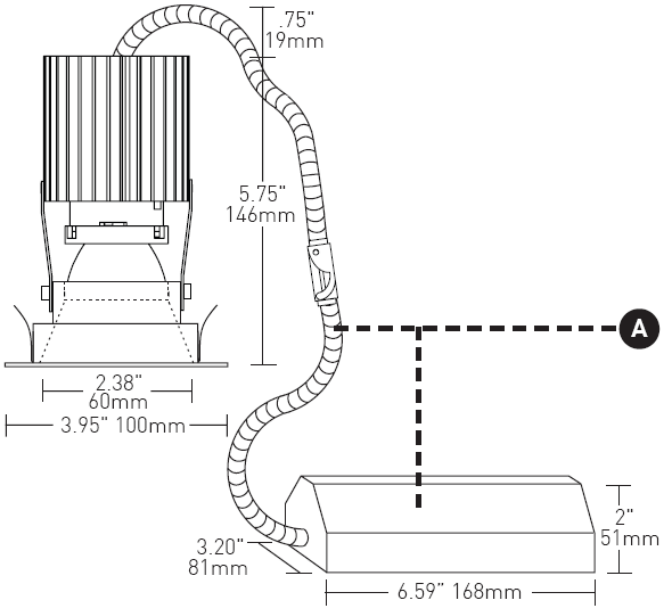

LUCIFER LIGHTING COMPANY
[041513]
luciferlighting.com

©2013 Lucifer Lighting Company
As part of its policy of continuous research and product development, the company reserves the right to change or withdraw specifications without prior notice.

3750 IH35 North
San Antonio, Texas 78219
[PH] +1-210-227-7329
[FAX] +1-210-227-4967

project: Peoria Childrens Museum project #: 13.500.10 prepared for: Jack Rouse Associates prepared by: abernathy lighting design Issue Date: 1-6-2014 Rev. Date:	type **RB** page 2 of 5

NON-IC MOUNTING TRAY

For use with LEDX downlights in non-IC, accessible and non-accessible ceilings. Metal conduit protected wiring and quick-connect conduit plug between fixture and power supply on mounting tray / junction box assembly. Provided hanger bars may be fitted to short or long side of tray and may be cut/narrowed ensuring minimum 1/2" (13mm) setback from combustible materials and minimum 3" (76mm) setback from insulation material on all sides.

Do not install in environments where ambient temperatures exceed 40°C.

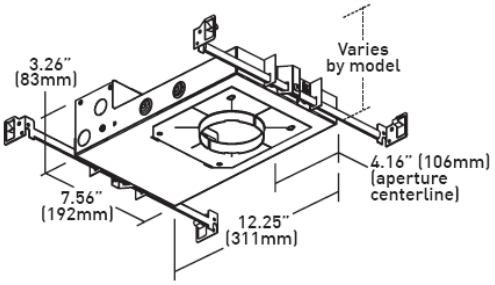

IC HOUSINGS

For use with LEDX downlights in IC, Airtight, CCEA accessible and non-accessible ceilings. Transformer compartment and all splice connections may be serviced from room side. Certified Chicago Plenum and ASTM E283 Airtight. Hanger bars included.

IC housing use depends on system configuration.

Standard Wattage housing is used for 8007 or 9505 configurations.

Intermediate Wattage housing is used for 8010 or 9508 configurations.

Maximum Wattage housing is used for 8013 or 9510 configurations.

Do not install in environments where ambient temperatures exceed 40°C.

STANDARD WATTAGE

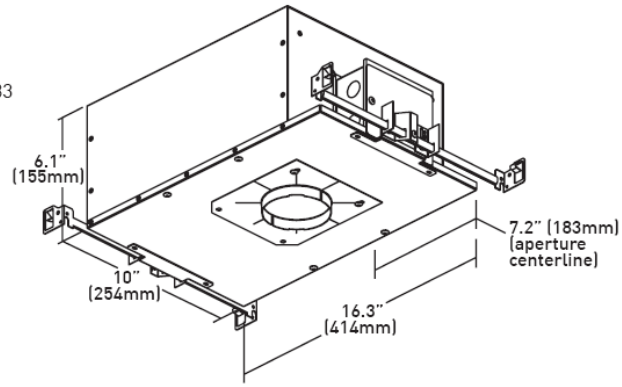

INTERMEDIATE WATTAGE

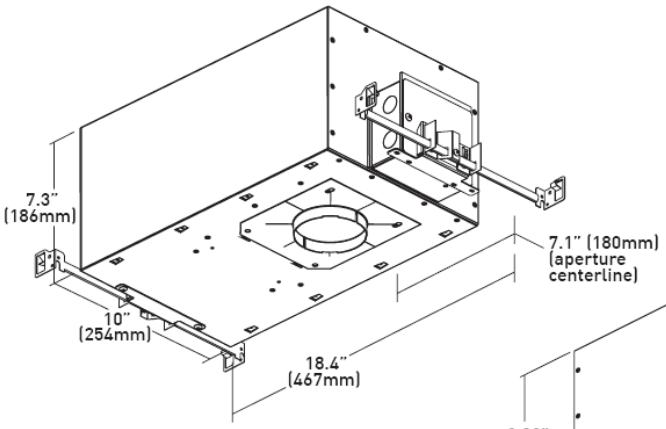

MAXIMUM WATTAGE

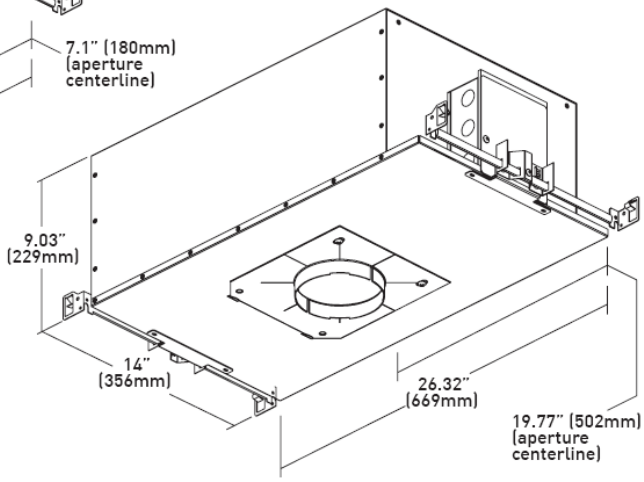

LUCIFER LIGHTING COMPANY

[041513]

luciferlighting.com

©2013 Lucifer Lighting Company
As part of its policy of continuous research and product development, the company reserves the right to change or withdraw specifications without prior notice.

3750 IH35 North
San Antonio, Texas 78219
[PH] +1-210-227-7329
[FAX] +1-210-227-4967

project: Peoria Childrens Museum
project #: 13.500.10
prepared for: Jack Rouse Associates
prepared by: abernathy lighting design

Issue Date: 1-6-2014
Rev. Date:

type
RB

ZERO-SIGHTLINE APPLIQUÉS FOR NC TRAY AND IC HOUSINGS

An appliqué is necessary to complete a Z Series zero-sightline installation. When installed according to manufacturer's installation instructions and when ceiling conditions are met, the fixture is flush with the ceiling plane. Available in standard and reduced profile versions.
All models include a removable plaster plug to ensure flush trim fit after mudding.

DLA-APP-Z-RD-3 is recommended for all applications as it provides maximum structural reinforcement.

DLA-APP-Z-RD-5 has a thinner profile and smaller diameter and is optional for installations where a thinner profile to apply mudding is preferred.

DLA-APP-Z-RD-3

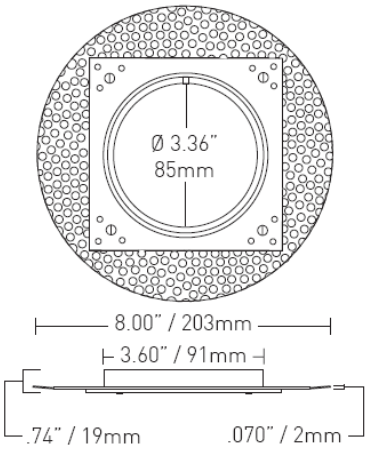

DLA-APP-Z-RD-5

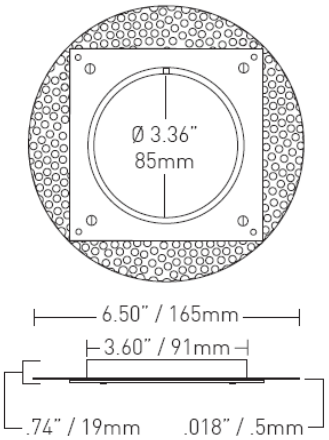

MOUNTING FOR REMODEL DOWNLIGHTS

Remodel downlight installations require ceiling mounted zero-sightline appliqué or flange overlay collar.

Zero-Sightline
When installed according to manufacturer's installation instructions and when ceiling conditions are met, the fixture is flush with the ceiling plane.

Use with EDLA-APP-Z-RD appliqué for zero-sightine flush installations. (5" (127mm) ceiling cutout.) Includes a removable plaster plug to ensure flush trim fit after mudding.

Flange Overlay
Fixture overlays ceiling plane.

Use with EDL-ZF collar. (3.5" (89mm) ceiling cutout; Lucifer Lighting recommends that the edge of the ceiling cutout be beveled to ensure proper fit.)

EDLA-APP-Z-RD

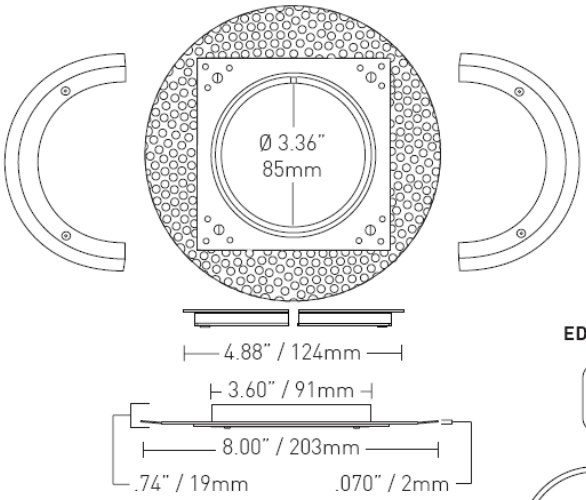

EDL-ZF

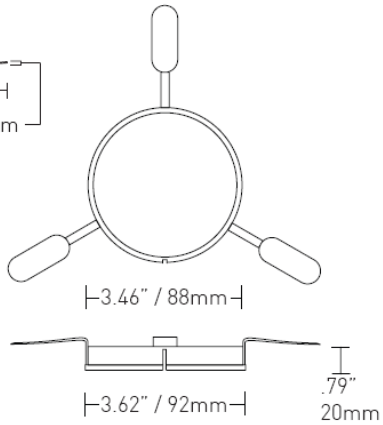

LUCIFER LIGHTING COMPANY
luciferlighting.com

©2013 Lucifer Lighting Company
As part of its policy of continuous research and product development, the company reserves the right to change or withdraw specifications without prior notice.

3750 IH35 North
San Antonio, Texas 78219
[PH] +1-210-227-7329
[FAX] +1-210-227-4967

[041513]

project: Peoria Childrens Museum project #: 13.500.10 prepared for: Jack Rouse Associates prepared by: abernathy lighting design Issue Date: 1-6-2014 Rev. Date:	type **RB** page 4 of 5

ORDERING

Downlights may be specified for use in IC/Airtight/CCEA ceilings, non-IC ceilings, and for remodel applications in non-IC ceilings.

IC or **NC** downlight fixture installation type must be specified with matching housing installation type.

RM remodel downlight fixture installation type is specified with matching power supply instead of housing. Ceiling mounted collar or appliqué must also be specified for use with remodel downlight fixture.

Downlight Fixture

Ex: DL61ZP-NC-BRM-1-800730-1

FINISH

W	Matte White Powdercoat
B	Matte Black Powdercoat
C	Polished Chrome
IG	Industrial Gray (Bead Blasted SS)
MG	Metallic Gray Powdercoat
SS	Brushed Stainless Steel
ABR	Architectural Bronze Powdercoat
BRP	Polished Oil-Rubbed Bronze Plate
BRM	Matte Oil-Rubbed Bronze Plate

COLOR TEMPERATURE

27	2700K
30	3000K
35	3500K
40	4000K

OPTIC

1	40° Faceted
2	40° Smooth
3	60° Smooth

DL61ZP - [ ] - [ ] - [ ] - [ ] [ ] - [ ]

INSTALLATION TYPE

IC	IC/Airtight/CCEA (Version depends on System Configuration; see page 3)
NC	Non-IC
RM	Remodel; Non-IC

CEILING THICKNESS

ZF OPTIONS

1	5/8"
2	3/4"
3	1"
4	1-1/4"
5	1-1/2"
6	1-3/4"

ZO OPTIONS

1	5/8" to 1"

NOMINAL SYSTEM CONFIGURATION

8013	80+ CRI, 27W / 1300lm
8010	80+ CRI, 18W / 1000lm
8007	80+ CRI, 14W / 720lm
9510	95+ CRI, 25W / 1000lm
9508	95+ CRI, 22W / 800lm
9505	95+ CRI, 18W / 580lm

Housing

Ex: DH-NC-ZF-1-8007-UNIVL3

DH - [ ] - [ ] - [ ] - [ ] - [ ]

FIXTURE FLANGE

ZF	Flange Overlay
ZO	Zero-Sightline

POWER SUPPLY

12T	120V Electronic, TRIAC †
UNIVA	120V-277V Electronic, Analog 0-10
12L2	120V Electronic, Lutron 2 Wire Hi-Lume A
UNIVL3	120V-277V Electronic, Lutron 3 Wire Hi-Lume A
UNIVND	120V-277V Electronic, Non-Dimming

† Not available for 9510 or 9505 system configurations

OR

Remodel Power Supply

Ex: PS-LEDX-RM-8007-UNIVL3

PS-LEDX-RM - [ ] - [ ]

ORDERING (ACCESSORIES)

ADDITIONAL EFFECTS DEVICES

☐ **AGL-2**	Amber Glass Lens
☐ **CGL-2**	Clear Glass Lens
☐ **FGL-2**	Frosted Glass Lens
☐ **HCL-2**	Honeycomb Louver
☐ **LSL-2**	Linear Spread Lens
☐ **SGL-2**	Spread Lens
☐ **WTL-2**	Warm Tone Lens

EMERGENCY LIGHTING

☐ **EMB20-LEDX**	20W Emergency Battery Backup

For **IC** or **NC** zero-sightline (ZO) installations, select appliqué profile.

DLA-APP-Z-RD - [ ]

APPLIQUÉ

PROFILE

3	Recommended
5	Level 5 Ceilings

For remodel **RM** installations, select mounting option.

[ ]

REMODEL MOUNTING OPTION

EDL-ZF	Flange overlay collar
EDLA-APP-Z-RD	Zero-sightline appliqué

LUCIFER LIGHTING COMPANY

luciferlighting.com

©2013 Lucifer Lighting Company
As part of its policy of continuous research and product development, the company reserves the right to change or withdraw specifications without prior notice.

3750 IH35 North
San Antonio, Texas 78219
[PH] +1-210-227-7329
[FAX] +1-210-227-4967

[041513]

project: Peoria Childrens Museum
project #: 13.500.10
prepared for: Jack Rouse Associates
prepared by: abernathy lighting design

Issue Date: 1-6-2014
Rev. Date:

type

RB

REJUVENATION
LIGHTING & HOUSE PARTS

Jefferson Item #A2219

http://www.rejuvenation.com/s/5bba

Specification Detail

Item #	A2219	Socket Incandescent

Maximum Fixture Wattage Per Socket
300W
UL Listed
UL Listed Damp
Canopy Width
5.25"
Overall Fixture Width
13"
Overall Fixture Height
14"
Overall Fixture Depth
13.5"
Shade Height
8"

Price as shown: $175.00

Catalogue #: A2219

Lamp: Osram/Sylvania
LED20A21/DIM/0/827

project: Peoria Childrens Museum project #: 13.500.10 prepared for: Jack Rouse Associates prepared by: abernathy lighting design Issue Date: 1-6-2014 Rev. Date:	type **SA** page 1 of 3

www.sylvania.com/ledr

ULTRA LED A-line Lamps
Omnidirectional

LED CREATING TOMORROW

Rated up to 25,000 hours at 70% lumen maintenance, SYLVANIA ULTRA LED A-line omnidirectional lamps offer years of service and reduce energy and maintenance costs. SYLVANIA ULTRA LED lamps are environmentally preferred products. They are RoHS compliant and contain no mercury, lead or other hazardous materials. They emit no UV or IR radiation. A CRI of 80 ensures good color definition and with warm white 2700K CCT, these lamps can be used in many applications in both homes and businesses.

Key Features & Benefits

- Dimmable down to 10%*
- Long life: up to 25,000 hours (L_{70})
- UV and IR free
- Mercury and lead free
- RoHS compliant
- Available in 2700K color temperature
- Suitable for indoor environments only
- Reduces energy consumption up to 82%
- Last up to 33 times longer than incandescent lamps
- No warm-up time, instant-on with full light output and stable color

* Performance may vary depending on dimmer used in application. Please refer to Dimmer Compatibility List (RETRO-DIM) for a list of compatible dimmers or visit www.SYLVANIA.com/LEDRetrofit

RoHS compliant — This lamp source meets restrict on hazardous substances.

Product Offering

Ordering Abbreviation	Wattage	Color Temperature	Typical Lumens
LED8A19/DIM/O/827	8	2700K	470
LED12A19/DIM//O/827	12	2700K	820
LED14A19/DIM/O/827	14	2700K	1100
LED20A21/DIM/O/827	20	2700K	1600

Application Information

Applications
- Downlights
- Pendant fixtures
- Table lamps
- Wall sconces

Market Segments
- Healthcare
- Hospitality
- Residential
- Retail

Application Notes
1. Operating temperature range between -20°C and +45°C (-4°F and + 113°F)
2. Not for use with emergency light fixtures or exit lights
3. Use in open fixture
4. Suitable for indoor use

This device complies with part 15 of the FCC Rules. Operation is subject to the following two conditions: (1) This device may not cause harmful interference, and (2) this device must accept any interference received, including interference that may cause undesired operation. For FCC Part 15 user information, please see www.sylvania.com/fcc15b.

SEE THE WORLD IN A NEW LIGHT SYLVANIA

RETRO053R8 1-13

project: Peoria Childrens Museum project #: 13.500.10 prepared for: Jack Rouse Associates prepared by: abernathy lighting design Issue Date: 1-6-2014 Rev. Date:	type SA page 2 of 3

Specification Data

Catalog #	Type
Project	
Comments	
Prepared by	

Ordering Information

Item Number	Ordering Abbreviation	Wattage (W)	Base Type	Replaces	Input Voltage (V)	Average Rated Life (hrs.)[1]	CCT[3]	Typical Lumens (lm)[2]	CRI[4]	Power Factor	Bulb Finish	ENERGY STAR®
78935	LED8A19/DIM/0/827	8	Medium	40WA19	120	25,000	2700K	470	80	.95	Frosted	Yes
78907	LED12A19/DIM/0/827	12	Medium	60WA19	120	25,000	2700K	820	80	.95	Frosted	Yes
78911	LED14A19/DIM/0/827	14	Medium	75WA19	120	25,000	2700K	1100	80	.98	Frosted	No
78951	LED20A21/DIM/0/827	20	Medium	100WA19	120	25,000	2700K	1600	81	.98	Frosted	No

OSRAM SYLVANIA submits most lamps for ENERGY STAR testing. Early qualification for ENERGY STAR lamps begin at 25,000 hours (L_{70}) regardless that the design of the lamp is manufactured for a greater life expectancy. As the lamps pass ENERGY STAR qualifications, manufacturers are able to increase rated life as dictated by ENERGY STAR guidelines becoming either provisionally qualified or fully qualified. Please visit ENERGYSTAR.gov for more information about testing requirements for ENERGY STAR qualified products.

1. Hours lifetime with 70% (L_{70}) lumen maintenance 2. Thermally stable typical lumens (±10%)
3. Thermally stable typical CCT (±10%) 4. CRI – Color Rendering Index

Ordering Guide

LED	8	A19	/	DIM	/	0	/	827
LED Lamps	Wattage: 8	Lamp Type: A19/A21		Dimmable		Omnidirectional		CRI, CCT: 827: 80+ CRI, 2700K CCT

Lamp Dimensions

	(A) MOL (inches)	(B) Diameter (inches)
LED8A19	4.42	2.44
LED12A19	4.42	2.44
LED14A19	4.42	2.44
LED20A21	5.29	2.99

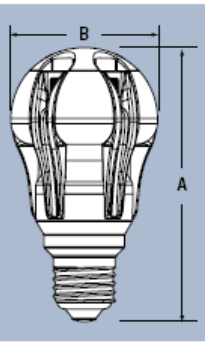

Energy Savings

Basic Product Description	LED Life (hrs.)	LED Lumens	Similar Incandescent	Incandescent Lumens	Incandescent Life (hrs.)	Watts Saved	Energy Savings*	LED Life vs. Incandescent
LED8A19	25,000	470	40W A19	465	1500	32	$ 88.00	>16x
LED12A19	25,000	820	60W A19	850	1000	48	$132.00	25x
LED14A19	25,000	1100	75W A19	1170	750	61	$167.75	>33x
LED20A21	25,000	1600	100W A19	1690	750	80	$220.00	> 33x

*Energy savings over life of lamp calculated at $0.11/kWh

TechniLite SYSTEMS

Specification Information — LED Edge- Lit Slim Sign

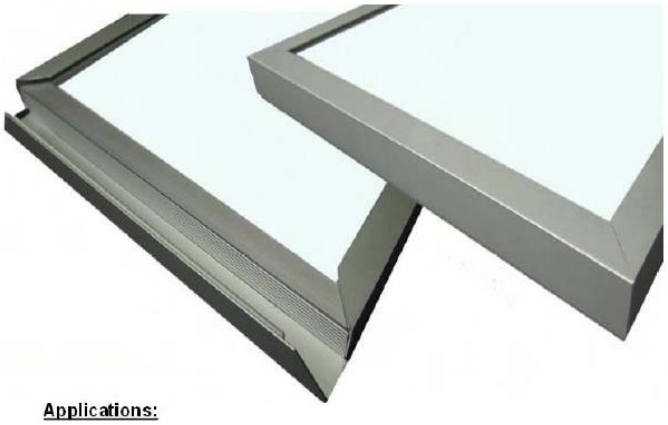

Applications:

Standard	Indoor
Signage	Frame Systems / POP Displays / Light Boxes Display Stands / Hanging Applications
Backlighting	Acrylic
Displays	Kiosk Systems / Fixture / Displays
Retro Fit	Existing Application

Profile:

Maximum Dimension	48" x 96" (4' x 8')
Dimensions	Custom / Build To Order
LED Colour Options	3400k / 5400k / Custom
LED Intensity Options	0.20 General / 0.20 High / 0.50 Super
Extrusion	Aluminum Heat Sink Panel Rigidity Reduce LED Glare Colours – White / Anodized / Custom
Surround Extrusion	Aluminum "L" Extrusion Magnetically Holds Graphic
Face Material	Clear Petg
Backer	Flat / Even / No Distortion
Customize	Incorporate Diffuser Acrylic / Substrates
Power Supplies	Adapter / Transformer
Frames Options	Single Sided
Installation Supports	Hanging / Wall Mount / Drilled Holes

Dimensions: Application Profiles

A) Standard Profile
Depth - 0.875" / 22.225mm
Frame Face - 0..75" / 19.05mm

Catalogue #: LED Edge-24"x24"-3400K

Lamp: LED by Manufacturer

project: Peoria Childrens Museum project #: 13.500.10 prepared for: Jack Rouse Associates prepared by: abernathy lighting design Issue Date: 1-6-2014 Rev. Date:	type **SB** page 1 of 1

Item # 567 895
Model # RB169-C4

USE AND CARE GUIDE

Bairnsdale 4-Light Directional Light Bar

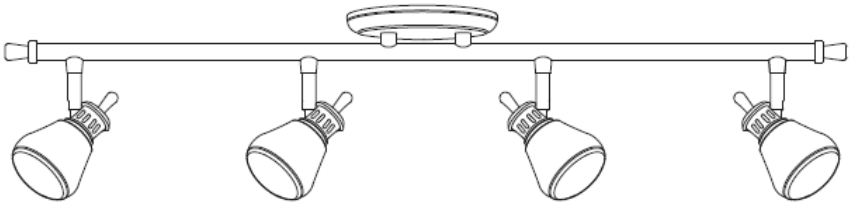

Catalogue #: RB169-C4

Lamp: TCP- LED7GU10MR1627KFL

Questions, problems, missing parts? Before returning to the store call
Hampton Bay Customer Service
8 a.m. - 6 p.m., EST, Monday-Friday

1-877-527-0313

HAMPTONBAY.COM

THANK YOU

We appreciate the trust and confidence you have placed in Hampton Bay through the purchase of this Bairnsdale 4-Light Directional Light Bar
We strive to continually create quality products designed to enhance your home. Visit us online to see our full line of products available for your home improvement needs. Thank you for choosing Hampton Bay!

project: Peoria Childrens Museum project #: 13.500.10 prepared for: Jack Rouse Associates prepared by: abernathy lighting design Issue Date: 1-6-2014 Rev. Date:	type SC

Share Pin it

Hampton Bay 4-Light Satin Nickel Directional Ceiling or Wall Track Lighting Fixture

Model # RB169-C4 Internet # 203486249

Write the First Review +

$78.87 / each

Item cannot be shipped to the following state(s): AK,GU,HI,PR,VI

Free Shipping

Buy Online, Pick Up In Store Today

Check Store Inventory +

Product Overview | Specifications | Customer Reviews | Shipping Options

project: Peoria Childrens Museum project #: 13.500.10 prepared for: Jack Rouse Associates prepared by: abernathy lighting design Issue Date: 1-6-2014 Rev. Date:	type SC page 2 of 4

PRODUCT OVERVIEW

The Hampton Bay 4 Light Bar Satin Nickel Directional Fixture will provide style and light to any decor. The traditional styling of this fixture features a satin nickel plated finish with opal white glass shades. The individual heads are directional and can be aimed to highlight or create dramatic lighting effects.

- Installs directly to a junction box
- Can be used with any standard, 120-Volt, incandescent, dimmer switch
- Multi-directional for a customized focus of light
- Uses three 50-Watt GU10-16 halogen bulbs (included)
- Mounting hardware included
- Opal white glass shades
- Can be either ceiling or wall mounted
- MFG Model # : RB169-C4
- MFG Part # : RB169-C4

Info & Guides

Use and Care Manual

You will need Adobe® Acrobat® Reader to view PDF documents. Download a free copy from the Adobe Web site.

Return To Top

SPECIFICATIONS

Adjustable Lamp Head	Yes	Assembled Depth (in.)	5.625 in
Assembled Height (in.)	6.25 in	Assembled Width (in.)	31.125 in
Certifications and Listings	1-UL Listed	ENERGY STAR Certified	No
Fixture Color/Finish Family	Nickel	Fixture depth (in.)	5.625
Fixture height (in.)	6.25	Fixture width (in.)	31.125
Hardwired or Plug-In	Hardwired	Light Bulb Base Type	GU10
Light Source	Halogen	Manufacturer Warranty	One Year Limited Warranty
Maximum number of heads	4	Movable fixtures	No
Number of Bulbs Required	4	Number of Tracks	0
Product Weight (lb.)	3.388	Recommended bulb type	GU10-16
Returnable	90-Day	Style	Traditional
Track Length (in.)	31.125	Track lighting configuration	Fixed
Track lighting product type	Fixtures	Voltage Type	Standard
Wattage (watts)	200 W		

Return To Top

TCP PRO — LED Dimmable MR16 Lamp

LED Dimmable MR16	25,000 Hours average rated life, 120Volts

Catalog Number	
Notes	Type

Applications:

Ideal for dimmable MR16 flood and spot applications.

- Track Lights
- Recessed Downlights
- Display Lights
- Outdoor fixtures that protect from elements
  Not for use in totally enclosed fixtures.

Features and Benefits

- Smooth, uniform dimming from 100% to 5%
- Energy Efficient: Up to 80% less energy than halogen alternatives
- Exceeds all industry performance requirements.
- Long life: Designed for 25,000 hours (lasts at least 12 times longer than alternative)
- Very Durable: Solid state lighting technology significantly reduces lighting service & maintenance due to robust lighting design. Shatter resistant.
- Very low heat generation – excellent for sensitive display lighting.
- Excellent Color consistency and high color rendering (CRI).

Specifications

Input Line Voltage:	12V & 120V
Input Power	7W
Input Line Frequency	50/60HZ
Lamp Life (Rated)	25,000 hrs
Minimum Starting Temp	-20°C
Maximum Operating Temp	40°C
CCT	27K, 30K, 41K
CRI	85
Beam Angles	20 & 40

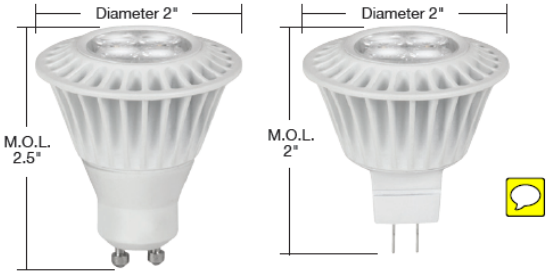

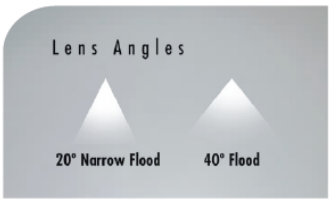

Warranties and Certifications:

3 YEAR WARRANTY

Item #	Description	Voltage	Wattage	Lumens	LPW	CBCP Est.	Beam Angle	CCT	CRI	Case Quantity
120V GU10 MR16										
LED7GU10MR1627KNFL	LED 7W GU10 MR16 Narrow Flood (20 degree) - 2700K	120	7	340	50.7	2300	20	2700K	82	12
LED7GU10MR1627KFL	LED 7W GU10 MR16 Flood (40 degree) - 2700K	120	7	340	50.7	800	40	2700K	82	12
LED7GU10MR1630KNFL	LED 7W GU10 MR16 Narrow Flood (20 degree) - 3000K	120	7	340	52.2	2300	20	3000K	82	12
LED7GU10MR1630KFL	LED 7W GU10 MR16 Flood (40 degree) - 3000K	120	7	340	52.2	800	40	3000K	82	12
LED7GU10MR1641KNFL	LED 7W GU10 MR16 Narrow Flood (20 degree) - 4100K	120	7	370	55.2	2300	20	4100K	82	12
LED7GU10MR1641KFL	LED 7W GU10 MR16 Flood (40 degree) - 4100K	120	7	370	55.2	800	40	4100K	82	12
12V MR16										
LED7MR1627KNFL	LED 7W 12V MR16 Narrow Flood (20 degree) - 2700K	12	7	340	50.7	2300	20	2700K	82	12
LED7MR1627KFL	LED 7W 12V MR16 Flood (40 degree) - 2700K	12	7	340	50.7	800	40	2700K	82	12
LED7MR1630KNFL	LED 7W 12V MR16 Narrow Flood (20 degree) - 3000K	12	7	340	52.2	2300	20	3000K	82	12
LED7MR1630KFL	LED 7W 12V MR16 Flood (40 degree) - 3000K	12	7	340	52.2	800	40	3000K	82	12
LED7MR1641KNFL	LED 7W 12V MR16 Narrow Flood (20 degree) - 4100K	12	7	370	55.2	2300	20	4100K	82	12
LED7MR1641KFL	LED 7W 12V MR16 Flood (40 degree) - 4100K	12	7	370	55.2	800	40	4100K	82	12

Specification Notes:

CBCP was estimated based on known photometry. Consult www.tcpi.com for most current photometry and LM79 data.

TCP, Inc.
325 Campus Dr. | Aurora, Ohio 44202 | P: 1-800-324-1496 | tcpi.com

©TCP, Inc. SEPT 2012/47964

CELEBRATING 20 YEARS OF ENERGY STAR

project: Peoria Childrens Museum project #: 13.500.10 prepared for: Jack Rouse Associates prepared by: abernathy lighting design Issue Date: 1-6-2014 Rev. Date:	type SC

Catalogue #: 20296-WH-FST

Lamp: Osram/Sylvania
LED14A19/DIM/0/827

20296 Nauticus Wet Location Bulkhead

1Lt x 100w Type A-19 Base E-26 2700k 1600Lm

Bulb Type A-19

Lamps Supplied No

Finish BL SAT WH **Glass** FST

Dia 9.5 **Ext** 5

Optional Fluorescent

CUL Wet Available in Fluorescent **Customize**

1200 Valencia Avenue • Tustin • California • 92780 • Phone 714.247.1270 • Fax 714.247.1351

www.sylvania.com/ledr

ULTRA LED A-line Lamps
Omnidirectional

Rated up to 25,000 hours at 70% lumen maintenance, SYLVANIA ULTRA LED A-line omnidirectional lamps offer years of service and reduce energy and maintenance costs. SYLVANIA ULTRA LED lamps are environmentally preferred products. They are RoHS compliant and contain no mercury, lead or other hazardous materials. They emit no UV or IR radiation. A CRI of 80 ensures good color definition and with warm white 2700K CCT, these lamps can be used in many applications in both homes and businesses.

Key Features & Benefits

- Dimmable down to 10%*
- Long life: up to 25,000 hours (L_{70})
- UV and IR free
- Mercury and lead free
- RoHS compliant
- Available in 2700K color temperature
- Suitable for indoor environments only
- Reduces energy consumption up to 82%
- Last up to 33 times longer than incandescent lamps
- No warm-up time, instant-on with full light output and stable color

* Performance may vary depending on dimmer used in application. Please refer to Dimmer Compatibility List (RETRO-DIM) for a list of compatible dimmers or visit www.SYLVANIA.com/LEDRetrofit

Product Offering

Ordering Abbreviation	Wattage	Color Temperature	Typical Lumens
LED8A19/DIM/O/827	8	2700K	470
LED12A19/DIM/O/827	12	2700K	820
LED14A19/DIM/O/827	14	2700K	1100
LED20A21/DIM/O/827	20	2700K	1600

Application Information

Applications
- Downlights
- Pendant fixtures
- Table lamps
- Wall sconces

Market Segments
- Healthcare
- Hospitality
- Residential
- Retail

Application Notes
1. Operating temperature range between -20°C and +45°C (-4°F and + 113°F)
2. Not for use with emergency light fixtures or exit lights
3. Use in open fixture
4. Suitable for indoor use

This device complies with part 15 of the FCC Rules. Operation is subject to the following two conditions: (1) This device may not cause harmful interference, and (2) this device must accept any interference received, including interference that may cause undesired operation. For FCC Part 15 user information, please see www.sylvania.com/fcc15b.

SEE THE WORLD IN A NEW LIGHT SYLVANIA

RETRO053R8 1-13

Specification Data

Catalog #	Type
Project	
Comments	
Prepared by	

Ordering Information

Item Number	Ordering Abbreviation	Wattage (W)	Base Type	Replaces	Input Voltage (V)	Average Rated Life (hrs.)[1]	CCT[3]	Typical Lumens (lm)[2]	CRI[4]	Power Factor	Bulb Finish	ENERGY STAR®
78935	LED8A19/DIM/0/827	8	Medium	40WA19	120	25,000	2700K	470	80	.95	Frosted	Yes
78907	LED12A19/DIM/0/827	12	Medium	60WA19	120	25,000	2700K	820	80	.95	Frosted	Yes
78911	LED14A19/DIM/0/827	14	Medium	75WA19	120	25,000	2700K	1100	80	.98	Frosted	No
78951	LED20A21/DIM/0/827	20	Medium	100WA19	120	25,000	2700K	1600	81	.98	Frosted	No

OSRAM SYLVANIA submits most lamps for ENERGY STAR testing. Early qualification for ENERGY STAR lamps begin at 25,000 hours (L_{70}) regardless that the design of the lamp is manufactured for a greater life expectancy. As the lamps pass ENERGY STAR qualifications, manufacturers are able to increase rated life as dictated by ENERGY STAR guidelines becoming either provisionally qualified or fully qualified. Please visit ENERGYSTAR.gov for more information about testing requirements for ENERGY STAR qualified products.

1. Hours lifetime with 70% (L_{70}) lumen maintenance 2. Thermally stable typical lumens (±10%)
3. Thermally stable typical CCT (±10%) 4. CRI – Color Rendering Index

Ordering Guide

LED	8	A19	/	DIM	/	0	/	827
LED Lamps	Wattage: 8	Lamp Type: A19/A21		Dimmable		Omnidirectional		CRI, CCT: 827: 80+ CRI, 2700K CCT

Lamp Dimensions

	(A) MOL (inches)	(B) Diameter (inches)
LED8A19	4.42	2.44
LED12A19	4.42	2.44
LED14A19	4.42	2.44
LED20A21	5.29	2.99

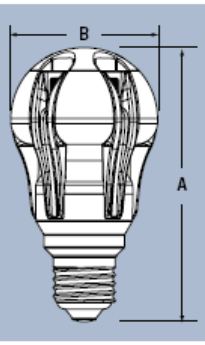

Energy Savings

Basic Product Description	LED Life (hrs.)	LED Lumens	Similar Incandescent	Incandescent Lumens	Incandescent Life (hrs.)	Watts Saved	Energy Savings*	LED Life vs. Incandescent
LED8A19	25,000	470	40W A19	465	1500	32	$ 88.00	>16x
LED12A19	25,000	820	60W A19	850	1000	48	$132.00	25x
LED14A19	25,000	1100	75W A19	1170	750	61	$167.75	>33x
LED20A21	25,000	1600	100W A19	1690	750	80	$220.00	> 33x

*Energy savings over life of lamp calculated at $0.11/kWh

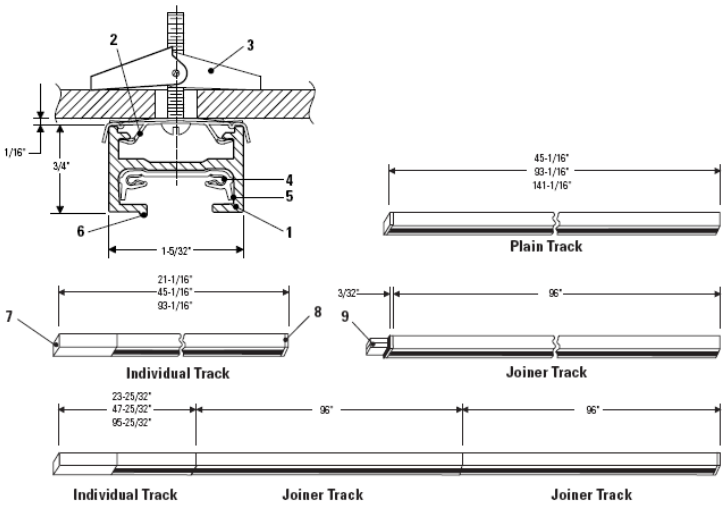

6000NWH	6003NAL	6049NWH	6054NBK	26082
6000NBK	6004NWH	6049NBK	6060NWH	6087
6000NAL	6004NBK	6050NWH	6060NBK	6088
6001NWH	6004NAL	6050NBK	6061NWH	6089
6001NBK	6008NWH	6051NWH	6061NBK	7480
6001NAL	6008NBK	6051NBK	6062WH	7480AL
6002NWH	6008NAL	6052NWH	6062BK	7481
6002NBK	6046NWH	6052NBK	6062NAL	7582
6002NAL	6046NBK	6053NWH	6063WH	7582AL
6003NWH	6048NWH	6053NBK	6063BK	7584
6003NBK	6048NBK	6054NWH	6063NAL	7586

Finishes	Individual Track			Joiner Track	Plain Track		
	Includes Live End Feed Connector			Includes Mini Coupler	Includes Dead End		
	2' Catalog No.	4' Catalog No.	8' Catalog No.	8' Catalog No.	4' Catalog No.	8' Catalog No.	12' Catalog No.
Matte White	**6000NWH**	**6001NWH**	**6002NWH**	**6003NWH**	**6004NWH**	**6008NWH**	**6012NWH**
Matte Black	**6000NBK**	**6001NBK**	**6002NBK**	**6003NBK**	**6004NBK**	**6008NBK**	**6012NBK**
Met Aluminum	**6000NAL**	**6001NAL**	**6002NAL**	**6003NAL**	**6004NAL**	**6008NAL**	**6012NAL**

Features

Basic Lytespan is a one circuit electrical distribution system designed to support and supply all Lytespan lighting units in a flexible manner. The track can be installed individually in straight runs or in a variety of patterns.

1. **Basic Lytespan Track:** 6063-T5 structural aluminum extrusion.
2. **Track Mounting Clips:** 0.024 Spring steel, in black or white; order separately.
3. **Toggle Bolt & Screws:** furnished with track units.
4. **Conductor (2):** copper 12 ga. equivalent. "U" shape provides reliable contact with connectors.
5. **Insulating Liner:** 0.032" wall, high temperature thermoplastic.
6. **Polarity Bead:** identifies the neutral conductor.
7. **Live End:** molded thermoplastic. Contains contacts for power supply leads.
8. **Dead End Cover:** molded thermoplastic.
9. **Mini Coupler:** connects track units mechanically and electrically.

Mounting

The track may be surface or stem mounted (see pages 2, 3, and 4) or installed in a recessed housing (see Specification sheet 7515). The track is not intended to be cable mounted. All lengths can be field cut.

Finish

All painted finishes are baked enamel.

Electrical

Capacity is 20 amps. at 120 volts per branch circuit (2400 watts incandescent load). The track units are polarized and continuously grounded throughout. Electrical conductors are concealed in a insulating liner. Intended for wiring to branch circuit building wire with ground. All wiring must be in accordance with National and Local Codes.

Mechanical

Track units plug together and lock securely to prevent accidental separation. Lytespan lighting units can be attached at any point along the track.

Labels

cUL; I.B.E.W

Job Information	Type:
Job Name:	
Cat. No.:	
Lamp(s):	
Notes:	

Catalogue #: 6000 Series- Finish to be Aluminum

Exact Bill of Materials to be coordinated with Electrical Contractor and Manufacturer.

631 Airport Road, Fall River, MA 02720 • (508) 679-8131 • Fax (508) 674-4710
We reserve the right to change details of design, materials and finish.
www.lightolier.com © 2012 Philips Group • F0512

PHILIPS LIGHTOLIER®

project: Peoria Childrens Museum project #: 13.500.10 prepared for: Jack Rouse Associates prepared by: abernathy lighting design Issue Date: 1-6-2014 Rev. Date:	type **T**

Track Mounting and Power Feed Systems

Track Mounting Clips

Recommended: 2 clips per 2' & 4' track, 3 clips per 8' and 12' track units, order separately. Attaches to track at any point. Clip is nylon coated. Spaces track 1/16" from ceiling.

Not recommended for wall mounting.

56451WH Matte White
56451BK Matte Black

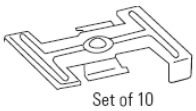

Set of 10

Direct Mounting

Toggle bolts and nylon insulators are furnished with Track, two per 2' and 4' track, three per 8' and 12' track. Mount through existing holes in track. Top of track sits flush to mounting surface.
Recommended for wall and ceiling mounting.

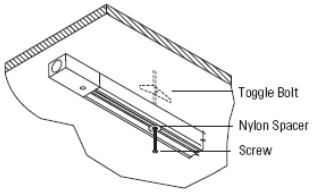

Saddle Canopy Kit

Mounts anywhere along track for power feed from a 4" or 3" octagon outlet box. Use Track Mounting Clips or direct mount track. Especially useful with Plain Track.
Max load 20 amps @ 120V, 60Hz.

6063WH Matte White

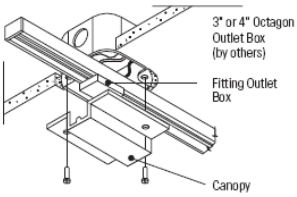

Grid Ceiling Mounting Clips

Square Edge Panels and 9/16"-15/16" T-Bars Clip is supplied assembled. Mounts onto T-Bars by rotating clips. Use two per 2' and 4' track, three per 8', and four per 12' track.

6089 (9) Clips

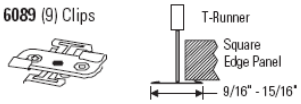

Regressed Edge Panels and 9/16"- 15/16" T-Bar Clip is supplied assembled. Mounts easily onto T-Bars by rotating clips. Use two per 2' and 4' track, three per 8', and four per 12' track.

6087 (9) Clips

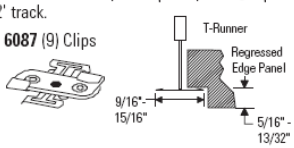

Slotted Grid Ceilings such as Donn Fineline and Chicago Metallic Ultraline 3500 and 3600. Use two per 2' and 4' track, three per 8', and four per 12' track.

6088 (9) Clips

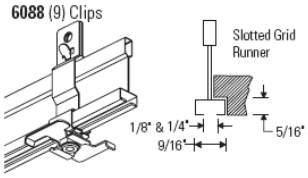

Grid Ceiling Canopy Kit

Mounts to a 4" or 3" octagonal outlet box. Use two per 2' or 4' track, three per 8' and 12' track. When making a run of track do not exceed 4' between stems. Includes a special outlet box to fit onto runners. Power can be fed to Feed Track, Live End, "L", "T", "X", and In-Line connectors. Mounts along runner or at the intersection of runners.

6096WH Matte White
6096BK Matte Black

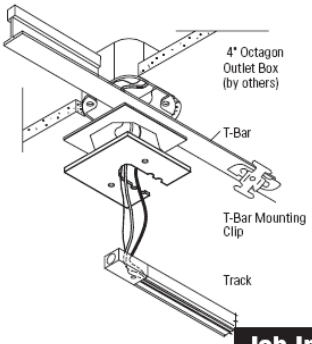

End Feed Canopy Kit

Mounts directly to Live End, 'L', 'T', X', In-Line and Variable Angle Connectors. Mounts to a 4" or 3" octagonal outlet box. For track installed with mounting clips or direct mounted. Canopy is 3/32" thick and 4-1/2" square.

6060WH Matte White
6060BK Matte Black
6060NAL Aluminum

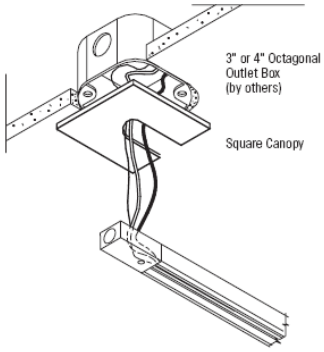

Floating Canopy Kit

Mounts to a 4" or 3" octagonal outlet box. Canopy is positioned anywhere along track, up to 4' from edge of track extrusion. Power can be fed to Live End, 'L', 'T', X', In-Line and Variable Angle Connectors. Mount track using track mounting clips. Canopy is 3/32" thick and 4-1/2" square.

6061WH Matte White
6061BK Matte Black
6061NAL Aluminum

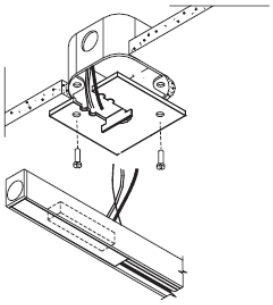

Job Information **Type:**

631 Airport Road, Fall River, MA 02720 • (508) 679-8131 • Fax (508) 674-4710
We reserve the right to change details of design, materials and finish.
www.lightolier.com © 2012 Philips Group • F0512

PHILIPS LIGHTOLIER®

project: Peoria Childrens Museum project #: 13.500.10 prepared for: Jack Rouse Associates prepared by: abernathy lighting design Issue Date: 1-6-2014 Rev. Date:	type T page 2 of 4

Track Mounting and Power Feed Systems

Stem Mounting Kits

Mounts to a 4" or 3" octagon outlet box. Use two per 2' and 4' track, three per 8' and 12' track. When making a run of track do not exceed 4' between stems. Use additional stems for additional support. Power is fed to the track with the stem closest to the track feed-in point. For power feed to Feed Track and Live End, "L", "T", "X", In-line, and Variable Angle Connectors. Stem can be field cut.

Not recommended for wall mounting.

Stem mounts to track not feed connector.

	18" Stem	48" Stem
Actual length from ceiling to top of track:	17 3/8"	47 3/8"
Matte White	**7584**	**7586**
Matte Black	**7683**	**7681**

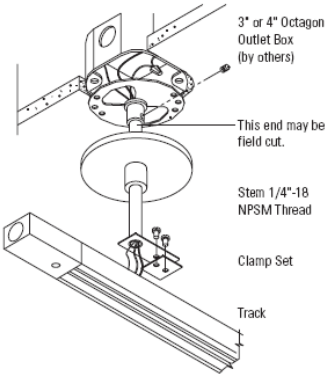

Swivel Stem Mounting Kits

Adjusts from 0 to 90. Mounts to a 4" or 3" octagon outlet box. Use two per 2' and 4' track, three per 8' and 12' track. When making a run of track do not exceed 4' between stems. Use additional stems for additional support. Power is fed to the track with the stem closest to the track feed-in point. For power feed to Feed Track and Live End, "L", "T", "X", In-line, and Variable Angle Connectors. Can be field cut. 48" stem.

Not recommended for wall mounting.

Stem mounts to track not feed connector.

7480 Matte White
7481 Matte Black

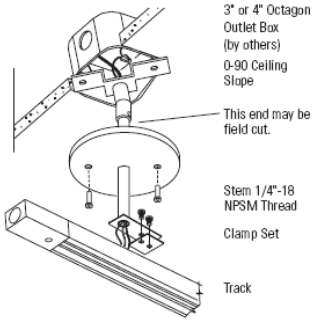

Direct Feed into Connectors

The Live End, "L", "T", "X", In-line, and Variable Angle Connectors contain a nut with a 1/2-14 thread to accept a 3/8" or 1/2" (trade size) electrical connector, 3/8" connector recommended. Does not require a separate power feed kit.

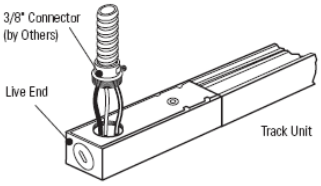

Conduit Adaptor

For feeding power to Live End from secure cable terminating in a 3/8" (trade size) electrical connector. Conduit must be self supporting. For use with 6048 and 6046.

7596 Zinc Plate

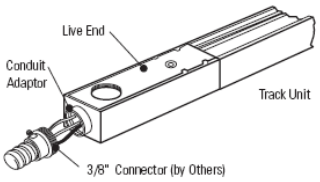

Stem Extension Kit

Mounts to any stem kit to extend its length by 48". Cannot be field cut.

7582 Matte White
7680 Matte Black

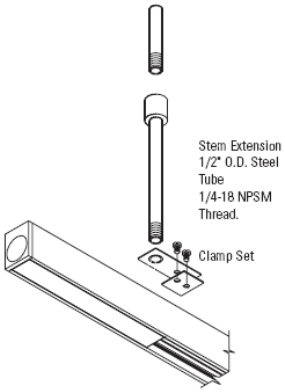

In-Line Connector

Permits power feed between track units in a straight run of track. The In-Line Connector is polarized and pre-wired. KO permits direct feed with electrical connector.

6054NWH Matte White
6054NBK Matte Black
6054NAL Aluminum

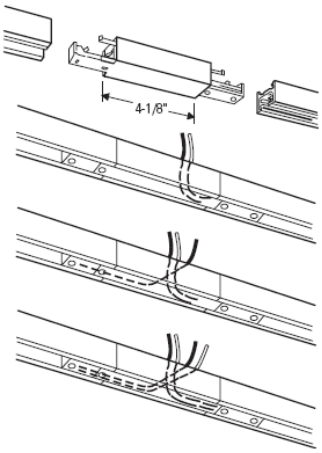

Power Extension Connector

Replaces Dead End Cover at end of track to permit power continuity around structural obstacles to another track section.
Accepts same power feed-in kits as Live End.

6046NWH Matte White
6046NBK Matte Black
6046NAL Aluminum

Over Beam or Through Beam

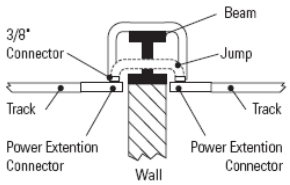

Through Wall or Column

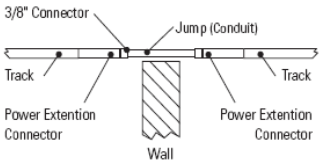

Job Information	**Type:**

631 Airport Road, Fall River, MA 02720 • (508) 679-8131 • Fax (508) 674-4710
We reserve the right to change details of design, materials and finish.
www.lightolier.com © 2012 Philips Group • F0512

PHILIPS LIGHTOLIER®

project: Peoria Childrens Museum project #: 13.500.10 prepared for: Jack Rouse Associates prepared by: abernathy lighting design Issue Date: 1-6-2014 Rev. Date:	type T page 3 of 4

Track Mounting, Power Feed Systems and Mounting Patterns

Variable Angle Connector

The Variable Angle Connector is pre-wired and polarized. It contains a die-cast zinc nut which accepts a standard 3/8" threaded conduit fitting. Flexes to any angle between 0-90.

6053WH Matte White
6053BK Matte Black
6053NAL Aluminum

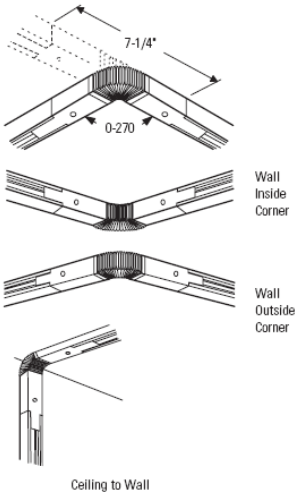

Floating Invisible Feed

Can be mounted anywhere along the track at a maximum distance of 4' from edge of track extrusion. Accepts conduit or cable with 3/8" or 1/2" electrical connector (by others). Can be used with Live End, "L", "T", "X", and In-Line and Variable Angle connectors. Use Track Mounting Clips to mount the track.

26082 Zinc Plated

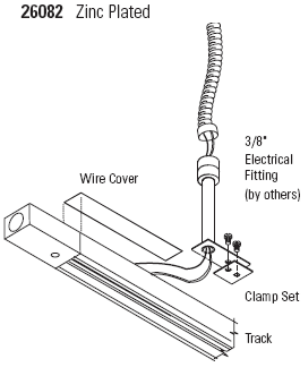

Live End

Energizes Track from the beginning of a run. KO permits direct feed with electrical connector. It is included with Individual Track Units. Use with plain track units.

6048NWH Matte White
6048NBK Matte Black
6048NAL Aluminum

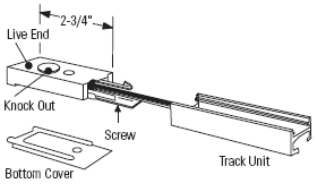

Mini-Coupler

Used to connect two pieces of track together mechanically and electrically. Power cannot be fed to the Mini-Coupler. It is included with Joiner Track Units.

6049NWH Matte White
6049NBK Matte Black
6049NAL Aluminum

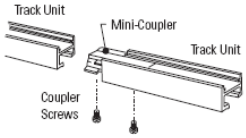

Cord and Plug

Energizes track from a polarized 120V receptacle. Especially useful with plain track. Supplied with a 15' two conductor 18 ga. cord and In-Line switch. The switch is supplied unattached. The track is not to exceed 1200 watts. The switch is rated for 6 amps, 720 watt with cord and plug attached.

6062WH Matte White
6062BK Matte Black

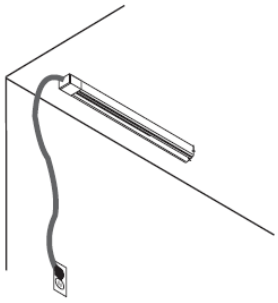

"L" Connector

The "L" connector is polarized and pre-wired. It may be rotated for right angle or left angle turn. KO permits direct feed with electrical connector.

6050NWH Matte White
6050NBK Matte Black
6050NAL Aluminum

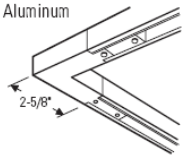

"T" Connector

The "T" connector is not pre-wired or polarized. Used to make "T" pattern with track. 12 ga. copper jumper wires supplied to make all necessary connections. KO permits direct feed with electrical connector.

6051NWH Matte White
6051NBK Matte Black
6051NAL Aluminum

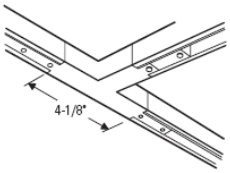

"X" Connector

The "X" connector is not pre-wired or polarized. Used to make "X" pattern with track. 12 ga. copper jumper wires supplied to make all necessary connections. KO permits direct feed with electrical connector.

6052NWH Matte White
6052NBK Matte Black
6052NAL Aluminum

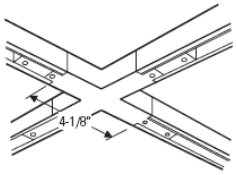

Job Information **Type:**

631 Airport Road, Fall River, MA 02720 • (508) 679-8131 • Fax (508) 674-4710
We reserve the right to change details of design, materials and finish.
www.lightolier.com © 2012 Philips Group • F0512

PHILIPS LIGHTOLIER®

project: Peoria Childrens Museum project #: 13.500.10 prepared for: Jack Rouse Associates prepared by: abernathy lighting design Issue Date: 1-6-2014 Rev. Date:	type T page 4 of 4

LLA11

Lytespan Alcyon LED Medium Cylinder

Catalog number:

Notes: Type:

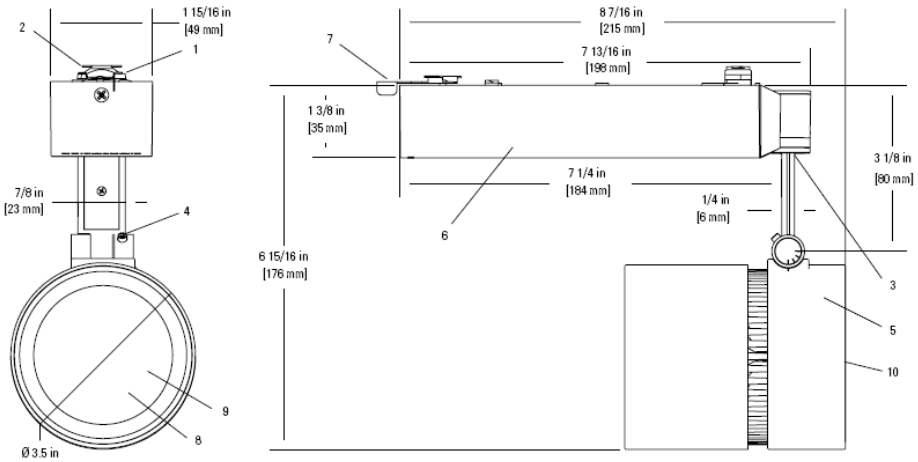

Ordering information example: LLA1130WH

Catalog number	CCT	Finish	Description	Mounting
LLA11 Alcyon LED Medium Cylinder	**27** 3000K **30** 3000K	**WH** White **AL** Aluminum **BK** Black	Dimmable	For use with Lytespan Radius, Basic and Advent Track. Not compatible with extension wands or slope ceiling adapters. For monopoint applications refer to spec sheets 6173.

Features

1. **Track attachment fitting:** For mechanical/electrical connection.
2. **Brass contact:** Extends for connection to second circuit (Advent track only).
3. **Horizontal pivot:** Wireless stem profile with 365° horizontal rotation.
4. **Vertical pivot:** 0-90° vertical adjustment with aiming indicator.
5. **Heat sink:** Die-cast aluminum maintains LED junction temperature for minimum 50,000 hr lifetime at 70% lumen maintenance
6. **Driver housing:** Molded Polycarbonate
7. **Safety locking lever:** Locks driver housing to track
8. **Interchangeable optics:** Sold Seperately. Refer to Spec Sheet LLA11R Series.
9. **Led board:** Metal core board. 9 tightly packed high brightness White LED's.
10. **Synjet:** Integrated active cooling solution used to aid in the thermal management of the heatsink.

Accessories*

Double accessory holder

LLA11AHWH	Double Accessory Holder White
LLA11AHBK	Double Accessory Black

Snoot

LLA11SNWH	Snoot 3.17" dia white
LLA11SNBK	Snoot 3.17" dia black

Louver

LLAHCA11	Hex Cell Louver

Diffusion/Color filters

LLA11AFSY	Symmetrical Spread
LLA11AFSF	Solite Soft Focus

*When using two accessories must use holder.

Reflector options (sold separately)

Ordered separately. Field changeable.

LLA11 Alcyon LED Medium Cylinder	**RS**	Spot reflector
	RNF	Narrow flood reflector
	RF	Flood reflector
	RSSOL	Spot reflector w/Solite
	RNFSOL	Narrow flood reflector w/Solite
example: LLA01RS	**RFSOL**	Flood reflector w/Solite

Electrical

Electronic power supply input voltage: 120V, 50/60 Hz
Input power: 23W Efficacy: Approximately 49 lm/w
High power factor >0.9 ELV dimming available
CRI: 83 (typical)

Dimming

ZP425QE	Lightolier Controls
SELV-300P-WH	Lutron Skylark
IPE04-ILX	Leviton Decora

Finish

All Painted finishes are baked enamel. Back of heatsink is black on BK & AL.

Labels

c.U.L.u.s. listed. 5 year warranty,
DLC compliant.

PHILIPS LIGHTOLIER

project: Peoria Childrens Museum project #: 13.500.10 prepared for: Jack Rouse Associates prepared by: abernathy lighting design Issue Date: 1-6-2014 Rev. Date:	type **TA** page 1 of 2

LLA11

Lytespan Alcyon LED Medium Cylinder

Aiming Angle: 0° | 30° Horizontal | 60° Vertical | 45° Vertical

L Beam length
W Beam Width
C Distance to center beam
D Distance
A Aiming Angle
FC Footcandles

L and **W** are the outer points where the candle power drops to 50% of the maximum. **FC** are the initial footcandles at the center of the beam. Data shown is for 3000K, for 2700K multiply FC by 0.91.

CBCP = Center Beam Candle Power.

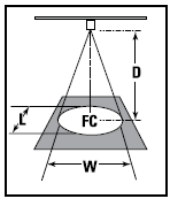

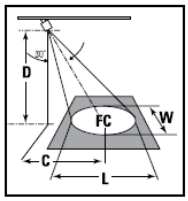

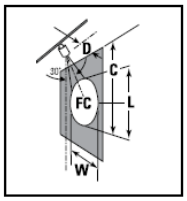

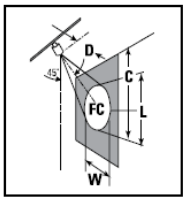

	Beam Spread (To 50% CBCP)	CBCP	Rated Life (Hrs.)	D	FC	L	W	D	C	FC	L	W	D	C	FC	L	W	D	C	FC	L	W
LLA11RS w/Solite Lens	25°	3,911	50,000	6	109	2.7'	2.7'	5'	2.9'	102	3.0'	2.6'	2'	3.5'	122	4.2'	1.8'	2'	2.0'	346	1.9'	1.3'
				7	80	3.1'	3.1'	6'	3.5'	71	3.6'	3.1'	3'	5.2'	54	6.2'	2.7'	3'	3.0'	154	2.8'	1.9'
				8	61	3.5'	3.5'	7'	4.0'	52	4.2'	3.6'	4'	6.9'	31	8.3'	3.5'	4'	4.0'	86	3.7'	2.5'
				9	48	4.0'	4.0'	8'	4.6'	40	4.8'	4.1'	5'	8.7'	20	10.4'	4.4'	5'	5.0'	55	4.7'	3.1'
	Beam Spread (To 50% CBCP)	CBCP	Rated Life (Hrs.)	D	FC	L	W	D	C	FC	L	W	D	C	FC	L	W	D	C	FC	L	W
LLA11RNF w/Solite Lens	27°	3,520	50,000	5	141	2.4'	2.4'	5'	2.9'	91	3.3'	2.8'	2'	3.5'	110	4.6'	1.9'	2'	2.0'	311	2.0'	1.4'
				6	98	2.9'	2.9'	6'	3.5'	64	3.9'	3.3'	3'	5.2'	49	7.0'	2.9'	3'	3.0'	138	3.1'	2.0'
				7	72	3.4'	3.4'	7'	4.0'	47	4.6'	3.9'	4'	6.9'	28	9.3'	3.8'	4'	4.0'	78	4.1'	2.7'
				8	55	3.8'	3.8'	8'	4.6'	36	5.2'	4.4'	6'	10.4'	12	13.9'	5.8'	6'	6.0'	35	6.1'	4.1'
	Beam Spread (To 50% CBCP)	CBCP	Rated Life (Hrs.)	D	FC	L	W	D	C	FC	L	W	D	C	FC	L	W	D	C	FC	L	W
LLA11RF w/Solite Lens	36°	2,366	50,000	5	95	3.2'	3.2'	5'	2.9'	61	4.5'	3.8'	2'	2.6'	131	5.7'	1.9'	2'	2.0'	209	2.9'	1.8'
				6	66	3.9'	3.9'	6'	3.5'	43	5.4'	4.5'	2'	3.5'	74	7.6'	2.6'	3'	3.0'	93	4.4'	2.8'
				7	48	4.5'	4.5'	7'	4.0'	31	6.3'	5.3'	3'	5.2'	33	11.4'	3.9'	4'	4.0'	52	5.8'	3.7'
				8	37	5.2'	5.2'	8'	4.6'	24	7.2'	6.0'	4'	6.9'	18	15.2'	5.2'	6'	6.0'	23	8.7'	5.5'
	Beam Spread (To 50% CBCP)	CBCP	Rated Life (Hrs.)	D	FC	L	W	D	C	FC	L	W	D	C	FC	L	W	D	C	FC	L	W
LLA11RS w/Clear Lens	20°	5,740	50,000	6	159	2.1'	2.1'	6'	3.5'	104	2.9'	2.4'	2'	3.5'	179	3.1'	1.4'	3'	3.0'	225	2.2'	1.5'
				7	117	2.5'	2.5'	7'	4.0'	76	3.3'	2.9'	3'	5.2'	80	4.7'	2.1'	4'	4.0'	127	2.9'	2.0'
				8	90	2.8'	2.8'	8'	4.6'	58	3.8'	3.3'	4'	6.9'	45	6.2'	2.8'	5'	5.0'	81	3.6'	2.5'
				9	71	3.2'	3.2'	9'	5.2'	46	4.3'	3.7'	5'	8.7'	29	7.8'	3.5'	6'	6.0'	56	4.4'	3.0'
	Beam Spread (To 50% CBCP)	CBCP	Rated Life (Hrs.)	D	FC	L	W	D	C	FC	L	W	D	C	FC	L	W	D	C	FC	L	W
LLA11RNF w/Clear Lens	25°	4,605	50,000	5	128	2.7'	2.7'	6'	3.5'	83	3.6'	3.1'	2'	3.5'	144	4.2'	1.8'	2'	2.0'	407	1.9'	1.3'
				6	94	3.1'	3.1'	7'	4.0'	61	4.2'	3.6'	3'	5.2'	64	6.2'	2.7'	3'	3.0'	181	2.8'	1.9'
				7	72	3.5'	3.5'	8'	4.6'	47	4.8'	4.1'	4'	6.9'	36	8.3'	3.5'	4'	4.0'	102	3.7'	2.5'
				8	57	4.0'	4.0'	9'	5.2'	37	5.4'	4.6'	6'	10.4'	16	12.5'	5.3'	6'	6.0'	45	5.6'	3.8'
	Beam Spread (To 50% CBCP)	CBCP	Rated Life (Hrs.)	D	FC	L	W	D	C	FC	L	W	D	C	FC	L	W	D	C	FC	L	W
LLA11RF w/Clear Lens	35°	2,565	50,000	5	71	3.8'	3.8'	6'	3.5'	46	5.2'	4.4'	2'	2.6'	143	5.4'	1.9'	2'	2.0'	227	2.8'	1.8'
				6	52	4.4'	4.4'	7'	4.0'	34	6.1'	5.1'	2'	3.5'	80	7.2'	2.5'	3'	3.0'	101	4.2'	2.7'
				7	40	5.0'	5.0'	8'	4.6'	26	7.0'	5.8'	3'	5.2'	36	10.8'	3.8'	4'	4.0'	57	5.6'	3.6'
				8	32	5.7'	5.7'	9'	5.2'	21	7.8'	6.6'	4'	6.9'	20	14.4'	5.0'	6'	6.0'	25	8.4'	5.4'

Photometric performance:

Tested in accordance to IESNA LM79-2008

Catalogue #: LLA11-30-AL-RNF

Lamp: LED by Manufacturer

Philips Lightolier
e: lol.webmaster@philips.com
t: (508) 679-8131
w: www.lightolier.com

LLA11 November 28, 2012

Specifications are subject to change without notice.
© Koninklijke Philips Electronics N.V., 2010.All rights reserved.

project: Peoria Childrens Museum project #: 13.500.10 prepared for: Jack Rouse Associates prepared by: abernathy lighting design Issue Date: 1-6-2014 Rev. Date:	type **TA** page 2 of 2

PROFILE LIGHTING

Catalog Numbers
ME3-*-**

The ME3 ellipsoidal is a high efficiency LED framing projector with a 20°-40° variable zoom focus. Utilizing a 3,000°K 25w LED source with an expected life of 50,0000 hours, the ME3 features bright and crisp pattern or graphic projections via optional steel or glass E size patterns.

The dual lenses of the ME3 feature an anti-reflective coating and move smoothly on guide rods with Teflon bushings to provide accurate alignment . Four framing shutters are provided for precise shaping of the projected light.

The ME3's high efficiency, small size and precision optics make it perfect for museums, retail, restaurant and other venues that require a small ellipsoidal framing projector.

25 WATT
ME3 - MICRO ELLIPSE III

Features

- Altman Smart Track compatible
- Track, Canopy, Stem and Unistrut options
- High efficiency 3,000°K LED white light source with excellent color rendering
- 1,200 lumens
- 20°-40° zoom optics on teflon rod & guide system
- Four framing shutters with insulated handles
- Color frame and safety cable included
- Accepts steel or glass E sized patters or M sized dual gobo rotator
- 50,000 hour rated life for 25W LED source
- Dimmable (10-100%) on Smart Track. Non-Dimmable with standard track, canopy and portable luminaire options
- ETL, cETL and CE Listed for Indoor Use
- Made in the USA

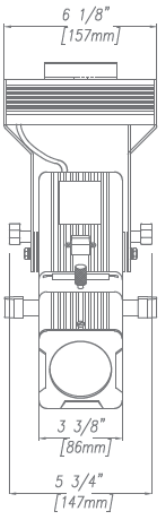

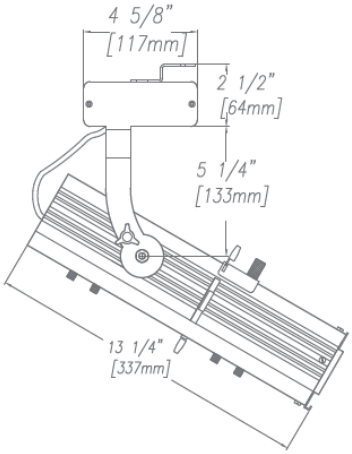

Model #	
ME3-*-**	Micro Ellipse III
* (Body Color)	Add the following code for Body Color: B=Black, W=White, S=Silver, C=Custom
** (Factory options)	SEE PAGE 2

ALTMAN Lighting
BRINGING IMAGINATION TO LIGHT

57 Alexander St., Yonkers, NY 10701 Tel: 914-476-7987 Visit our website at www.altmanlighting.com
© 2012 Altman Stage Lighting, Inc.

project: Peoria Childrens Museum project #: 13.500.10 prepared for: Jack Rouse Associates prepared by: abernathy lighting design Issue Date: 1-6-2014 Rev. Date:	type TC page 1 of 2

Specifications:

Materials: Corrosion-resistant materials and hardware.

Housing: Ribbed aluminum extrusions.

Light Engine: 25W 3,000°K White, 1200 Lumens.

Lenses: Crown glass (white plate) lenses. Movable lenses mounted on lens carriers with Teflon glide bearings

Rating: 0.20 amp @ 120 volts AC operation, 0.11 amp @ 220 volts AC operation,120v or 220v.

Cable: 6' total length with molded male Edison plug (unless track adapter or other is specified).

Shutters: Galvanized stell, fully adjustable and removable with heat resistant lenses.

Lens Focusing: Lens movements contained within body, adjustable with heat resistant handles.

Accessories: External front slot accepts 3-3/8" square x 1/8" thick accessories. Internal pattern slot accepts size E (37.5mm) patters with Altman pattern holder(MAPH-G) or Master Spin dual rotator.

Finish: Black, White or Silver TGIC polyester, electrostatic application. Custom colors available.

Weight: Approx. 6 lbs.

Model #	
ME3-*-**	ME3 LED Profile
* (Body Color)	Add the following code for Body Color: B=Black, W=White, S=Silver, C=Custom
** (Factory Installed)	See Below

**-Factory Installed	Description
Y	Two Circuit Smart Track adapter installed with on-board DMX/RDM addressable 0-10V dimmer.
TLA-E166	Nordic Eco 1 Circuit Track Adapter
TLA-TEK100	Nordic Spec Grade 2 Circuit Track Adapter
TLA-GA100UL	Nordic Spec Grade 3 Circuit Track Adapter
TLA-L	Lightolier Lytespan 1 Circuit Track Adapter
TLA-H	Halo 1 Circuit Track Adapter
Coil Chord	Coiled Chord with Edison Connector - 24" retracted, 6 foot extended.
Canopy	5" Diameter Canopy with universal mounting bracket
Unistrut	Unistrut bracket installed - spring nuts by others.
Stem	Custom Stem to Canopy mount available. Max length: 6'.

Additional Accesories	Description
MCF	Color frame, 3-3/8"x3=3/8"
MSC	Mini Safety Cable 18"
MBD	4-way Barn Doors
MECT	Beam Reducing Circular Template
MAPH-G	Pattern Holder, 1-1/4" Diameter E size opening
MA-DN	3-38"x 3-38" Donut, Black, with 1-3/4" Opening
MICRO-SN*	Silver. Snoot

Catalogue #: ME3-S-TLA-L/MAPH-G (finish to be Silver)

Lamp: LED by Manufacturer

Patterns
Rosco- 77806 Large Leaf Breakup (e-size)
Rosco- 77448 Clouds Distorted (e-size)

Performance:

ME3 NARROW

Throw Distance (d)	10' 3m	15' 4.6m	20' 6.1m	25' 7.6m
Beam Size, (H x V)	4.4' x 4.4' 1.3m x 1.3m	6.5' x 6.5' 2m x 2m	8.7' x 8.7' 2.7m x 2.7m	4.8' x 4.8' 3.3m x 3.3m
Illuminance (fc)	8	4	2	1
Illuminance (lux)	86	38	22	14

ME3 WIDE

Throw Distance (d)	10' 3m	15' 4.6m	20' 6.1m	25' 7.6m
Beam Size, (H x V)	7' x 7' 2.1m x 2.1m	10.4' x 10.4' 3.2m x 3.2m	14' x 14' 4.2m x 4.2m	17.4' x 17.4' 5.3m x 5.3m
Illuminance (fc)	4	2	1	1
Illuminance (lux)	40	18	10	6

ALTMAN Lighting
BRINGING IMAGINATION TO LIGHT

57 Alexander St., Yonkers, NY 10701 Tel: 914-476-7987 Visit our website at www.altmanlighting.com
© 2012 Altman Stage Lighting, Inc.

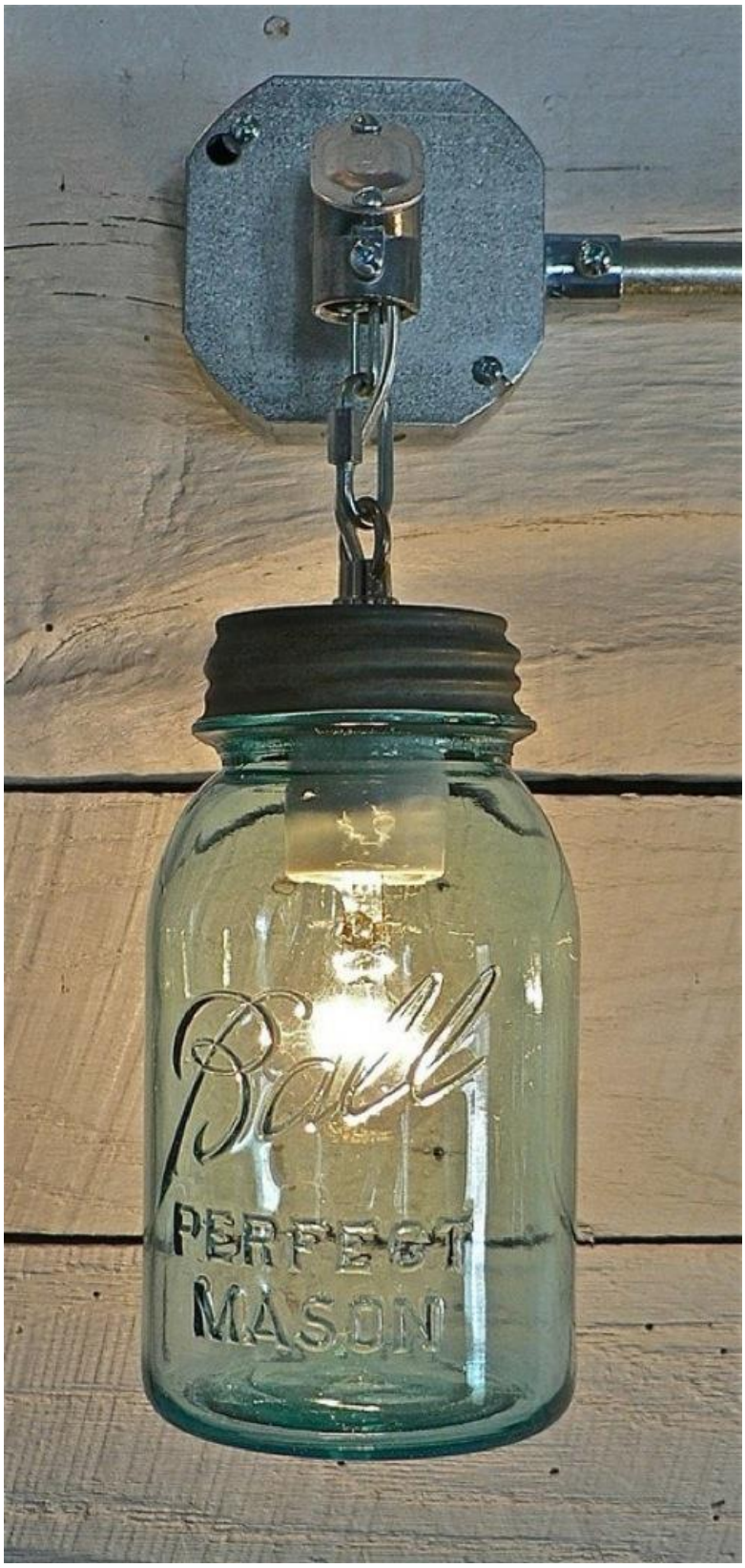

project: Peoria Childrens Museum project #: 13.500.10 prepared for: Jack Rouse Associates prepared by: abernathy lighting design Issue Date: 1-6-2014 Rev. Date:	type **WA**

This hardwired fixture is handcrafted using a vintage blue mason jar, original zinc cap included, galvanized steel conduit, zinc chain and hardware, glazed porcelain socket. Jar may vary slightly from pictures. They are all unique and beautiful. The jar is in vintage, used condition and may have some minor imperfections. These imperfections do NOT interfere with the structural integrity. All UL-Listed materials are used in its construction. 15 watt bulb is shown and is not included. Socket rated up to 100 watts, but we do not recommend using 100 watts for this fixture. Please see photos for more details and feel free to contact us with any questions.
Thank you!

MADE UPON REQUEST

Fixture dimensions:

overall height - 13"
overall width - 4"
depth - 6"

Catalogue #: Handcrafted Blue Mason Jar Sconce
http://www.etsy.com/listing/106364956/handcrafted-blue-mason-jar-sconce?ref=related-0

Lamp: TCP-LED5E26B1127KF

TCP PRO — LED Dimmable Decorative Series

LED	25,000 Hours average rated life, 120Volts

Catalog Number	
Notes	Type

Applications:

Ideal for decorative dimming applications. Suitable for outdoor fixtures.
Also perfect for applications with hard to reach areas, vibration, and frequent starts.

Accent and decorative lighting including:

- Chandeliers
- Ceiling Fans
- Decorative
- Indoor Fixtures
- Outdoor Fixtures

Light output equivalent to 25W.

Features and Benefits

- Long Life: 25,000 hours – no more bulb replacements!
- Fully dimmable, brilliant LED light.
- Excellent white color consistency from bulb to bulb
- UL approved for dry and damp locations.
- Available in E12 and E26 base.

** Three or more lamps per dimming circuit is recommended fo optimal dimming.*

Specifications (at full brightness)

Input Line Voltage:	120VAC
Input Line Frequency	60HZ
Lamp Life (Rated)	25,000 hrs
Minimum Starting Temp	-30°C
Maximum Operating Temp	40°C
UL/cUL Listed	Yes
Power Factor	92%
CRI	82

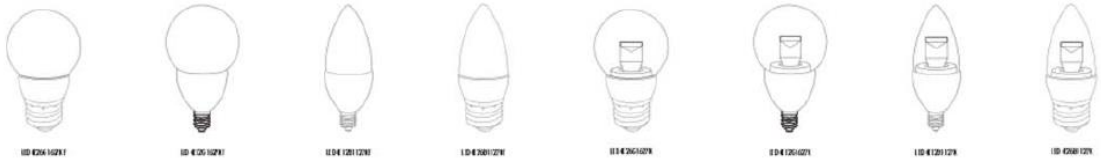

Warranties and Certifications:		Item #	Description	Voltage	Wattage	Wattage Equivalent	M.O.L. (inches)	Diameter (inches)	Lumens	LPW	CCT	CRI
3 YEAR WARRANTY	5W	LED5E12B1127K	LED 5W DIMMABLE CANDELABRA BLUNT TIP - 2700K	120	5.0	40W	3.8	1.4	300	60	2700K	82
		LED5E26B1127K	LED 5W DIMMABLE BLUNT TIP - 2700K	120	5.0	40W	3.8	1.4	300	60	2700K	82
		LED5E12B1127KF	LED 5W DIMMABLE CANDELABRA FROSTED BLUNT TIP - 2700K	120	5.0	40W	3.8	1.4	300	60	2700K	82
		LED5E26B1127KF	LED 5W DIMMABLE FROSTED BLUNT TIP - 2700K	120	5.0	40W	3.8	1.4	300	60	2700K	82
		LED5E12G1627K	LED 5W DIMMABLE CANDELABRA G16 GLOBE - 2700K	120	5.0	40W	3.5	2.0	300	60	2700K	82
		LED5E26G1627K	LED 5W DIMMABLE G16 GLOBE - 2700K	120	5.0	40W	3.5	2.0	300	60	2700K	82
		LED5E12G1627K	LED 5W DIMMABLE CANDELABRA FROSTED G16 GLOBE - 2700K	120	5.0	40W	3.5	2.0	300	60	2700K	82
		LED5E26G1627K	LED 5W DIMMABLE FROSTED G16 GLOBE - 2700K	120	5.0	40W	3.5	2.0	300	60	2700K	82
	4W	LED4E12B1127K	LED 4W DIMMABLE CANDELABRA BLUNT TIP - 2700K	120	3.7	25W	3.8	1.4	200	50	2700K	82
		LED4E26B1127K	LED 4W DIMMABLE BLUNT TIP - 2700K	120	3.7	25W	3.8	1.4	200	50	2700K	82
		LED4E12B1127KF	LED 4W DIMMABLE CANDELABRA FROSTED BLUNT TIP - 2700K	120	3.7	25W	3.8	1.4	200	50	2700K	82
		LED4E26B1127KF	LED 4W DIMMABLE FROSTED BLUNT TIP - 2700K	120	3.7	25W	3.8	1.4	200	50	2700K	82
		LED4E12G1627K	LED 4W DIMMABLE CANDELABRA G16 GLOBE - 2700K	120	3.7	25W	3.5	2.0	200	50	2700K	82
		LED4E26G1627K	LED 4W DIMMABLE G16 GLOBE - 2700K	120	3.7	25W	3.5	2.0	200	50	2700K	82
		LED4E12G1627K	LED 4W DIMMABLE CANDELABRA FROSTED G16 GLOBE - 2700K	120	3.7	25W	3.5	2.0	200	50	2700K	82
		LED4E26G1627K	LED 4W DIMMABLE FROSTED G16 GLOBE - 2700K	120	3.7	25W	3.5	2.0	200	50	2700K	82

TCP, Inc.
325 Campus Dr. | Aurora, Ohio 44202 | P: 1-800-324-1496 | F: 330-995-6188 | tcpi.com
© TCP, Inc. JAN 2013/49558

CELEBRATING 20 YEARS OF ENERGY STAR

project: Peoria Childrens Museum project #: 13.500.10 prepared for: Jack Rouse Associates prepared by: abernathy lighting design Issue Date: 1-6-2014 Rev. Date:	type **WA**

1-year warranty

LM/79 LM/80

plane

INTERIOR/EXTERIOR APPLICATIONS

LUMINOUS CUBE INSERT

Application

The **plane** with luminous cube insert is an LED-based luminaire that offers a variety of different color combinations for edge glow and luminous cube center insert options. Excellent for exterior building and bridge demarcation as well as interior applications where ambient illumination levels typically do not compete (e.g., restaurants, clubs and some retail). **plane** mounts directly to a junction box for wall mount applications. UL listed for wet / damp locations.

Light Output

For more information on luminous distribution for all LED colors of light, contact an **io** representative.

Construction

Environmentally sealed, enclosed and gasketed 5.9" sq. corrosion resistant metal casting (stainless steel optional). Mounts directly to a UV stable, optically clear, high strength polycarbonate housing. LED luminaire modules contained within the housing are replaceable by factory.

Mounting Options

plane mounts directly to a junction box while the driver (power supply) resides within the junction box. Three types of junction box configurations are compatible with **plane**:

1) 1½" deep, 4" octagonal junction box. Hanger bars must be side mounted.
2) 2⅛" deep, 4" octagonal junction box with side mounted hanger bars.
3) 2⅛" deep, 4" square junction box with plaster ring.

Electrical

120v or 277v energy saving current limiting Class 2 power supply (driver) is located within a 1½" or 2⅛" deep, 4" octagonal junction box.

LED Magnetic Driver Specifications

Input voltage:	120v or 277v
Output Load:	8 watts including center and perimeter LEDs.
Operating Temperature of the Luminaire:	-20°F + 140°F -30°C + 60°C
UL Class:	2
Surface Temperature:	25°C
Expected Life:	50,000 hours

Power Consumption

Standard Output: 8 w

Luminous Cube Insert

The gem-like cube insert has been precisely molded using ¼" wall thicknesses and the highest quality borosilicate glass. Diffusion properties are designed into the mold to diminish LED lamp image, offering a soft center glow, revealing the architecture of the cube.

Finish

Metal die-cast face plate may be polyester powder coated or plated. Plated finishes are for interior applications only. Face plate may also be specified in stainless steel.

Catalogue #: 0-01-C-3K-3K-100-2-0

Lamp: LED by Manufacturer

Dimensions

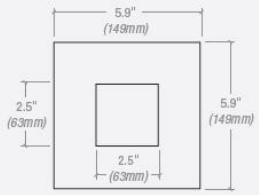

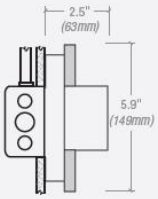

io Lighting 1100 Busch Pkwy Buffalo Grove, IL 60089 T 847.777.3900 F 847.777.3901 E info@iolighting.com W iolighting.com

project: Peoria Childrens Museum project #: 13.500.10 prepared for: Jack Rouse Associates prepared by: abernathy lighting design Issue Date: 1-6-2014 Rev. Date:	type **WB** page 1 of 2

plane
LUMINOUS CUBE INSERT

Color Options

CENTER COLOR

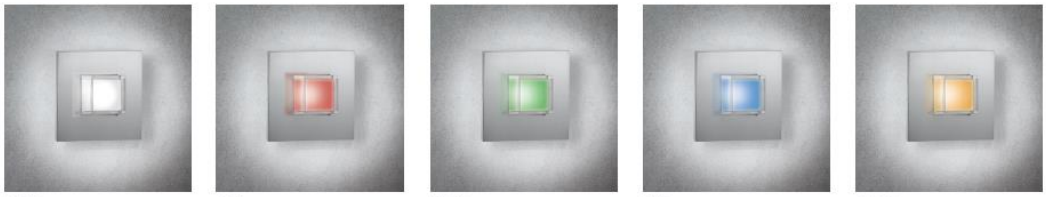

White | Red | Green | Blue | Amber

PERIMETER COLOR

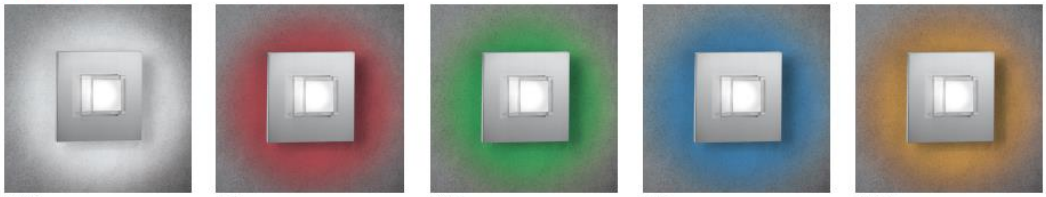

White | Red | Green | Blue | Amber

Mounting Details

Metal Die-Casting

Clear Polycarbonate Backplate

Universal Steel Mounting Bracket

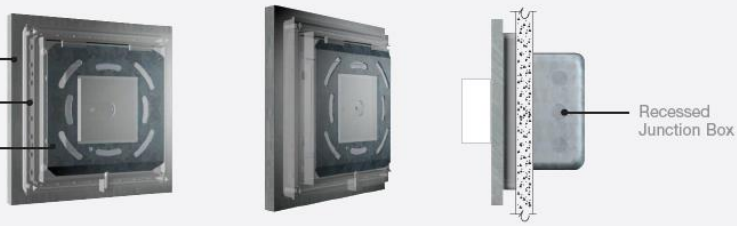

Order Code

0	.	01	.		.		.		.		.		.	
io		1		2		3		4		5		6		7

1. PRODUCT FAMILY
01 Plane

2. TYPE
C Cube Interior
CE Cube Exterior

3. CENTER COLOR
3K Warm White
5K Cool White
R Red
G Green
B Blue
A Amber
CC Custom Color[1]

4. PERIMETER COLOR
3K Warm White
5K Cool White
R Red
G Green
B Blue
A Amber
CC Custom Color[1]

5. MOUNTING
100 J-Box
999 Custom

6. FINISH
METAL CASTING (POWDER COATED)
1 Black
2 Bronze
3 Satin aluminum
4 White

METAL CASTING (PLATED)
INTERIOR APPLICATIONS ONLY
5 Satin nickel
6 Chrome
7 Satin brass

STAINLESS STEEL
8 Brushed

CUSTOM COLOR
9 Custom

7. VOLTAGE
0 120v
1 277v
2 Other (International voltage)

Note: Consult factory for custom voltage options. Dimming not available.

YouTube
plane applications
youtube.com/iolighting

Footnotes

1. Non-standard color temperature and CRI are available. Consult factory for availability.

io Lighting 1100 Busch Pkwy Buffalo Grove, IL 60089 T 847.777.3900 F 847.777.3901 E info@iolighting.com W iolighting.com

project: Peoria Childrens Museum project #: 13.500.10 prepared for: Jack Rouse Associates prepared by: abernathy lighting design Issue Date: 1-6-2014 Rev. Date:	type **WB** page 2 of 2

LITEPAD™ HO+

PRODUCT DESCRIPTION

LitePad HO+ is a slim profile, edge-lit LED light source. At only 1/3" (a third of an inch) thick, LitePad HO+ is able to fit in places where conventional light sources will not. LitePad HO+ produces a soft quality of light that is easy on the eyes and runs at cool temperatures. Available in eight standard sizes, LitePad HO+ has LEDs on all four sides of the perimeter for maximum brightness. An interior connector provides a solid power connection directly on the LitePad itself. Available in both daylight and tungsten color temperatures, LitePad HO+ can fit a wide variety of applications.

SIZES

LitePad HO+ Daylight	
290403060120	LitePad 3x6 HO+ Daylight
290403120120	LitePad 3x12 HO+ Daylight
290406060120	LitePad 6x6 HO+ Daylight
290406120120	LitePad 6x12 HO+ Daylight
290412120120	LitePad 12x12 HO+ Daylight
290424240120	LitePad 24x24 HO+ Daylight
290400030120	LitePad 3 Circle HO+ Daylight
290400120120	LitePad 12 Circle HO+ Daylight

LitePad HO+ Tungsten	
290503060120	LitePad 3x6 HO+ Tungsten
290503120120	LitePad 3x12 HO+ Tungsten
290506060120	LitePad 6x6 HO+ Tungsten
290506120120	LitePad 6x12 HO+ Tungsten
290512120120	LitePad 12x12 HO+ Tungsten
290524240120	LitePad 24x24 HO+ Tungsten
290500030120	LitePad 3 Circle HO+ Tungsten
290500120120	LitePad 12 Circle HO+ Tungsten

IN THE BOX

LitePad HO+
Transformer
Right Angle Extension Cable

Catalogue #: 290500030120

Lamp: LED by Manufacturer

(continued)

www.rosco.com
52 Harbor View Avenue, Stamford, CT 06902 • (203)708-8900 • 1(800)ROSCO NY • Fax: (203)708-8919
1265 Los Angeles Street, Glendale, CA 91204 • (818)543-6700 • 1(800)ROSCO LA • Fax: (818)662-9470
Also in: Toronto, London, Madrid, São Paulo and Sydney

project: Peoria Childrens Museum
project #: 13.500.10
prepared for: Jack Rouse Associates
prepared by: abernathy lighting design

Issue Date: 1-6-2014
Rev. Date:

type
WC

LITEPAD™ HO+

DIMENSIONS & WEIGHT

	Width	Length	Depth	Weight
3" Circle	3.0" Diameter		0.37"	0.10 lbs.
12" Circle	12.0" Diameter		0.37"	1.60 lbs.
3" x 6"	3.0"	6.0"	0.37"	0.30 lbs.
3" x 12"	3.0"	12.0"	0.37"	0.55 lbs.
6" x 6"	6.0"	6.0"	0.37"	0.55 lbs.
6" x 12"	6.0"	12.0"	0.37	1.10 lbs.
12" x 12"	12.0"	12.0"	0.37"	2.15 lbs.
24" x 24"	24.0"	24.0"	0.37"	8.30 lbs.

LIGHT OUTPUT

	Units	12"	18"	24"	36"	48"
3" Circle	FC	21	9	5.3	2.5	1.5
	LUX	230	100	57	26	16
12" Circle	FC	170	80	45	21	11
	LUX	1800	840	500	230	120
3" x 6"	FC	50	23	13	6	3.5
	LUX	520	240	140	65	37
3" x 12"	FC	70	37	21	10	5.6
	LUX	800	400	230	110	60
6" x 6"	FC	70	34	18	8.5	5
	LUX	740	370	200	90	53
6" x 12"	FC	120	60	34	16	9
	LUX	1300	640	370	170	100
12" x 12"	FC	180	90	52	25	14
	LUX	1900	970	560	260	150
24" x 24"	FC	250	160	97	50	32
	LUX	2700	1700	1000	520	340

POWER CONSUMPTION

	Wattage	Amps
3" Circle	4.5	0.38
12" Circle	19.5	1.63
3" x 6"	8.25	0.69
3" x 12"	15	1.25
6" x 6"	11.25	0.94
6" x 12"	18	1.50
12" x 12"	24.75	2.06
24" x 24"	51	4.25

ELECTRICAL

Color Temperature (Approximate):
Daylight: 5800°K; Tungsten: 3600°K

Lamp Life: 60,000 hrs

Operating Temperature: -30°C - +85°C

Power: 12V DC Input

www.rosco.com

52 Harbor View Avenue, Stamford, CT 06902 • (203)708-8900 • 1(800)ROSCO NY • Fax: (203)708-8919
1265 Los Angeles Street, Glendale, CA 91204 • (818)543-6700 • 1(800)ROSCO LA • Fax: (818)662-9470
Also in: Toronto, London, Madrid, São Paulo and Sydney

Date: 1/6/2014
Revision: 1/23/2014 Δ1

Peoria Children's Museum • Peoria, IL • 13.500.10 •
Lighting Fixture Schedule

Qnty	Type	Manufacturer Catalog	Luminaire Description	Lamp Code	Lumens	Lamps/ Unit	Volts	Lamp(s) Wattage	Notes	Revision
12	**GA**	BK Lighting- DE-LED-x25-WFL-BLP-9-E + PM1-SM-TRe20-1	Surface mounted adjustable LED accent light with wide flood optic. Finish to be Black	LED by Manufacturer	1005	1	105-300	25	11, 12, 16	
11	**GA-1**	BK Lighting- DE-LED-x25-FL-VER-9-11-E + PM1-SM-TRe20-1	Surface mounted adjustable LED accent light with flood optic. Finish to be Verde.	LED by Manufacturer	918	1	105-300	25	11, 12, 16	
3	**LA**	Fluxwerx- PR2-F-A-A-35-A-04-S-S-M	Surface mounted linear LED wall wash. Finish to be clear anodized	LED by Manufacturer	1800	1	120-277	24	12	
18 *ln. ft.*	**LB**	Aion LED- 3024-27-LE + D40-M-24	LED tape light power supply to be remoted, concealed from view and properly ventilated per manufacturer recommendations.	LED by Manufacturer	137 lm/ft	3/ft	100-277 prim 12-24 sec	1.5w/ft	10, 11	
10	**PA**	Holophane- CIS-42CFL-12-C-1-4-W-3-A-X-C1-Victorian-White	Compact fluorescent, pendant mounted area light.	Osram/Sylvania: CFL42DT/E/IN/830/ECO	3100	1	120-277	42	4, 5, 12, 13, 14, 15	
1	**PB**	Nauset Lantern Shop- Onion Hanging Lantern - Small	Onion shape hanging area light w/ copper finish, clear glass optic, and 2' chain.	TCP: LED5E26B1127KF	300	1	120	5	4, 5, 12, 13, 14,	
13	**PC**	Shades of Light- PE120228 BK	Pendant mounted Chicken wire basket area light with retro fit LED lamp.	Osram/Sylvania: LED20A21/DIM/0/827	1600	1	120	20	4, 5, 12, 13, 14,	
1 *10/unit*	**PD**	Rejuvenation- A0021	Shaded string area lights with frosted retrofit LED lamp	TCP: LED5E12B1127KF	300	10	120	5	4, 5, 12, 13, 14,	
12	**PF**	Progress Lighting- P5036-09	Pendant mounted area light with Brushed Nickel finish and retrofit LED lamp	Osram/Sylvania: LED20A21/DIM/0/827	1600	1	120	20	4, 5, 12, 13, 14,	Δ1
8	**PG**	Progress Lighting- P4406	Pendant mounted area light globe with retrofit LED lamp	Osram/Sylvania: LED20A21/DIM/0/827	1600	1	120	20	4, 5, 12, 13, 14,	Δ1
4	**PH**	Shaper Lighting- 461-A-CFL/1/26-120V-NA-CSJ-54"	Pendant mounted, compact fluorescent area light luminous cylinder.	Osram/Sylvania: CF26DT/E/IN/830/ECO	1800	1	120	26	4, 5, 12, 13, 14, 15	

This Fixture Schedule must be read in conjunction with the Architectural Lighting Specification and data sheets provided

Peoria Children's Museum • Peoria, IL • 13.500.10 •

Lighting Fixture Schedule

Qnty	Type	Manufacturer Catalog	Luminaire Description	Lamp Code	Lumens	Lamps/ Unit	Volts	Lamp(s) Wattage	Notes	Revision
2	**PJ**	Lumetta- P52608-F11-D61-1/14WT T5-120-STM-XX-CF5-LBA2	Pipe line pendant mounted area light. Finish to be White.	Osram/Sylvania: FP14/830/ECO		1	120	14	4, 5, 12, 13, 14, 15	
6	**PK**	Progress Lighting- P5121-16	Pendant mounted deco area light with retrofit LED lamp	Osram/Sylvania: LED20A21/DIM/0/827	1600	1	120	20	4, 5, 12, 13, 14,	
3	**PL**	Peerless Lighting- RD4MS-W40-8'-R8-120-EZB-SCT-LP830-F2/36-CO32-SLP	Pendant mounted direct LED cylindrical area light luminaire	LED by Manufacturer	4550	1	120	60	4, 5, 12, 13, 14,	
4	**PM**	Philips Lightolier- 40471U3TM-409WH-404SKG	Pendant mounted, compact fluorescent area light luminaire with white opal reflector	Osram/Sylvania: CF26DT/E/IN/830/ECO	1800	1	120	26	4, 5, 12, 13, 14, 15	
14	**PP**	Ferguson Craftmade- CZ1117	Pendant mounted lantern for tree accent with brushed copper finish and retrofit 5W medium base blunt tip lamp.	TCP: LED5E26B1127KF	300	1	120	5	4, 5, 12, 13, 14,	Δ1
8	**PQ**	Pathway Lighting- P12C-1/42T-E4-S-CL12	Pendant mounted downlight with acrylic refractor and clear flat acrylic lens. Used with retro fit LED lamp.	Osram/Sylvania: CF26DT/E/IN/830/ECO		1	120	26	4, 5, 12, 13, 14,	Δ1
5	**RA**	Lucifer- DL8ZP-RM-W-X-8007-2 + PS-LEDX-RM-8007-UNIVND	Round, adjustable, recessed LED downlight	LED by Manufacturer	720	1	120-277	14	1, 2, 3, 11, 16	
2	**RB**	Lucifer- DL61ZP-RM-W-X-8007-27-2 + DH-RM-ZF-X-8007-UNIVND	Round, fixed, recessed LED downlight	LED by Manufacturer	720	1	120-277	14	1, 2, 3, 11	
3	**SA**	Rejuvenation- A2219	Surface mounted school house area light luminaire with retrofit LED lamp	Osram/Sylvania: LED20A21/DIM/0/827	1600	1	120	20	12	
1	**SB**	TechniLite Systems- LED Edge 24"x24"-3400K	Luminous LED lit slim sign panel.	LED by Manufacturer					11, 12	
1	**SC**	Hampton Bay- RB169-C4	Surface mounted 4 light directional light bar with retrofit LED lamps	TCP: LED7GU10MR1627KFL	340	1	120	7	6, 7, 11, 12	

This Fixture Schedule must be read in conjunction with the Architectural Lighting Specification and data sheets provided

Peoria Children's Museum • Peoria, IL • 13.500.10 •

Lighting Fixture Schedule

Qnty	Type	Manufacturer Catalog	Luminaire Description	Lamp Code	Lumens	Lamps/ Unit	Volts	Lamp(s) Wattage	Notes	Revision
	SD	Access Lighting- 20296-WH-FST	Surface mounted area light with white finish and retro fit LED lamp. Fixtures to be installed in existing locations on porch 1 for 1. Exact quantity to be determined by Electrical Contractor in the field.	Osram/Sylvania: LED14A19/DIM/0/827	110	1	120	14	6, 7, 11, 12	Δ1
230 ln. ft.	**T**	Philips Lightolier- 6000 Series-Finish to be Aluminum	Single circuit electrified track.	N/A	N/A	N/A	120	N/A	6, 7, 12, 13, 14	
53	**TA**	Philips Lightolier- LLA11-30-AL-RNF	Track mounted LED accent light. Finish to be Aluminum.	LED by Manufacturer	1127	1	120	23	8, 9, 12, 16	
14	**TC**	Altman Lighting- ME3-S-TLA-L-MAPH-G	Track mounted LED pattern projector. Finish to be Silver.	LED by Manufacturer	1200	1	120	25	8, 9, 12, 16	
		10 Rosco 77806	Leaf Breakup Large (e-size)							
		4 Rosco 77448	Clouds Distorted (e-size)							
4	**WA**	Handcrafted Blue Mason Jar Sconce	Mason jar sconce with retrofit LED lamp	TCP: LED5E26B1127KF	300	1	120	5	11, 12	
3	**WB**	iO Lighting- 0-01-C-3K-3K-100-2-0	Surface mounted LED sconce with LED cube accent from bronze finished frame	LED by Manufacturer		1	120	9	11, 12	
9	**WC**	Rosco- 290500030120	Luminous LED panel, with a 3" diameter. Surface mounted within climber.	LED by Manufacturer		1	120	4.5	11, 12	

This Fixture Schedule must be read in conjunction with the Architectural Lighting Specification and data sheets provided

General Notes

A Contractor shall be responsible for final lighting fixture count.

B Contractor shall be responsible for verifying mounting compatibility and plenum clearance of all lighting fixtures.

C Contractor shall notify Owner and Architect of any conflicts with structure, HVAC, or plumbing prior to the ordering of the equipment in question.

D Contractor shall verify that all lighting equipment specified, in its intended application on this project, complies with all applicable national & local codes, ordinances, regulations, and jurisdictions prior to ordering any equipment.

F All fixtures to be supplied with specified lamp(s). Contractor will provide an additional 25% replacement lamps to the Owner, of all specified lamp types, upon completion of the job. Minimum two [2] of each lamp type specified.

G Substitutions of Lighting Designer specified products are strictly prohibited, unless approved, in writing, by the Lighting Designer &/or Architect. Lighting fixture, ballast, lamp &/or accessory substitutions shall be formally presented to the Lighting Designer no later than ten (10) working days prior to bid due date. Contractor shall be responsible for all costs associated with the Lighting Designer's review of potential luminaire substitutions.

H Do not scale electrical drawings for exact location of the lighting fixtures. In general, the architectural reflected ceiling plans indicate the proper locations of lighting fixtures.

J Prior to final aiming and programming, all broken luminiaire parts shall have been replaced and all luminaires shall be operative and programmable.

K At the time of acceptance by the Owner, all lighting fixtures shall have been thoroughly cleaned with materials and methods recommended by the manufacturers.

L The accompanying drawings and all the ideas, arrangements, designs, and plans indicated thereon or represented thereby, are owned by and remain the property of Abernathy Lighting Design, and have been created and developed for use on, and in connection with, the specified project.

M Written dimensions on drawings shall take precedent over scaled measurements. Contractors and manufacturers shall verify and be responsible for all dimensions and conditions on the job and inform Designer of all variations from drawings prior to performing the work.

N Lighting drawings represent visual concepts and suggestions only. Lighting Designer is unqualified to determine their structural or electrical appropriateness and will NOT assume responsibility or liability for improper engineering, construction, installation, or handling, of these design concepts.

P Distributor Net Pricing has been secured for all products specified and is used in the preparation of preliminary opinions of probable cost. A record of specific unit costs has been shared confidentially with the Owner to assist him in analysis of bid submittals.

Q Contractor shall supply "contractor net" unit pricing for each lighting product specified. Unit price shall be for equipment only and not include installation or miscellaneous electrical costs. The unit price supplied shall be guaranteed for the project and valid for additions and deletions of product throughout the duration of the project.

R Within twenty (20) buisness days of contract award, successful Contractor shall submit a complete list of lighting products he intends on furnishing with manufacturer and catalog designations, along with currently quoted lead times for delivery of the same. Should the Contractor anticipate that the delivery schedule of any specified product may adversely impact the construction schedule, he shall bring it to the attention of the Owner at this time.

S Within twenty (20) buisness days of bid award, contractor shall provide a complete list of all lamps which will be furnished on the project. This list shall be organized alphabetically by luminaire types indicated on the luminaire schedule, and include the manufacturer and exact model number of each lamp. Up to three (3) samples of any listed lamp shall be supplied at no additional cost to the project, if so requested by the Specifier.

T Failure to include one of the specified products as a part of the Base Bid may, at the discretion of the Owner, invalidate the entire lighting product bid and exclude the contractor from further consideration.

Specific Notes

8 Light leaks between ceiling trims of recessed lighting equipment and the ceiling plane will NOT be tolerated. If fixture is used in partially transparent ceiling, light leaks above the ceiling line will NOT be tolerated.

2 Reflectors, reflector cones and visible trim of all lighting fixtures shall not be installed until completion of plastering, ceiling tile work, painting and general cleanup.

3 Reflectors, reflector cones and visible trims shall be carefully handled to avoid scratching or fingerprinting and shall be, at the time of acceptance by the Owner, completely clean and without visible damage.

4 Contractor shall be responsible for all materials required to insure a safe and proper pendant installation.

5 Contractor to verify lengths of pendants with Architect prior to final order. See drawings for mounting height information.

6 Track shall be mounted to the ceiling in a manner recommended by the manufacturer and so as not to compromise the integrity of the ceiling or its support structure.

7 Track lengths shall be as shown on architectural reflected ceiling plans. Contractor shall be responsible for all miscellaneous mounting and electrical hardware necessary for proper installation and operation of the track.

8 This luminaire shall not be installed to track until aiming and adjustment takes place, just prior to the Project's completion.

9 Unit to be supplied with the proper track fitting. Contractor to coordinate with Manufacturer.

10 Transformer remoted in a nearby accessible, concealed-from-view location w/ Manufacturer's recommended ventilation. Contractor shall supply manufacturer's standard power supply of appropriate size and capacity as determined from information shown on drawings & verified in the field.

11 Exact track or fixture location to be verified with field conditions and confirmed with Architect and Owner prior to final installation.

12 Final finish of fixture to be approved in writing by Exhibit Designer and Lighting Designer.

13 Junction boxes and conduit that is used to wire fixtures and that is open to view shall be painted to match adjacent structure.

14 Contractor shall supply all above ceiling line bracing necessary to insure a proper and safe installation.

15 This luminaire shall not be operated for work light at any time during construction, nor shall it be illuminated for any other reason. Failure to comply with this requirement will make necessary the relamping of this luminaire with the project specified lamp, by the Contractor, at no additional cost to the Owner.

16 Contractor shall be responsible for final targeting of luminaires under the observation, and according to the recommendations of, the Lighting Designer. The Lighting Designer shall recommend the number of crews required. All aiming and adjusting shall be carried out at the direction of the Lighting Designer. As aiming and adjusting is completed, crews are responsible for tightening all locking set screws, handles, bolts, etc. to insure that luminaire focus is permanently maintained. Contractor shall focus and adjust designated luminaire(s) after dark in spaces with daylight contribution. In spaces without daylight considerations, focus shall be at a time mutually agreeable to the Contractor, Lighting Designer and Owner. Adjustments shall be made in accordance with the Lighting Designer's stated intent and under his/her observation. The aiming and adjustment of the luminaires must take place after the Project's amenities have been completely installed. These amenities shall include, but are not necessarily limited to, plantings, furniture, artwork, graphics and signage. All ladders, scaffolds, lifts, and all other materials required for fixture aiming and adjusting shall be furnished by the Contractor. All costs associated with aiming and focusing shall be included in the base bid.

SECTION 312000 - EARTH MOVING

PART 1 - GENERAL

1.1 SUMMARY

A. Section Includes:
   1. Excavating and filling for rough grading the Site.
   2. Preparing subgrades for slabs-on-grade, walks, turf and grasses.
   3. Excavating and backfilling for buildings and structures.
   4. Drainage course for concrete slabs-on-grade.
   5. Subbase course for concrete walks.
   6. Excavating and backfilling trenches for utilities and pits for buried utility structures.

1.2 DEFINITIONS

A. Backfill: Soil material used to fill an excavation.
   1. Initial Backfill: Backfill placed beside and over pipe in a trench, including haunches to support sides of pipe.
   2. Final Backfill: Backfill placed over initial backfill to fill a trench.

B. Base Course: Aggregate layer placed between the subbase course and hot-mix asphalt paving.

C. Bedding Course: Aggregate layer placed over the excavated subgrade in a trench before laying pipe.

D. Borrow Soil: Satisfactory soil imported from off-site for use as fill or backfill.

E. Drainage Course: Aggregate layer supporting the slab-on-grade that also minimizes upward capillary flow of pore water.

F. Excavation: Removal of material encountered above subgrade elevations and to lines and dimensions indicated.
   1. Authorized Additional Excavation: Excavation below subgrade elevations or beyond indicated lines and dimensions as directed by Architect. Authorized additional excavation and replacement material will be paid for according to Contract provisions for changes in the Work.
   2. Unauthorized Excavation: Excavation below subgrade elevations or beyond indicated lines and dimensions without direction by Architect. Unauthorized excavation, as well as remedial work directed by Architect, shall be without additional compensation.

G. Fill: Soil materials used to raise existing grades.

H. Structures: Buildings, footings, foundations, retaining walls, slabs, tanks, curbs, mechanical and electrical appurtenances, or other man-made stationary features constructed above or below the ground surface.

I. Subbase Course: Aggregate layer placed between the subgrade and base course for hot-mix asphalt pavement, or aggregate layer placed between the subgrade and a cement concrete pavement or a cement concrete or hot-mix asphalt walk.

J. Subgrade: Uppermost surface of an excavation or the top surface of a fill or backfill immediately below subbase, drainage fill, drainage course, or topsoil materials.

K. Utilities: On-site underground pipes, conduits, ducts, and cables as well as underground services within buildings.

1.3 INFORMATIONAL SUBMITTALS

A. Material test reports.

1.4 FIELD CONDITIONS

A. Utility Locator Service: Notify utility locator service for area where Project is located before beginning earth-moving operations.

PART 2 - PRODUCTS

2.1 SOIL MATERIALS

A. General: Provide borrow soil materials when sufficient satisfactory soil materials are not available from excavations.

B. Satisfactory Soils: Soil Classification Groups GW, GP, GM, SW, SP, and SM according to ASTM D 2487, or a combination of these groups; free of rock or gravel larger than 3 inches in any dimension, debris, waste, frozen materials, vegetation, and other deleterious matter.

C. Unsatisfactory Soils: Soil Classification Groups GC, SC, CL, ML, OL, CH, MH, OH, and PT according to ASTM D 2487, or a combination of these groups.
   1. Unsatisfactory soils also include satisfactory soils not maintained within 2 percent of optimum moisture content at time of compaction.

D. Subbase Material: Naturally or artificially graded mixture of natural or crushed gravel, crushed stone, and natural or crushed sand; ASTM D 2940/D 2940M; with at least 90 percent passing a 1-1/2-inch sieve and not more than 12 percent passing a No. 200 sieve.

E. Base Course: Naturally or artificially graded mixture of natural or crushed gravel, crushed stone, and natural or crushed sand; ASTM D 294/D 2940M 0; with at least 95 percent passing a 1-1/2-inch sieve and not more than 8 percent passing a No. 200 sieve.

F. Engineered Fill: Naturally or artificially graded mixture of natural or crushed gravel, crushed stone, and natural or crushed sand; ASTM D 2940/D 2940M; with at least 90 percent passing a 1-1/2-inch sieve and not more than 12 percent passing a No. 200 sieve.

G. Bedding Course: Naturally or artificially graded mixture of natural or crushed gravel, crushed stone, and natural or crushed sand; ASTM D 2940/D 2940M; except with 100 percent passing a 1-inch sieve and not more than 8 percent passing a No. 200 sieve.

H. Drainage Course: Narrowly graded mixture of washed crushed stone, or crushed or uncrushed gravel; ASTM D 448; coarse-aggregate grading Size 57; with 100 percent passing a 1-1/2-inch sieve and zero to 5 percent passing a No. 8 sieve.

2.2 CONTROLLED LOW-STRENGTH MATERIAL

A. Controlled Low-Strength Material: Self-compacting, flowable concrete material produced from the following:
1. Portland Cement: ASTM C 150, Type I.
2. Fly Ash: ASTM C 618, Class C or F.
3. Normal-Weight Aggregate: ASTM C 33, 3/4-inch nominal maximum aggregate size.
4. Water: ASTM C 94/C 94M.
5. Air-Entraining Admixture: ASTM C 260.

B. Produce conventional-weight, controlled low-strength material with 140-psi compressive strength when tested according to ASTM C 495.

2.3 ACCESSORIES

A. Warning Tape: Acid- and alkali-resistant, polyethylene film warning tape manufactured for marking and identifying underground utilities, 6 inches wide and 4 mils thick, continuously inscribed with a description of the utility; colored to comply with local practice or requirements of authorities having jurisdiction.

B. Detectable Warning Tape: Acid- and alkali-resistant, polyethylene film warning tape manufactured for marking and identifying underground utilities, a minimum of 6 inches wide and 4 mils thick, continuously inscribed with a description of the utility, with metallic core encased in a protective jacket for corrosion protection, detectable by metal detector when tape is buried up to 30 inches deep; colored to comply with local practice or requirements of authorities having jurisdiction.

PART 3 - EXECUTION

3.1 PREPARATION

A. Protect structures, utilities, sidewalks, pavements, and other facilities from damage caused by settlement, lateral movement, undermining, washout, and other hazards created by earth-moving operations.

B. Protect and maintain erosion and sedimentation controls during earth-moving operations.

C. Protect subgrades and foundation soils from freezing temperatures and frost. Remove temporary protection before placing subsequent materials.

3.2 DEWATERING

A. Prevent surface water and ground water from entering excavations, from ponding on prepared subgrades, and from flooding Project site and surrounding area.

B. Protect subgrades from softening, undermining, washout, and damage by rain or water accumulation.
   1. Reroute surface water runoff away from excavated areas. Do not allow water to accumulate in excavations. Do not use excavated trenches as temporary drainage ditches.

3.3 EXCAVATION, GENERAL

A. Unclassified Excavation: Excavate to subgrade elevations regardless of the character of surface and subsurface conditions encountered. Unclassified excavated materials may include rock, soil materials, and obstructions. No changes in the Contract Sum or the Contract Time will be authorized for rock excavation or removal of obstructions.
   1. If excavated materials intended for fill and backfill include unsatisfactory soil materials and rock, replace with satisfactory soil materials.

3.4 EXCAVATION FOR STRUCTURES

A. Excavate to indicated elevations and dimensions within a tolerance of plus or minus 1 inch. If applicable, extend excavations a sufficient distance from structures for placing and removing concrete formwork, for installing services and other construction, and for inspections.
   1. Excavations for Footings and Foundations: Do not disturb bottom of excavation. Excavate by hand to final grade just before placing concrete reinforcement. Trim bottoms to required lines and grades to leave solid base to receive other work.
   2. Pile Foundations: Stop excavations 6 to 12 inches above bottom of pile cap before piles are placed. After piles have been driven, remove loose and displaced material. Excavate to final grade, leaving solid base to receive concrete pile caps.
   3. Excavation for Underground Tanks, Basins, and Mechanical or Electrical Utility Structures: Excavate to elevations and dimensions indicated within a tolerance of plus or minus 1 inch. Do not disturb bottom of excavations intended as bearing surfaces.

B. Excavations at Edges of Tree- and Plant-Protection Zones:
   1. Excavate by hand or with an air spade to indicated lines, cross sections, elevations, and subgrades. If excavating by hand, use narrow-tine spading forks to comb soil and expose roots. Do not break, tear, or chop exposed roots. Do not use mechanical equipment that rips, tears, or pulls roots.
   2. Cut and protect roots.

3.5 EXCAVATION FOR WALKS AND PAVEMENTS

A. Excavate surfaces under walks and pavements to indicated lines, cross sections, elevations, and subgrades.

3.6 EXCAVATION FOR UTILITY TRENCHES

A. Excavate trenches to indicated gradients, lines, depths, and elevations.

B. Excavate trenches to uniform widths to provide the following clearance on each side of pipe or conduit. Excavate trench walls vertically from trench bottom to 12 inches higher than top of pipe or conduit unless otherwise indicated.
   1. Clearance: 12 inches each side of pipe or conduit minimum or as indicated.

C. Trench Bottoms: Excavate and shape trench bottoms to provide uniform bearing and support of pipes and conduit. Shape subgrade to provide continuous support for bells, joints, and barrels of pipes and for joints, fittings, and bodies of conduits. Remove projecting stones and sharp objects along trench subgrade.
   1. Excavate trenches 6 inches deeper than elevation required in rock or other unyielding bearing material to allow for bedding course.

D. Trenches in Tree- and Plant-Protection Zones:
   1. Hand-excavate to indicated lines, cross sections, elevations, and subgrades. Use narrow-tine spading forks to comb soil and expose roots. Do not break, tear, or chop exposed roots. Do not use mechanical equipment that rips, tears, or pulls roots.
   2. Do not cut main lateral roots or taproots; cut only smaller roots that interfere with installation of utilities.
   3. Cut and protect roots.

3.7 SUBGRADE INSPECTION

A. Proof-roll subgrade below the building slabs and pavements with a pneumatic-tired dump truck to identify soft pockets and areas of excess yielding. Do not proof-roll wet or saturated subgrades.

B. Reconstruct subgrades damaged by freezing temperatures, frost, rain, accumulated water, or construction activities, as directed by Architect, without additional compensation.

3.8 UNAUTHORIZED EXCAVATION

A. Fill unauthorized excavation under foundations or wall footings by extending bottom elevation of concrete foundation or footing to excavation bottom, without altering top elevation. Lean concrete fill, with 28-day compressive strength of 2500 psi, may be used when approved by Architect.
   1. Fill unauthorized excavations under other construction, pipe, or conduit as directed by Architect.

3.9 STORAGE OF SOIL MATERIALS

A. Stockpile borrow soil materials and excavated satisfactory soil materials without intermixing. Place, grade, and shape stockpiles to drain surface water. Cover to prevent windblown dust.
   1. Stockpile soil materials away from edge of excavations. Do not store within drip line of remaining trees.

3.10 UTILITY TRENCH BACKFILL

A. Place backfill on subgrades free of mud, frost, snow, or ice.

B. Place and compact bedding course on trench bottoms and where indicated. Shape bedding course to provide continuous support for bells, joints, and barrels of pipes and for joints, fittings, and bodies of conduits.

C. Trenches under Footings: Backfill trenches excavated under footings and within 18 inches of bottom of footings with satisfactory soil; fill with concrete to elevation of bottom of footings. Concrete is specified in Section 033000 "Cast-in-Place Concrete”.

D. Initial Backfill: Place and compact initial backfill of subbase material, free of particles larger than 1 inch in any dimension, to a height of 12 inches over the pipe or conduit.
   1. Carefully compact initial backfill under pipe haunches and compact evenly up on both sides and along the full length of piping or conduit to avoid damage or displacement of piping or conduit. Coordinate backfilling with utilities testing.

E. Final Backfill: Place and compact final backfill of satisfactory soil to final subgrade elevation.

F. Warning Tape: Install warning tape directly above utilities, 12 inches below finished grade, except 6 inches below subgrade under pavements and slabs.

3.11 SOIL FILL

A. Plow, scarify, bench, or break up sloped surfaces steeper than 1 vertical to 4 horizontal so fill material will bond with existing material.

B. Place and compact fill material in layers to required elevations as follows:
   1. Under grass and planted areas, use satisfactory soil material.
   2. Under walks and pavements, use satisfactory soil material, U.O.N.
   3. Under steps and ramps, use engineered fill.
   4. Under building slabs, use engineered fill.
   5. Under footings and foundations, use engineered fill.

3.12 SOIL MOISTURE CONTROL

A. Uniformly moisten or aerate subgrade and each subsequent fill or backfill soil layer before compaction to within 2 percent of optimum moisture content.

1. Do not place backfill or fill soil material on surfaces that are muddy, frozen, or contain frost or ice.
2. Remove and replace, or scarify and air dry, otherwise satisfactory soil material that exceeds optimum moisture content by 2 percent and is too wet to compact to specified dry unit weight.

3.13 COMPACTION OF SOIL BACKFILLS AND FILLS

A. Place backfill and fill soil materials in layers not more than 8 inches in loose depth for material compacted by heavy compaction equipment and not more than 4 inches in loose depth for material compacted by hand-operated tampers.

B. Place backfill and fill soil materials evenly on all sides of structures to required elevations and uniformly along the full length of each structure.

C. Compact soil materials to not less than the following percentages of maximum dry unit weight according to ASTM D 698:
1. Under structures, building slabs, steps, and pavements, scarify and recompact top 12 inches of existing subgrade and each layer of backfill or fill soil material at 95 percent.
2. Under walkways, scarify and recompact top 6 inches below subgrade and compact each layer of backfill or fill soil material at 92 percent.
3. Under turf or unpaved areas, scarify and recompact top 6 inches below subgrade and compact each layer of backfill or fill soil material at 85 percent.
4. For utility trenches, compact each layer of initial and final backfill soil material at 85 percent.

3.14 GRADING

A. General: Uniformly grade areas to a smooth surface, free of irregular surface changes. Comply with compaction requirements and grade to cross sections, lines, and elevations indicated.

B. Site Rough Grading: Slope grades to direct water away from buildings and to prevent ponding. Finish subgrades to elevations required to achieve indicated finish elevations, within the following subgrade tolerances:
1. Turf or Unpaved Areas: Plus or minus 1 inch.
2. Walks: Plus or minus 1 inch.

C. Grading inside Building Lines: Finish subgrade to a tolerance of 1/2 inch when tested with a 10-foot straightedge.

3.15 SUBBASE AND BASE COURSES UNDER PAVEMENTS AND WALKS

A. Place subbase course and base course on subgrades free of mud, frost, snow, or ice.

B. On prepared subgrade, place subbase course and base course under pavements and walks as follows:

1. Shape subbase course and base course to required crown elevations and cross-slope grades.
2. Place subbase course and base course that exceeds 6 inches in compacted thickness in layers of equal thickness, with no compacted layer more than 6 inches thick or less than 3 inches thick.
3. Compact subbase course and base course at optimum moisture content to required grades, lines, cross sections, and thickness to not less than 95 percent of maximum dry unit weight according to ASTM D 698.

3.16 DRAINAGE COURSE UNDER CONCRETE SLABS-ON-GRADE

A. Place drainage course on subgrades free of mud, frost, snow, or ice.

B. On prepared subgrade, place and compact drainage course under cast-in-place concrete slabs-on-grade as follows:
1. Place drainage course that exceeds 6 inches in compacted thickness in layers of equal thickness, with no compacted layer more than 6 inches thick or less than 3 inches thick.
2. Compact each layer of drainage course to required cross sections and thicknesses to not less than 95 percent of maximum dry unit weight according to ASTM D 698.

3.17 FIELD QUALITY CONTROL

A. Special Inspections: Engage a qualified special inspector to perform inspections:

B. Testing Agency: Engage a qualified geotechnical engineering testing agency to perform tests and inspections.

C. Allow testing agency to inspect and test subgrades and each fill or backfill layer. Proceed with subsequent earth moving only after test results for previously completed work comply with requirements.

D. Footing Subgrade: At footing subgrades, at least one test of each soil stratum will be performed to verify design bearing capacities. Subsequent verification and approval of other footing subgrades may be based on a visual comparison of subgrade with tested subgrade when approved by Architect.

E. When testing agency reports that subgrades, fills, or backfills have not achieved degree of compaction specified, scarify and moisten or aerate, or remove and replace soil materials to depth required; recompact and retest until specified compaction is obtained.

3.18 PROTECTION

A. Protecting Graded Areas: Protect newly graded areas from traffic, freezing, and erosion. Keep free of trash and debris.

B. Repair and reestablish grades to specified tolerances where completed or partially completed surfaces become eroded, rutted, settled, or where they lose compaction due to subsequent construction operations or weather conditions.

C. Where settling occurs before Project correction period elapses, remove finished surfacing, backfill with additional soil material, compact, and reconstruct surfacing.
   1. Restore appearance, quality, and condition of finished surfacing to match adjacent work, and eliminate evidence of restoration to greatest extent possible.

3.19 DISPOSAL OF SURPLUS AND WASTE MATERIALS

A. Remove surplus satisfactory soil and waste materials, including unsatisfactory soil, trash, and debris, and legally dispose of them off Owner's property.

END OF SECTION 312000

ATTACHMENT A.6
INSURANCE REQUIREMENTS
ROUTINE CONSTRUCTION, MAINTENANCE AND REPAIR PROJECTS

Contractor shall obtain insurance of the types and in the amounts listed below.

A. COMMERCIAL GENERAL AND UMBRELLA LIABILITY INSURANCE

Contractor shall maintain commercial general liability (CGL) and, if necessary, commercial umbrella insurance with a limit of not less than $1,000,000 each occurrence. If such CGL insurance contains a general aggregate limit, it shall apply separately to this project/location.

CGL insurance shall be written on Insurance Services Office (ISO) occurrence form CG 00 01 10 93, or a substitute form providing equivalent coverage, and shall cover liability arising from premises, operations, independent contractors, products-completed operations, personal injury and advertising injury, and liability assumed under an insured contract (including the tort liability of another assumed in a business contract).

Owner shall be included as an insured under the CGL, using ISO additional insured endorsement CG 20 10 or a substitute providing equivalent coverage, and under the commercial umbrella, if any. This insurance shall apply as primary insurance with respect to any other insurance or self-insurance afforded to Owner.

There shall be no endorsement or modification of the CGL limiting the scope of coverage for liability arising from pollution, explosion, collapse, or underground property damage.

B. CONTINUING COMPLETED OPERATIONS LIABILITY INSURANCE

Contractor shall maintain commercial general liability (CGL) and, if necessary, commercial umbrella liability insurance with a limit of not less than $1,000,000 each occurrence for at least one (1) year following substantial completion of the work.

Continuing CGL insurance shall be written on ISO occurrence form CG 00 01 10 93, or substitute form providing equivalent coverage, and shall, at minimum, cover liability arising from products-completed operations and liability assumed under an insured contract.

Continuing CGL insurance shall have a products-completed operations aggregate of at least two times its each occurrence limit.

Continuing commercial umbrella coverage, if any, shall include liability coverage for damage to the insured's completed work equivalent to that provided under ISO form CG 00 01.

C. BUSINESS AUTO AND UMBRELLA LIABILITY INSURANCE

Contractor shall maintain business auto liability and, if necessary, commercial umbrella liability insurance with a limit of not less than $1,000,000 each accident. Such insurance shall cover liability arising out of any auto including owned, hired and non-owned autos.

Business auto insurance shall be written on Insurance Services Office (ISO) form CA 00 01, CA 00 05, CA 00 12, CA 00 20, or a substitute form providing equivalent liability coverage. If necessary, the policy shall be endorsed to provide contractual liability coverage equivalent to that provided in the 1990 and later editions of CA 00 01.

D. WORKERS COMPENSATION INSURANCE

Contractor shall maintain workers compensation as required by statute and employers liability insurance. The commercial umbrella and/or employers liability limits shall not be less than $1,000,000 each accident for bodily injury by accident or $1,000,000 each employee for bodily injury by disease.

If Owner has not been included as an insured under the CGL using ISO additional insured endorsement CG 20 10 under the Commercial General and Umbrella Liability Insurance required in this Contract, the Contractor waives all rights against Owner and its officers, officials, employees, volunteers and agents for recovery of damages arising out of or incident to the Contractor's work.

E. GENERAL INSURANCE PROVISIONS

1. **Evidence of Insurance.** Prior to beginning work, Contractor shall furnish Owner with a certificate(s) of insurance and applicable policy endorsement(s), executed by a duly authorized representative of each insurer, showing compliance with the insurance requirements set forth above.

   All certificates shall provide for 30 days written notice to Owner prior to the cancellation or material change of any insurance referred to therein. Written notice to Owner shall be by certified mail, return receipt requested.

   Failure of Owner to demand such certificate, endorsement or other evidence of full compliance with these insurance requirements or failure of Owner to identify a deficiency from evidence that is provided shall not be construed as a waiver of Contractor's obligation to maintain such insurance.

   Owner shall have the right, but not the obligation, of prohibiting Contractor or any subcontractor from entering the project site until such certificates or other evidence that insurance has been placed in complete compliance with these requirements is received and approved by Owner.

   Failure to maintain the required insurance may result in termination of this Contract at Owner's option.

   With respect to insurance maintained after final payment in compliance with a requirement above, an additional certificate(s) evidencing such coverage shall be promptly provided to Owner whenever requested.

   Contractor shall provide certified copies of all insurance policies required above within 10 days of Owner's written request for said copies.

2. **Acceptability of Insurers.** For insurance companies which obtain a rating from A.M. Best, that rating should be no less than A VII using the most recent edition of the A.M. Best's Key Rating Guide. If the Best's rating is less than A VII or a Best's rating is not obtained, the Owner has the right to reject insurance written by an insurer it deems unacceptable.

3. **Cross-Liability Coverage.** If Contractor's liability policies do not contain the standard ISO separation of insureds provision, or a substantially similar clause, they shall be endorsed to provide cross-liability coverage.

4. **Deductibles and Self-Insured Retentions.** Any deductibles or self-insured retentions must be declared to the Owner. At the option of the Owner, the Contractor may be asked to eliminate such deductibles or self insured retentions as respects the Owner, its officers, officials, employees, volunteers and agents or required to procure a bond guaranteeing payment of losses and other related costs including but not limited to investigations, claim administration and defense expenses.

5. **Subcontractors.** Contractor shall cause each subcontractor employed by Contractor to purchase and maintain insurance of the type specified above. When requested by the Owner, Contractor shall furnish copies of certificates of insurance evidencing coverage for each subcontractor.

F. INDEMNIFICATION

To the fullest extent permitted by law, the Contractor shall indemnify and hold harmless the Owner and the Architect and their officers, officials, employees, volunteers and agents from and against all claims, damages, losses and expenses including but not limited legal fees (attorney's and paralegal's fees and court costs), arising

out of or resulting from the performance of the Contractor's work, provided that any such claim, damage, loss or expense (1) is attributable to bodily injury, sickness, disease or death, or injury to or destruction of tangible property, other than the work itself, including the loss of use resulting therefrom and (2) is caused in whole or I part by any wrongful or negligent act or omission of the Contractor, any Subcontractor, anyone directly or indirectly employed by any of them or anyone for whose acts any of them may be liable, except to the extent it is caused in part by a party indemnified hereunder. Such obligation shall not be construed to negate, abridge, or otherwise reduce any other right or obligation of indemnity which would otherwise exist as to any party or person described in this Paragraph. Contractor shall similarly protect, indemnify and hold and save harmless the Owner, its officers, officials, employees, volunteers and agents against and from any and all claims, costs, causes, actions and expenses including but not limited to legal fees, incurred by reason of Contractor's breach of any of its obligations under, or Contractor's default of, any provision of the Contract.

SAMPLE LIABILITY INSURANCE ENDORSEMENT

The following spaces preceded by an asterisk (*) need not be completed if this endorsement and policy have the same inception date.

ATTACHED TO AND FORMING PART OF POLICY NUMBER	*EFFECTIVE DATE OF ENDORSEMENT	*ISSUED TO

This endorsement changes the policy. Please read it carefully.

AUTOMATIC ADDITIONAL INSUREDS

The following provision is added to (SECTION II), Who Is An Insured.

5. Any entity you are required in a written contract (hereinafter called Additional Insured) to name as an insured is an insured but only with respect to liability arising out of your premises, "your work" for the Additional Insured, or acts or omissions of the Additional Insured in connection with the general supervision of "your work" to the extent set forth below.

a. The Limits of Insurance provided on behalf of the Additional Insured are not greater than those required by such contract.

b. The coverage provided to the Additional Insured(s) is not greater than that customarily provided by the policy forms specified in and required by the contract.

c. All insuring agreements, exclusions and conditions of this policy apply.

d. In no event shall the coverages or Limits of Insurance in this Coverage Form be increased by such contract.

Except when required otherwise by contract, this insurance does not apply to:

1) "Bodily injury" or "property damage" occurring after

a) All work on the project (other than service, maintenance or repairs) to be performed by or on behalf of the Additional Insured(s) at the site of the covered operations has been completed; or

b) That portion of "your work" out of which the injury or damage arises has been put to its intended use by any person or organization other than another contractor or subcontractor engaged in performing operations for a principal as a part of the same project.

2) "Bodily injury" or "property damage" arising out of any act or omission of the Additional Insured(s) or any of their employees, other than the general supervision of work performed for the Additional Insured(s) by you.

3) "Property damage" to

a) Property owned, used or occupied by or rented to the Additional Insured(s);

b) Property in the care, custody or control of the Additional Insured(s) or over which the Additional Insured(s) is for any purpose exercising physical control; or

c) “Your work” for the Additional Insured(s).

With respect to Additional Insureds who are architects, engineers or surveyors, this insurance does not apply “bodily injury”, “property damage”, “personal injury” or “advertising injury” arising out of the rendering of or the failure to render any professional services by or for you, including:

a) The preparing, approving, or failing to prepare or approve maps, drawings, opinions, reports, surveys, change orders, designs or specifications; and

b) Supervisory, inspection or engineering services.

Any coverages provided hereunder shall be excess over any other valid and collectible insurance available to the Additional Insured(s) whether primary, excess, contingent or on any other basis unless a contract specifically requires that this insurance be primary or you request that it apply on a primary basis.

No person or organization is an Additional Insured with respect to the conduct of any current or past partnership or joint venture that is not shown as a Named Insured in the Declarations.

END OF ATTACHMENT A.6

Peoria PlayHouse Children's Museum

Bidding Documents

Glen Oak Park
2218 N. Prospect Rd.
Peoria, IL 61603

OWNER PROJECT #04040
A/E PROJECT #24905.02

DATE:
19 March 2014

Owner:

Peoria Park District
1125 West Lake
Peoria, Illinois 61614

Architect/Mechanical/Engineer:

apaceDesign architects + engineers
2112 E. War Memorial Drive
Peoria, Illinois 61614
Ph. 309.685.4722
Fax 309.685.4784

Structural Consultant:

Hanson Professional Services Inc.
7625 N. University St., Ste. 200
Peoria, Illinois 61614
Ph. 309.691.0902
Fax. 309.691.1327

Electrical Engineer:

Keith Engineering Design Inc.
208 S. First Avenue
Morton, IL 61550
Ph. 309.938.4005
Fax.309.263.5657

Exhibit Designer

Jack Rouse and Associates
600 Vine Street, Suite 1700
Cincinnati, Ohio 45202
Ph. 513.381.0055
Fax. 513.381.2691

INDEX OF DRAWINGS:

G000 - TITLE SHEET

S001 - STRUCTURAL GENERAL NOTES
S101 - FOUNDATION PLAN
S201 - LEVEL 2 FRAMING PLAN
S202 - LEVEL 3 FRAMING PLAN
S203 - UPPER CEILING FRAMING PLAN
S301 - FOUNDATION DETAILS
S401 - FRAMING DETAILS
S402 - FRAMING DETAILS

A000 - ROOM FINISH SCHEDULE
A001 - WALL TYPES, SCHEDULES, AND DETAILS
A100 - EXISTING/DEMOLITION LEVEL 1 FLOOR PLAN
A101 - EXISTING/DEMOLITION LEVEL 2 FLOOR PLAN
A102 - EXISTING/DEMOLITION LEVEL 3 FLOOR PLAN
A103 - REVISED LEVEL 1 FLOOR PLAN
A104 - REVISED LEVEL 2 FLOOR PLAN
A105 - REVISED LEVEL 3 FLOOR PLAN
A106 - PARTIAL PLANS
A107 - INSULATION LOCATION PLANS
A200 - EXISTING/REVISED PARTIAL BUILDING ELEVATIONS
A201 - INTERIOR ELEVATIONS
A300 - EXISTING/REVISED BUILDING SECTION
A301 - EXISTING/REVISED BUILDING SECTION
A302 - EXISTING/REVISED PARTIAL SECTIONS
A303 - EXISTING/REVISED PARTIAL SECTIONS
A304 - EXISTING/REVISED PARTIAL SECTIONS/ELEVATIONS
A305 - RAMP SECTIONS AND ELEVATIONS (ALT. BID NO. 4)
A400 - REVISED LEVEL 1 REFLECTED CEILING PLAN
A401 - REVISED LEVEL 2 REFLECTED CEILING PLAN
A402 - REVISED LEVEL 3 REFLECTED CEILING PLAN
A500 - DETAILS
A600 - INTERIOR CASEWORK AND ELEVATIONS
A601 - RESTROOM ELEVATIONS AND DETAILS

IF100 - REVISED LEVEL 1 INTERIOR FINISHES PLAN
IF101 - REVISED LEVEL 2 INTERIOR FINISHES PLAN
IF102 - REVISED LEVEL 3 INTERIOR FINISHES PLAN

FP100 - FIRE SPRINKLER LEVEL 1
FP101 - FIRE SPRINKLER LEVEL 2
FP102 - FIRE SPRINKLER LEVEL 3 AND ATTIC PLAN
FP200 - EXISTING/REVISED BUILDING SECTION
FP201 - EXISTING/REVISED BUILDING SECTION

P000 - REVISED UNDER FLOOR LEVEL 1 PLUMBING PLAN
P100 - REVISED ABOVE FLOOR LEVEL 1 PLUMBING PLAN
P101 - REVISED ABOVE FLOOR LEVEL 2 PLUMBING PLAN
P102 - REVISED ABOVE FLOOR LEVEL 3 PLUMBING PLAN
P200 - PARTIAL SITE PLAN & DETAILS
P300 - EXISTING/DEMOLITION LEVEL 1 PLUMBING PLAN
P301 - EXISTING/DEMOLITION LEVEL 2 PLUMBING PLAN
P302 - EXISTING/DEMOLITION LEVEL 3 PLUMBING PLAN

H100 - REVISED LEVEL 1 HVAC PLANS
H101 - REVISED LEVEL 2 HVAC PLANS
H102 - REVISED LEVEL 3 HVAC PLANS
H200 - HVAC SCHEDULES AND DETAILS
H201 - HVAC SECTIONS
H202 - HVAC SECTIONS
H300 - EXISTING/DEMOLITION LEVEL 1 HVAC PLAN
H301 - EXISTING/DEMOLITION LEVEL 2 HVAC PLAN
H302 - EXISTING/DEMOLITION LEVEL 3 HVAC PLAN

E001 - SITE PLAN
E101 - LEVEL 1 ELECTRICAL DEMOLITION
E102 - LEVEL 2 ELECTRICAL DEMOLITION
E103 - LEVEL 3 ELECTRICAL DEMOLITION
E111 - LEVEL 1 ELECTRICAL PLAN - LIGHTING
E112 - LEVEL 2 ELECTRICAL PLAN - LIGHTING
E113 - LEVEL 3 ELECTRICAL PLAN - LIGHTING
E121 - LEVEL 1 ELECTRICAL PLAN - POWER
E122 - LEVEL 2 ELECTRICAL PLAN - POWER
E123 - LEVEL 3 ELECTRICAL PLAN - POWER
E131 - LEVEL 1 ELECTRICAL PLAN - SYSTEMS
E132 - LEVEL 2 ELECTRICAL PLAN - SYSTEMS
E133 - LEVEL 3 ELECTRICAL PLAN - SYSTEMS
E200 - ONE-LINE & RISER
E201 - PANEL SCHEDS.
E300 - FIRE ALARM SCHEDULES, RISER, AND DETAILS
E301 - TELE DATA SPECIFICATIONS AND DETAILS
E302 - TELE DATA SCHEDULE AND RISER DIAGRAM
E303 - LIGHTING CONTROL SCHEDULE, DETAILS, AND DIAGRAMS
E400 - ELECTRICAL DETAILS
E500 - LIGHTING FIXTURE SCHEDULE & NOTES
E501 - MATERIAL SCHEDULE & NOTES

LL-101 - LEVEL 1 LIGHTING LAYOUT
LL-102 - LEVEL 2 LIGHTING LAYOUT
LL-103 - LEVEL 3 LIGHTING LAYOUT

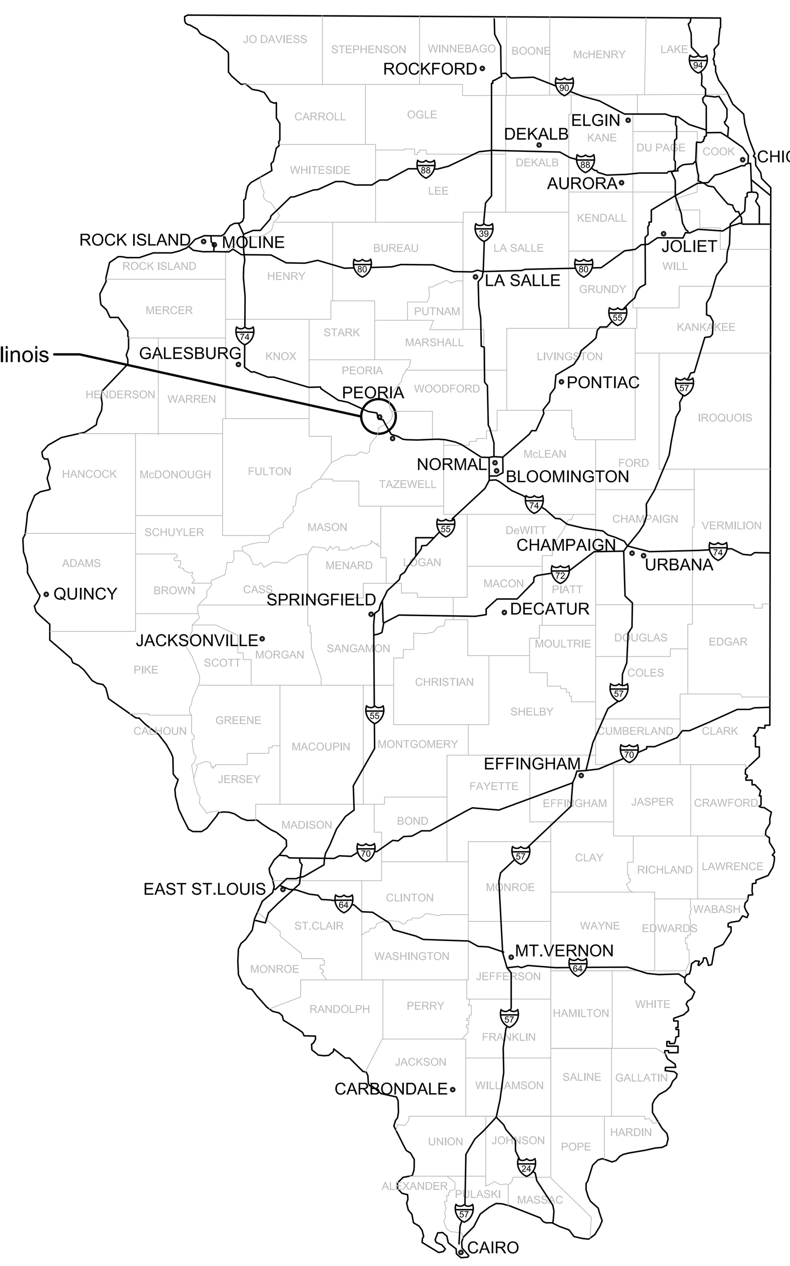

Location in State
NO SCALE

Location of Peoria PlayHouse Children's Museum

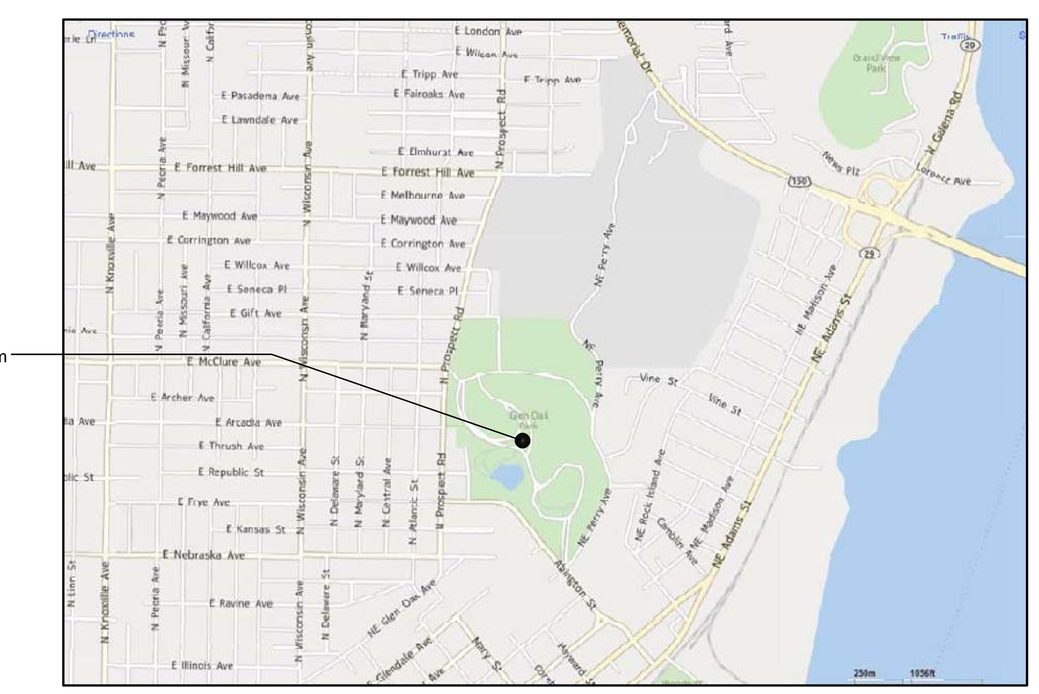

Location in City
NO SCALE

STATE OF ILLINOIS
#001.020403
BEN L.
KAUFFMAN
LICENSED ARCHITECT
EXPIRES 11.30.14
A, IF SHEETS ONLY

STATE OF ILLINOIS
THOMAS N.
DEJARLD
81-4730
LICENSED STRUCTURAL ENGINEER
EXPIRES 11.30.14
S-SHEETS ONLY

MARK A. CORDES
062-039301
REGISTERED
PROFESSIONAL
ENGINEER
OF
ILLINOIS
EXPIRES 11.30.15
FP, P, H SHEETS ONLY

LICENSED PROFESSIONAL ENGINEER
BRIAN R.
KEITH
062-050306
STATE OF ILLINOIS
EXPIRES 11.30.15
E SHEETS ONLY

ABBREVIATIONS:

ADA	AMERICANS WITH DISABILITIES ACT	MANUF	MANUFACTURE (R)
A.F.F.	ABOVE FINISHED FLOOR	MAS.	MASONRY
ALT.	ALTERNATE	MAX	MAXIMUM
ALUM	ALUMINUM	M.B.	MARKERBOARD
APPROX	APPROXIMATE	MECH	MECHANICAL
ARCH	ARCHITECT (URAL)	MISC	MISCELLANEOUS
BRNG.	BEARING	MIN	MINIMUM
BLKNG	BLOCKING	MISC	MISCELLANEOUS
BD	BOARD	MTL OR MET	METAL
BLDG	BUILDING	MNTD.	MOUNTED
B.O.	BY OWNER	NO	NUMBER
℄	CENTER LINE	NIC	NOT IN CONTRACT
C/C.	CENTER TO CENTER	OC	ON CENTER
C.R.	CLASSROOM	OPNG	OPENING
CLNG	CEILING	OPP	OPPOSITE
CLR	CLEAR (ANCE)	OD	OUTSIDE DIAMETER
CMU	CONCRETE MASONRY UNIT	O.S.B.	ORIENTED STRAND BOARD
COL(S)	COLUMN(S)	P.LAM	PLASTIC LAMINATE
COMP	COMPRESS (IBLE), COMPACTED	PLUMB.	PLUMBING
CONC	CONCRETE	PLYWD	PLYWOOD
CONSTR	CONSTRUCTION	PNT. OR PT	PAINT
CONT	CONTINUOUS	P.C.	PORTLAND CEMENT
COORD.	COORDINATE	RAD	RADIUS
CPT.	CARPET	REINF	REINFORCE (D), (ING)
CT.	CERAMIC TILE	REQ'D	REQUIRED
DBL	DOUBLE	REF	REFERENCE
DP.	DEEP	RB	RESILIENT BASE
DEMO	DEMOLITION	RM	ROOM
DET	DETAIL	R.T.U.	ROOF TOP UNIT
DIA	DIAMETER	SCHED	SCHEDULE (D)
DIAG	DIAGONAL	SLNT	SEALANT
DIM	DIMENSION	SF	SQUARE FEET
DR. (S)	DOOR (S)	SHT	SHEET
D.S.	DOWNSPOUT	SIM	SIMILAR
EA	EACH	S.C.WD	SOLID CORE WOOD
E.F.	EXHAUST FAN	SPEC	SPECIFICATION (S)
EIFS	EXTERIOR INSULATION FINISH SYSTEM	SQ	SQUARE
ELEC	ELECTRICAL	S.STL	STAINLESS STEEL
EL OR ELEV(S)	ELEVATION (S)	STL	STEEL
EQ	EQUAL	S.A.T.	SUSPENDED ACOUSTICAL TILE CEILING
EQUIP	EQUIPMENT	STOR	STORAGE
EXIST OR EX	EXISTING	SIM	SIMILAR
EXTER	EXTERIOR	STRUCT	STRUCTURAL
F.B.	FACE BRICK	SUSP	SUSPENDED
FD.	FILE DRAWER, FLOOR DRAIN	T	TALL
FDN	FOUNDATION	T+G	TONGUE AND GROOVE
F.E.M.A.	FEDERAL EMERGENCY MANAGEMENT ASSOCIATION	T.B.	TACKBOARD
F.E.C.	FIRE EXTINGUISHER CABINET	T.B.R.	TO BE REMOVED
FIN	FINISH (ED)	THK	THICK (NESS)
FLR(NG)	FLOOR (ING)	TO	TOP OF
FRP	FIBERGLASS REINFORCED PANEL	TYP	TYPICAL
FTG.	FOOTING	UON.	UNLESS OTHERWISE NOTED
GA	GAUGE	VB	VINYL BASE
GALV	GALVANIZED	VCT	VINYL COMPOSITION TILE
GB.	GYPSUM BOARD	VERT	VERTICAL
GL	GLASS, GLAZING	VEST.	VESTIBULE
GYP	GYPSUM	WC.	WALL COVERING
H	HIGH	WWF	WELDED WIRE FABRIC
HGT	HEIGHT	W.	WIDTH
HR.	HOUR	W/	WITH
HORIZ.	HORIZONTAL	WIN (S)	WINDOW (S)
HM	HOLLOW METAL	W/O	WITHOUT
JNT.	JOINT	WD	WOOD
INSUL	INSULATION		
L	LENGTH		
LF	LINEAR FEET		

MATERIAL DESIGNATIONS:

CONCRETE	ROUGH WOOD (DISCONTINUOUS)
SAND OR GROUT	ROUGH WOOD (CONTINUOUS)
GRAVEL FILL	CONCRETE MASONRY UNITS (CMU)
INSULATION (RIGID) OR	FACE BRICK
INSULATION (BATT.)	
INSULATION (SPRAY-ON FOAM TYPE)	

GENERAL NOTES

1. ALL ITEMS INDICATED IN THIS SET OF DRAWINGS ARE CONTRACTOR PROVIDED, UNLESS SPECIFICALLY STATED OTHERWISE.
2. ALL DIMENSIONS ARE TO FINISHED FACE OF WALL, UNLESS OTHERWISE INDICATED.
3. CONTRACTOR SHALL VERIFY ALL EXISTING CONDITIONS, PRIOR TO SUBMITTING A BID.
4. CONTRACTOR SHALL CAREFULLY COORDINATE ALL WORK OF ALL TRADES.
5. ALL WORK OF THE PROJECT SHALL BE PROVIDED IN COMPLETE ACCORDANCE WITH THE 2006 IBC FAMILY OF CODES; AS WELL AS CITY OF PEORIA AND PEORIA COUNTY CODES AND ORDINANCES; AND SHALL BE CAREFULLY COORDINATED. ALL PLUMBING WORK SHALL MEET THE REQUIREMENTS OF THE STATE OF ILLINOIS PLUMBING CODE AND THE MUNICIPAL WATER AUTHORITY.
6. CONTRACTOR SHALL BE RESPONSIBLE FOR ALL REQUIRED PERMITS AND FEES; INCLUDING BUT NOT LIMITED TO THOSE REQUIRED BY GOVERNMENT AGENCIES AND UTILITIES.
7. THESE DRAWINGS ARE NOT INTENDED TO DEPICT EACH AND EVERY DETAIL OF THE PROJECT. AS THE PARTY IN THE FIELD, THE CONTRACTOR IS IN THE BEST POSITION TO VERIFY THAT ALL CONDITIONS ARE COMPLETED TO PROVIDE A FULLY OPERATIONAL AND COMPLETE FACILITY. THE CONTRACTOR SHALL DO SO.
8. CONTRACTOR SHALL CLEAN ENTIRE SITE ON A DAILY BASIS; AND SHALL ENDEAVOR TO KEEP ALL REFUSE TO A MINIMUM.
9. ALL REFUSE MATERIALS SHALL BE PROPERLY AND LAWFULLY DISPOSED OF OFF-SITE.
10. ALL NEW CONSTRUCTION SHALL BE FULLY PROTECTED FROM ANY AND ALL DAMAGE. CONTRACTOR SHALL BE RESPONSIBLE FOR FULL REPAIR TO ORIGINAL CONDITION, OF ANY SUCH CONSTRUCTION SO DAMAGED.
11. STORAGE OF MATERIALS AND SUPPLIES, AND ANY POSSIBLY HAZARDOUS MATERIALS, INCLUDING PAINT, SHALL BE LAWFULLY STORED.
12. CONTRACTOR AND SITE SUPERINTENDENT SHALL BE ACCESSIBLE BY CELLPHONE DURING NORMAL WORKING HOURS THROUGHOUT THE DURATION OF THE PROJECT.
13. ALL MANUFACTURERS, PRODUCTS, AND SYSTEMS SPECIFIED SHALL BE USED UNLESS AN EQUAL IS APPROVED BY ARCHITECT AND OWNER.
14. ALL MATERIALS, PRODUCTS, AND SYSTEMS TO BE INSTALLED PER MANUFACTURERS INSTRUCTIONS, U.O.N.
15. IT IS THE RESPONSIBILITY OF THE CONTRACTOR TO VERIFY ALL DIMENSIONS AND CONDITIONS, NEW OR EXISTING, TO FACILITATE THE CONSTRUCTION CONTAINED WITHIN THIS SET OF DOCUMENTS. LAYOUT OF ALL NEW CONSTRUCTION SHALL BE COMPLETED AND VERIFIED BEFORE CONSTRUCTION BEGINS. ARCHITECT SHALL BE NOTIFIED IMMEDIATELY IF FIELD CONDITIONS VARY.

Title block

apaceDesign
architects
engineers
designers
apaceDesign
2112 East War Memorial Drive
Peoria Illinois 61614
t:309.685.4722 f:309.685.4784
www.apaceDesign.com

Title Sheet

Peoria PlayHouse Children's Museum
Peoria Park District
Glen Oak Park Pavillion
Peoria, IL 61603

NO.	ISSUE	DATE
1	Bidding Documents	3.19.14

DATE 3.19.14	PROJECT NO. 24905.02
DRAWN BY BLK	SHEET
CHECKED BLK	G000
APPROVED SJM	1 OF 1

CODE

BUILDING CODE

1. THIS STRUCTURE IS GOVERNED BY THE 2006 INTERNATIONAL BUILDING CODE.

DESIGN LOADS

1. UNIFORM FLOOR LIVE LOADS:

STORAGE/EQUIPMENT	125 PSF
STAGES & PLATFORMS	125 PSF
ASSEMBLY, MOVABLE SEATS	100 PSF
CORRIDORS, 1ST FLOOR	100 PSF
CORRIDORS, ABOVE 1ST FLOOR	80 PSF
LOBBIES	100 PSF

2. ELEVATOR LID LIVE LOAD = 20 PSF, 300 LBS. CONCENTRATED LOAD ACTING ANYWHERE ALONG THE SPAN.
3. WIND LOAD:
BASIC WIND SPEED, V = 90 MPH
WIND IMPORTANCE FACTOR, I = 1.15
WIND EXPOSURE CATEGORY = "C"
INTERNAL PRESSURE COEFFICIENT = ±0.18 (ENCLOSED)
COMPONENTS AND CLADDING WIND: SEE DETAIL 1 THIS SHEET
4. THE MECHANICAL ROOF TOP UNIT (RTU) WEIGHTS NEED TO BE VERIFIED PRIOR TO CONSTRUCTION BY THE CONTRACTOR.

GENERAL

1. COORDINATE STRUCTURAL SHEETS WITH ALL OTHER SHEETS FOR PIPE SIZES AND LOCATIONS, BEAM POCKETS, GRATING LEDGES, BLOCK OUTS, ELECTRICAL REQUIREMENTS AND ANCHOR BOLTED ATTACHMENTS.
2. SEE ARCHITECTURAL, MECHANICAL, ELECTRICAL, AND PLUMBING PLANS FOR ADDITIONAL SLEEVES, INSERTS, ETC.
3. ALL SUBTERRANEAN STRUCTURES, UTILITIES, PIPING, ETC. IN THE AREA OF ALL EXCAVATIONS TO BE LOCATED AND MARKED BY THE CONTRACTOR PRIOR TO EARTH REMOVAL WORK. PIN FLAGS OR PAINT ARE ACCEPTABLE METHODS. CONTRACTOR TO MAINTAIN MARKERS UNTIL ALL EXCAVATION ACTIVITIES HAVE CEASED. COORDINATE WITH OWNER.
4. ALL SECTIONS, DETAILS, AND NOTES SHOWN ON THE DRAWINGS ARE INTENDED TO BE TYPICAL AND SHALL APPLY TO SIMILAR SITUATIONS ELSEWHERE UNLESS OTHERWISE NOTED.
5. CONTRACTOR IS RESPONSIBLE FOR ADEQUACY OF TEMPORARY SHORING INCLUDING WALL SHORING TO RESIST LATERAL LOADS DURING CONSTRUCTION.
6. ALL ASTM DESIGNATIONS SHALL BE THE LATEST UNLESS NOTED OTHERWISE.
7. DRAWING SCALES ARE FOR REFERENCE ONLY FOR PLANS AND DETAILS, AND ARE SUBJECT TO VARIATIONS OF DIFFERENT CONDITIONS. DO NOT SCALE DRAWINGS FOR DIMENSIONS.

FOUNDATION

1. ALL FOOTING EXCAVATIONS SHALL BE CLEAN AND FREE OF DEBRIS, STANDING WATER, AND LOOSE SOIL PRIOR TO PLACING CONCRETE. FOOTINGS SHALL BE INSPECTED AND APPROVED PRIOR TO CONCRETE PLACEMENT.
2. FOOTINGS SHALL BE CENTERED ON COLUMN LINES UNLESS NOTED OTHERWISE (U.N.O.).
3. BANK FORM FOOTINGS WHERE SOIL CONDITIONS WILL PERMIT, OR WHERE INDICATED.
4. IN STRUCTURAL AREAS (WHERE STRUCTURES DERIVE SOME OR ALL SUPPORT FROM FILL-SUPPORTED FOUNDATIONS) AND SLAB-ON-GRADE, FILL SHALL BE COMPACTED TO 98 PERCENT OF STANDARD PROCTOR MAXIMUM DRY DENSITY (ASTM D-698).
5. ALL FILL MATERIAL SHALL BE APPROVED FOR USE IN ADVANCE OF PLACEMENT. NO FILL SHALL BE PLACED OVER FROZEN, MUDDY, OR OTHER DELETERIOUS MATERIAL. LIFT THICKNESS SHALL BE MINIMIZED TO ALLOW EFFICIENT COMPACTION. NO FILL MAY BE PLACED OVER A PREVIOUS LIFT THAT HAS NOT BEEN ADEQUATELY COMPACTED AND HAS BEEN ACCEPTED.
6. BACKFILL AGAINST GRADE WALLS SHALL BE PLACED EVENLY ON ALL SIDES.
7. BEAR ALL SPREAD FOOTINGS ON UNDISTURBED SOILS HAVING AN ASSUMED MINIMUM NET ALLOWABLE BEARING CAPACITY OF 1500 POUNDS PER SQUARE FOOT.
8. ALLOW INSPECTION OF ALL FINISHED EXCAVATIONS AND BEARING SUBGRADES BEFORE PLACING CONCRETE.
9. REFER TO SPECIFICATION SECTION 31 20 00, "EARTH MOVING" FOR ADDITIONAL REQUIREMENTS.

EPOXY

1. THE EPOXY SHALL BE A TWO COMPONENT, EPOXY RESIN BONDING SYSTEM CONFORMING TO THE REQUIREMENTS OF ASTM DESIGNATION: C 881, TYPE IV AND V, GRADE 2, CLASS C. SUBMIT INFORMATION ON EPOXY MATERIAL TO ENGINEER FOR APPROVAL.
2. DRILL HOLES IN EXISTING CONCRETE, THEN REPEATEDLY WIRE BRUSH HOLES CLEAN AND REMOVE DUST WITH COMPRESSED AIR, UNTIL THE HOLE IS COMPLETELY CLEAN. ANCHOR DOWEL BARS WITH ADHESIVE. FOLLOW ALL ADDITIONAL MANUFACTURER'S INSTRUCTIONS.

METAL DECKING

1. FABRICATE AND ERECT METAL DECKING IN ACCORDANCE WITH SDI DESIGN MANUAL FOR COMPOSITE DECKS, FORM DECKS, AND ROOF DECKS.
2. SHEET STEEL: ASTM A653 G60 GALVANIZED.
3. IMMEDIATELY AFTER WELDING DECK IN PLACE, CLEAN AND TOUCHUP WELDS, BURNED AREAS, AND SURFACE COATING DAMAGE WITH ZINC RICH PAINT. CONTRACTOR IS RESPONSIBLE FOR PROVIDING POUR STOPS AT EDGES OF METAL DECK.
4. THE MANUFACTURING, DETAILING AND ERECTION OF METAL DECK SHALL BE IN ACCORDANCE WITH THE STEEL DECK INSTITUTE SPECIFICATION. STRUCTURAL DIAPHRAGM ACTION SHALL BE PROVIDED BY THE METAL DECK AND ITS ATTACHMENT.
5. MECHANICAL FASTENERS MAY BE SUBSTITUTED FOR WELDS IF INFORMATION IS PROVIDED TO THE ARCHITECT/ENGINEER CONFIRMING DIAPHRAGM STRENGTH AND STIFFNESS IS ACHIEVED.
6. PROVIDE CONTINUOUS SHEET METAL CLOSURES AT ALL SLAB OPENINGS AND SLAB EDGES AND CONTINUOUS DECK CLOSURES AT ALL DECK ENDS, PROVIDE COLUMN CLOSURES, RIDGE AND VALLEY PLATES, CANT STRIPS, RECESSED DRAIN SUMP PANS, ETC. PROVIDE SUPPLEMENTAL FRAMING AT OPENINGS AS REQUIRED FOR SUPPORT OF METAL DECK. PROVIDE STRAP ANCHORS OR TEMPORARY SHORING AS NECESSARY TO CONTROL CANTILEVER DEFLECTIONS AT FLOOR SLAB EDGES.
7. REFER TO SPECIFICATION SECTION 05 31 00, "STEEL DECKING" FOR ADDITIONAL REQUIREMENTS.

CONCRETE

1. SEE ARCHITECTURAL, MECHANICAL, ELECTRICAL, AND PLUMBING DRAWINGS FOR ADDITIONAL SLEEVES, INSERTS, EQUIPMENT PADS, EMBEDDED ITEMS, ETC.
2. ALL CONCRETE SLABS SHALL HAVE A MINIMUM 28 DAY COMPRESSIVE STRENGTH OF 4,000 PSI. ALL CONCRETE FOOTINGS AND FOUNDATION WALLS SHALL HAVE A MINIMUM 28 DAY COMPRESSIVE STRENGTH OF 4,000 PSI.
3. ALL REINFORCEMENT BARS SHALL CONFORM TO ASTM: A615, GRADE 60.
4. ALL REINFORCEMENT SHALL BE FABRICATED IN ACCORDANCE WITH ACI 315DETAILS AND DETAILING OF CONCRETE REINFORCEMENT. REINFORCEMENT SHALL BE CLEAN AND FREE OF GREASE, SCALING, AND RUST.
5. PROTECTIVE COVERING FOR REINFORCEMENT BARS SHALL BE AS FOLLOWS UNLESS OTHERWISE NOTED ON THE DRAWINGS:
   A. 3" WHERE CONCRETE IS CAST AGAINST GROUND
   B. 1" FOR SLABS
   C. 1 ½" FOR WALLS, PIERS, AND COLUMNS
6. PROVIDE CORNER BARS IN ALL FOUNDATION WALLS EQUAL IN SIZE AND NUMBER TO HORIZONTAL REINFORCING.
7. A ¾" x ¾" CHAMFER SHALL BE PROVIDED AT THE EDGE OF ALL EXPOSED FINISHED WALLS, BEAMS, AND COLUMNS UNLESS OTHERWISE NOTED.
8. ALL WELDED WIRE FABRIC SHALL CONFORM TO ASTM A-185, FLAT SHEETS ONLY.
9. CONTINUOUS TOP AND BOTTOM BARS, WHEN SHOWN IN SECTION ONLY, SHALL BE LAPPED AS FOLLOWS: TOP BARS NEAR MIDSPANS, BOTTOM BARS DIRECTLY OVER SUPPORTS.
10. ALL CONCRETE WORK SHALL CONFORM TO: ACI 318, BUILDING CODE FOR STRUCTURAL CONCRETE AND ACI 301, SPECIFICATION FOR STRUCTURAL CONCRETE.
11. PROVIDE CONTROL OR CONSTRUCTION JOINTS IN SLAB-ON-GRADE AT 12'-0" MAXIMUM SPACES OR CLOSER, EACH DIRECTION. CONTROL JOINTS TO BE SAW CUT OR TOOLED ONE-QUARTER DEPTH OF THE SLAB.
12. UNLESS OTHERWISE SHOWN, FOR SLABS ON GRADE, PROVIDE ½" THICK PREMOLDED JOINT FILLER AND SEALANT TO ISOLATE THE SLAB FROM CONTACT WITH THE STRUCTURES ALONG ITS PERIMETER AT DEEP FOUNDATIONS, CAST SLABS TIGHT TO WALLS AND PROVIDE ½ x ½" FORMED NOTCH FILLED WITH SEALANT. SEE FOUNDATION DETAILS.
13. REFER TO SPECIFICATION SECTION 03 30 00, " CAST-IN-PLACE CONCRETE" FOR ADDITIONAL REQUIREMENTS.

STRUCTURAL TESTING AND SPECIAL INSPECTION

1. STRUCTURAL INSPECTIONS SHALL BE IN ACCORDANCE WITH CHAPTER 17 OF 2006 IBC.
2. SPECIAL INSPECTION REPORTS SHALL BE FURNISHED TO ARCHITECT, STRUCTURAL ENGINEER , AND CONTRACTOR. DISCREPANCIES SHALL BE BROUGHT TO THE ATTENTION OF CONTRACTOR, AND IF NOT CORRECTED, SHALL BE REPORTED TO ARCHITECT, AND STRUCTURAL ENGINEER.
3. THE SPECIAL INSPECTOR SHALL SUBMIT A FINAL REPORT STATING THAT THE STRUCTURAL WORK WAS, TO THE BEST OF THE SPECIAL INSPECTOR'S KNOWLEDGE, PERFORMED IN ACCORDANCE WITH THE CONTRACT DOCUMENTS.
4. THE FOLLOWING TYPES OF WORK REQUIRE STRUCTURAL SPECIAL INSPECTIONS:
   A. STEEL CONSTRUCTION -PER TABLE 1704.3 OF THE 2006 IBC AND SPECIFICATION SECTION 05 12 00 "STRUCTURAL STEEL FRAMING"
   B. CONCRETE CONSTRUCTION -PER TABLE 1704.4 OF THE 2006 IBC AND SPECIFICATION SECTION 03 30 00 "CAST-IN-PLACE CONCRETE"
   C. MASONRY CONSTRUCTION -PER TABLE 1704.5.1 (LEVEL 1) OF THE 2006 IBC, AND SPECIFICATION SECTION 04 20 00 "UNIT MASONRY"
   D. SOILS -PER SECTION 1704.7 OF THE 2006 IBC, AND SPECIFICATION SECTION 31 20 00 "EARTH MOVING"

COLD-FORMED METAL FRAMING

1. THE CONTRACTOR'S SPECIALTY STRUCTURAL ENGINEER SHALL BE RESPONSIBLE FOR THE DESIGN OF ALL COLD-FORMED METAL FRAMING. THIS DESIGN SHALL MEET THE LOAD AND MATERIAL CRITERIA PRESENTED IN THE PLANS AND SPECIFICATIONS. IN ADDITION, THE DESIGN SHALL BE PERFORMED BY A STRUCTURAL ENGINEER LICENSED IN THE STATE OF ILLINOIS, DRAWINGS AND CALCULATIONS SHALL BE SUBMITTED TO THE ENGINEER FOR REVIEW.
2. MINIMUM SIZES ARE INDICATED ON ARCHITECTURAL DRAWINGS AND IN SPECIFICATIONS.
3. STRUCTURAL CAPACITY PERFORMANCE: PROVIDE COLD-FORMED METAL FRAMING CAPABLE OF WITHSTANDING THE FOLLOWING DESIGN LOADS:
   A. WIND LOAD: SEE COMPONENTS AND CLADDING WIND TABLE DETAIL 1, THIS SHEET
   B. 5 PSF PRESSURE AT INTERIOR WALLS
4. DEFLECTION LIMITS: DESIGN EXTERIOR WALL FRAMING SYSTEMS WITHOUT DEFLECTIONS GREATER THAN A HORIZONTAL DEFLECTION OF 1/600 OF THE WALL HEIGHT AT LOCATIONS WITH MASONRY VENEER OR 1/360 OF THE WALL HEIGHT AT LOCATIONS WITH SIDING ONLY USING A DESIGN WIND LOAD OF 70 PERCENT OF THE COMPONENTS AND CLADDING WIND SHOWN IN DETAIL 1, THIS SHEET.
5. COLD-FORMED STEEL FRAMING, GENERAL: DESIGN ACCORDING TO AISI'S "STANDARD FOR COLD-FORMED STEEL FRAMING–GENERAL PROVISIONS"
6. PROVIDE ACCESSORIES OF MANUFACTURER'S STANDARD THICKNESS AND CONFIGURATION, UNLESS OTHERWISE INDICATED, AS FOLLOWS:
   A. BRACING, BRIDGING, AND SOLID BLOCKING
   B. WEB STIFFENERS
   C. ANCHOR CLIPS
   D. END CLIPS
   E. FOUNDATION CLIPS
   F. GUSSET PLATES
   G. STUD KICKERS, KNEE BRACES, AND GIRTS
   H. HOLE REINFORCING PLATES
   I. BACKER PLATE
   J. EXPANSION ANCHORS
   K. POWER-ACTUATED ANCHORS
7. INSTALL FRAMING MEMBERS IN ONE-PIECE LENGTHS.
8. FASTEN COLD-FORMED METAL FRAMING MEMBERS BY WELDING, SCREW FASTENING, CLINCH FASTENING, OR RIVETING AS STANDARD WITH FABRICATOR. WIRE TYING OF FRAMING MEMBERS IS NOT PERMITTED.
9. INSTALL CONTINUOUS TOP AND BOTTOM TRACKS SIZED TO MATCH STUDS. ANCHOR SPACING: TO MATCH STUD SPACING.
10. INSTALL HORIZONTAL BRIDGING IN STUD SYSTEM, SPACED AT 48 INCHES. FASTEN AT EACH STUD INTERSECTION.
11. INSTALL MISCELLANEOUS FRAMING AND CONNECTIONS, INCLUDING SUPPLEMENTARY FRAMING, WEB STIFFENERS, CLIP ANGLES, CONTINUOUS ANGLES, ANCHORS, AND FASTENERS, TO PROVIDE A COMPLETE AND STABLE WALL-FRAMING SYSTEM.
12. REFER TO SPECIFICATION SECTION 05 40 00, "COLD-FORMED METAL FRAMING" FOR ADDITIONAL REQUIREMENTS.

STRUCTURAL STEEL

1. ALL DETAILING, FABRICATION, AND ERECTION OF STRUCTURAL STEEL MEMBERS SHALL BE IN ACCORDANCE WITH THE AISC "SPECIFICATION FOR STRUCTURAL STEEL BUILDINGS," 13TH EDITION.
2. STRUCTURAL STEEL SHALL BE AS FOLLOWS:
   A. WIDE FLANGE SECTIONS: ASTM A992, GRADE 50 KSI.
   B. OTHER SHAPES: BARS, ANGLES, AND PLATES: ASTM A36 UNLESS NOTED OTHERWISE.
3. ALL HSS (HOLLOW STRUCTURAL SECTIONS) SHALL BE AS FOLLOWS:
   A. SQUARE AND RECTANGULAR SECTIONS: ASTM A 500, GRADE B (46 KSI).
   B. ROUND SECTIONS: ASTM A53, TYPE E (35 KSI).
4. STRUCTURAL STEEL NOT REQUIRED TO RECEIVE SPRAYED FIRE PROTECTION SHALL RECEIVE ONE COAT OF RUST INHIBITIVE SHOP PAINT. ALL FIELD CONNECTIONS AND DAMAGED PORTIONS OF SHOP PAINT SHALL BE SPOT PAINTED UNLESS ENCASED IN CONCRETE.
5. ALL BOLTED CONNECTIONS SHALL BE MADE WITH ASTM A325 H.S. BOLTS UNLESS NOTED OTHERWISE.
6. ANY BOLTS DESIGNATED AS SLIP-CRITICAL (SC) SHALL BE LOAD INDICATOR TYPE BOLTS.
7. ALL WELDING SHALL BE DONE IN ACCORDANCE WITH AWS SPECIFICATION D1.1. BY AWS CERTIFIED WELDERS. WELD MATERIALS COMPATIBLE WITH MATERIALS BEING WELDED.
8. ALL SHEAR STUD CONNECTORS SHALL BE ASTM A108, GRADE 1015, FORGED STEEL, HEADED, UNFINISHED. WELDED IN ACCORDANCE WITH AWS D1.1.
9. OPENINGS REQUIRED IN STRUCTURAL STEEL MEMBERS SHALL BE SHOWN ON THE SHOP DRAWINGS. FIELD CUTTING OF HOLES IN THE STRUCTURAL STEEL MEMBERS SHALL NOT BE PERMITTED WITHOUT WRITTEN PERMISSION OF THE ENGINEER.
10. WHENEVER CONSTRUCTION SCHEDULING REQUIRES THE ERECTION OF STRUCTURAL MEMBERS WHICH BY THEMSELVES WOULD BE CONSIDERED LATERALLY UNSTABLE, ADEQUATE TEMPORARY BRACING SHALL BE PROVIDED.
11. ALL EXTERIOR MASONRY SHELF ANGLES, LINTEL BEAMS, AND LINTEL PLATES SHALL BE HOT DIP GALVANIZED ACCORDING TO ASTM A123.
12. CONNECTIONS NOT DETAILED ON THE PLANS SHALL BE SELECTED IN ACCORDANCE WITH AISC SPECIFICATIONS, TYPE 2 FRAMING CONNECTIONS USING BEARING TYPE ¾" DIA. ASTM-A325N BOLTS UNLESS OTHERWISE NOTED. COMPRESSIBLE-WASHER-TYPE DIRECT TENSION INDICATORS OR TWIST-OFF TENSION-CONTROL BOLTS CONFORMING TO RCSC SPECIFICATION FOR STRUCTURAL JOINTS USING ASTM A325 OR A490 BOLTS SHALL BE PROVIDED AT ALL BOLTED CONNECTIONS. FOR A GIVEN SIZE AND GRADE OF BEAMS, CONNECTIONS SHALL BE SELECTED BY THE FABRICATOR TO SUPPORT THE FOLLOWING BEAM REACTIONS (UNLESS REACTION VALUES ARE SHOWN ON DRAWINGS):
   R = W/2 FOR NON-COMPOSITE BEAMS
   R = 1.3*W/2 FOR COMPOSITE BEAMS
   W = ALLOWABLE UNIFORM LOAD, KIPS, FOR BEAM SPAN IN FEET PER AISC MANUAL OF STEEL CONSTRUCTION, 13TH EDITION, ALLOWABLE LOADS ON BEAM TABLES.

MIN. NUMBER OF BOLTS PER CONNECTION
PROVIDE MORE BOLTS AS REQ'D TO MEET LOADING REQUIREMENTS.

2	3	4	5	6	8
W8 W10 C8	W12 W14 W16	W18 W21	W24 W27	W30 W33	W36

MASONRY

1. PROVIDE UNIT MASONRY THAT DEVELOPS 2,000 PSI NET-AREA COMPRESSIVE STRENGTH (f'm) AT 28 DAYS.
2. MASONRY DESIGN BASED ON INSPECTED WORKMANSHIP. SAMPLE, TEST, AND INSPECT MASONRY IN ACCORDANCE WITH TABLE 1704.5.3 (LEVEL 2) OF THE 2006 IBC, AND SPECIFICATION SECTION 04 20 00 "UNIT MASONRY," INCLUDING:
   A. CERTIFICATES FOR MATERIALS USED IN MASONRY CONSTRUCTION INDICATING COMPLIANCE WITH THE CONTRACT DOCUMENTS.
   B. VERIFICATION OF f'm PRIOR TO CONSTRUCTION.
   C. a) AS MASONRY CONSTRUCTION BEGINS, VERIFY THAT THE FOLLOWING ARE IN COMPLIANCE:
      - PROPORTIONS OF SITE MIXED MORTAR
      - CONSTRUCTION OF MORTAR JOINTS
      - LOCATION OF REINFORCEMENT AND CONNECTORS
   b) PRIOR TO GROUTING, VERIFY THAT THE FOLLOWING ARE IN COMPLIANCE:
      - GROUT SPACE IS CLEAN
      - GRADE AND SIZE OF REINFORCEMENT, CONNECTORS
      - PLACEMENT OF REINFORCEMENT AND CONNECTORS
      - PROPORTIONS OF SITE PREPARED GROUT
      - CONSTRUCTION OF MORTAR JOINTS
   c) VERIFY PLACEMENT OF GROUT
   d) OBSERVE PREPARATION OF GROUT SPECIMENS, MORTAR SPECIMENS, AND/OR PRISMS
   e) VERIFY COMPLIANCE WITH THE REQUIRED INSPECTION PROVISIONS OF THE CONTRACT DOCUMENTS AND APPROVED SUBMITTALS
3. MORTAR TO BE TYPE "N" COMPLYING WITH THE REQUIREMENTS OF ASTM C 270.
4. ALL GROUT SHALL HAVE A MINIMUM 28 DAY COMPRESSIVE STRENGTH OF 2,500 PSI AND SHALL CONFORM TO THE REQUIREMENTS OF ASTM C 476.
5. CMU UNITS SHALL CONFORM TO ASTM C 55 OR C 90 WITH A MINIMUM AVERAGE NET AREA COMPRESSIVE STRENGTH OF 2,800 PSI MIN.
6. REINFORCEMENT TO BE AS CALLED FOR ON THE DRAWINGS AND SCHEDULES. ALL REINFORCEMENT BARS SHALL CONFORM TO ASTM A 615, GRADE 60.
7. MASONRY UNITS TO BE PLACED IN RUNNING BOND, UNLESS OTHERWISE NOTED.
8. ALL BEAM BEARINGS SHALL BE GROUTED TO THE FOUNDATION.
9. MASONRY CONSTRUCTION SHALL CONFORM TOT HE REGULATIONS OF ACI 530.1/ASCE 6/TMS 602.
10. A. VERTICAL CMU REINFORCEMENT SHALL BE PROVIDED AT CORNERS, WITHIN 16 IN. OF EACH SIDE OF OPENINGS, WITHIN 8 IN. OF EACH SIDE OF CONTROL JOINTS, WITHIN 8 IN. OF THE ENDS OF WALLS, AND AT A MAXIMUM SPACING AS INDICATED.
    B. HORIZONTAL JOINT REINFORCEMENT FOR CMU WALLS SHALL CONSIST OF AT LEAST TWO WIRES OF W1.7 SPACED NOT MORE THAN 16 IN. ON CENTER.
11. REFER TO SPECIFICATION SECTION 04 20 00, "UNIT MASONRY" FOR ADDITIONAL REQUIREMENTS.

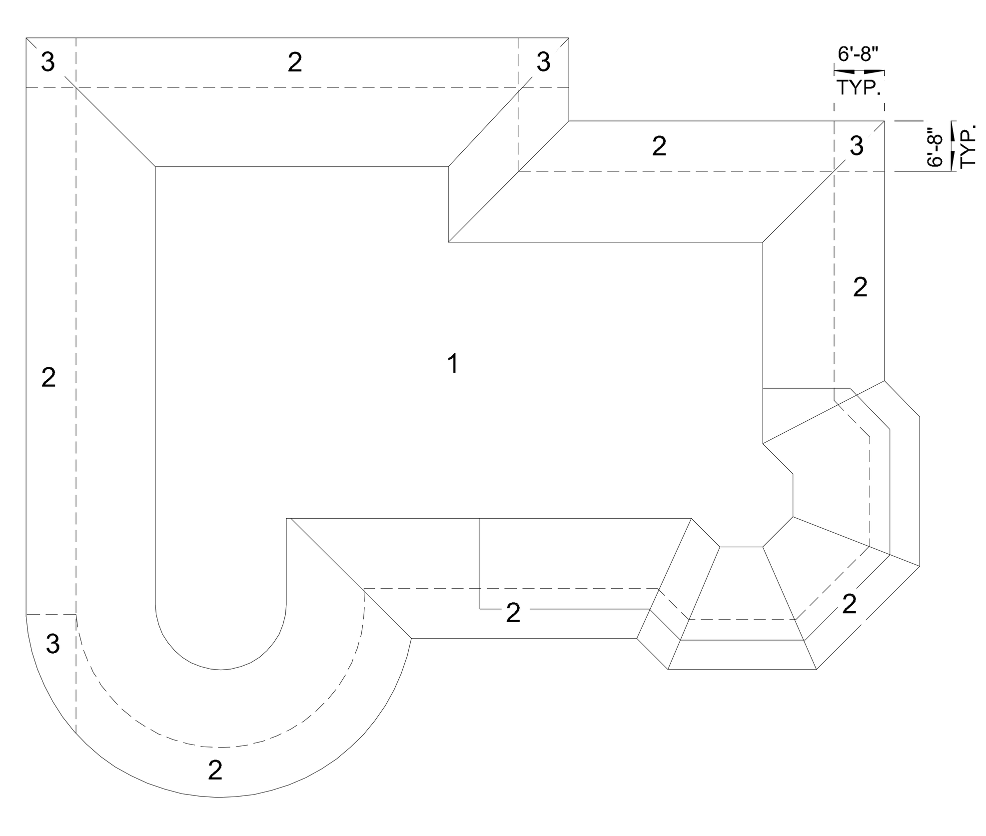

BASIC WIND SPEED	ZONE	EFF. WIND AREA	CALCULATED DESIGN WIND PRESSURE (PSF)	
90 MPH	ROOF 1	<10	19.4	-21.3
	ROOF 1	20	19.0	-20.2
	ROOF 1	50	18.3	-18.7
	ROOF 1	>100	17.7	-17.7
	ROOF 2	<10	19.4	-24.9
	ROOF 2	20	19.0	-23.8
	ROOF 2	50	18.3	-22.4
	ROOF 2	>100	17.7	-21.3
	ROOF 3	<10	19.4	-24.9
	ROOF 3	20	19.0	-23.8
	ROOF 3	50	18.3	-22.4
	ROOF 3	>100	17.7	-21.3
	WALL 4	<10	21.3	-23.1
	WALL 4	20	20.3	-22.1
	WALL 4	50	19.0	-20.9
	WALL 4	100	18.1	-19.9
	WALL 4	>500	15.9	-17.7
	WALL 5	<10	21.3	-28.5
	WALL 5	20	20.3	-26.6
	WALL 5	50	19.0	-24.1
	WALL 5	100	18.1	-22.1
	WALL 5	>500	15.9	-17.7

2 COMPONENTS AND CLADDING WIND
NONE

apaceDesign
architects engineers designers
apaceDesign
2112 East War Memorial Drive
Peoria Illinois 61614
t:309.685.4722 f:309.685.4784
www.apaceDesign.com

HANSON
7625 N. University St., Suite 200
Peoria, Illinois 61614

© Copyright Hanson Professional Services Inc. 2014

STRUCTURAL GENERAL NOTES

Peoria PlayHouse Children's Museum
Peoria Park District
Glen Oak Park Pavillion
Peoria, IL 61603

NO.	ISSUE	DATE
1	Bidding Documents	3.19.14

DATE 03.19.14	PROJECT NO. 24905.02
DRAWN BY ABK	SHEET
CHECKED TND	S001
APPROVED TND	1 OF 8

NOT FOR CONSTRUCTION

I:\13JOBS\13L0143\CAD\STRUCT\SHEET\SHEETS.DWG MAR 19, 2014 9:08AM ZEIGL00157

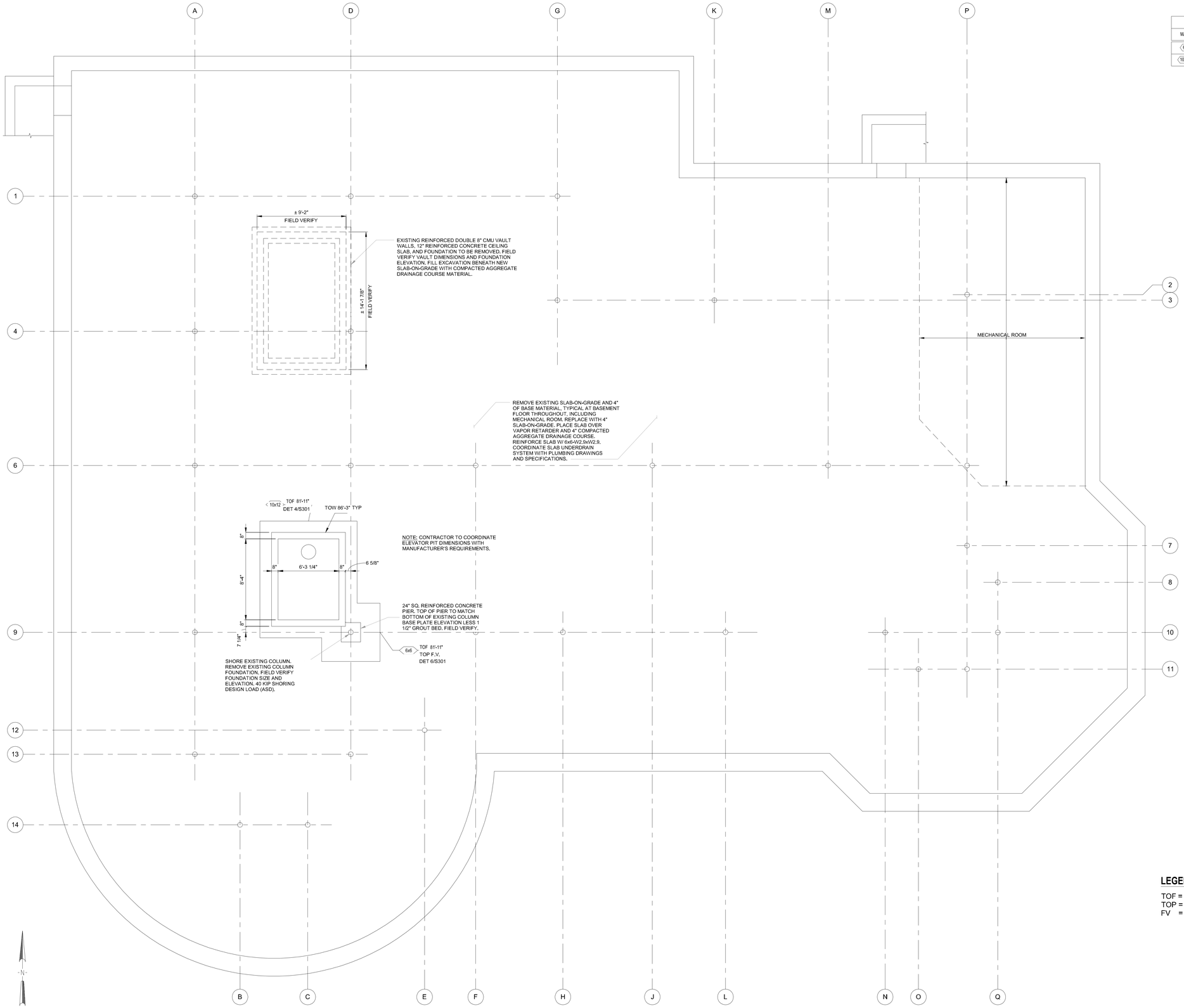

FOUNDATION SCHEDULE

SPREAD FOOTINGS		
MARK	SIZE	REINF.
6 x 6	6'-0" x 6'-0" x 1'-6"	6-#5 BARS EACH WAY
10 x 12	10'-0" x 12'-0" x 1'-6"	#5 BARS AT 12" CTS. EACH WAY

LEGEND

TOF = TOP OF FOOTING ELEVATION
TOP = TOP OF PIER ELEVATION
FV = FIELD VERIFY

1 FOUNDATION PLAN
1/4" = 1'-0"

apaceDesign
architects
engineers
designers
apaceDesign
2112 East West Mansfield Drive
Peoria, Illinois 61614
t:309.686.4722 f:309.686.4784
www.apaceDesign.com

HANSON

© Copyright Hanson Professional Services Inc., 2014

7625 N. University St., Suite 200
Peoria, Illinois 61614

FOUNDATION PLAN

Peoria PlayHouse Children's Museum
Peoria Park District
Glen Oak Park Pavillion
Peoria, IL 61603

NO.	ISSUE	DATE
1	Bidding Documents	3.19.14

NOT FOR CONSTRUCTION

DATE 03.19.14	PROJECT NO. 24905.02
DRAWN BY ABK	SHEET
CHECKED TND	S101
APPROVED TND	2 OF 8

I:\13JOBS\13L0143\CAD\STRUCT\SHEET\SHEETS.DWG MAR 19, 2014 9:08AM ZEIGLOO157

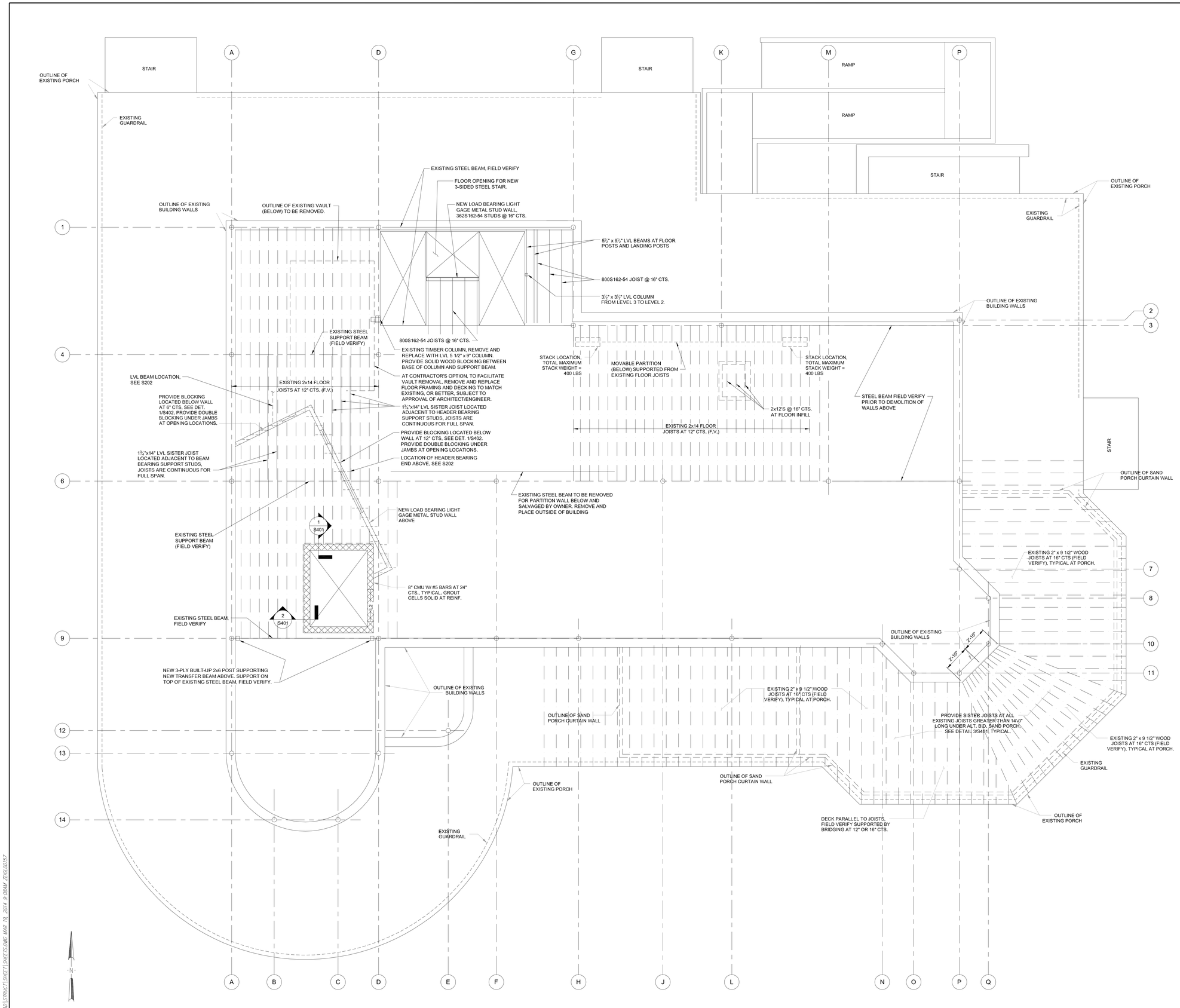

1 LEVEL 2 FRAMING PLAN

1/4" = 1'-0"

apacedesign
2115 East War Memorial Drive
Peoria, Illinois 61614
(309) 685-4125 / (309) 685-4794
www.apacedesign.com
architecture
interiors
graphics
design

HANSON
7625 N. University St., Suite 200
Peoria, Illinois 61614

© Copyright Hanson Professional Services Inc., 2014

LEVEL 2 FRAMING PLAN

Peoria PlayHouse Children's Museum
Peoria Park District
Glen Oak Park Pavillion
Peoria, IL 61603

NO.	ISSUE	DATE
1	Bidding Documents	3.19.14

NOT FOR CONSTRUCTION

DATE 03.19.14	PROJECT NO. 24905.02
DRAWN BY ABK	SHEET
CHECKED TND	S201
APPROVED TND	3 OF 8

E:\ZJOBS\24905\24905\CAD\STRUCT\SHEETS.DWG MAR 19, 2014 9:08AM ZSQUIRES

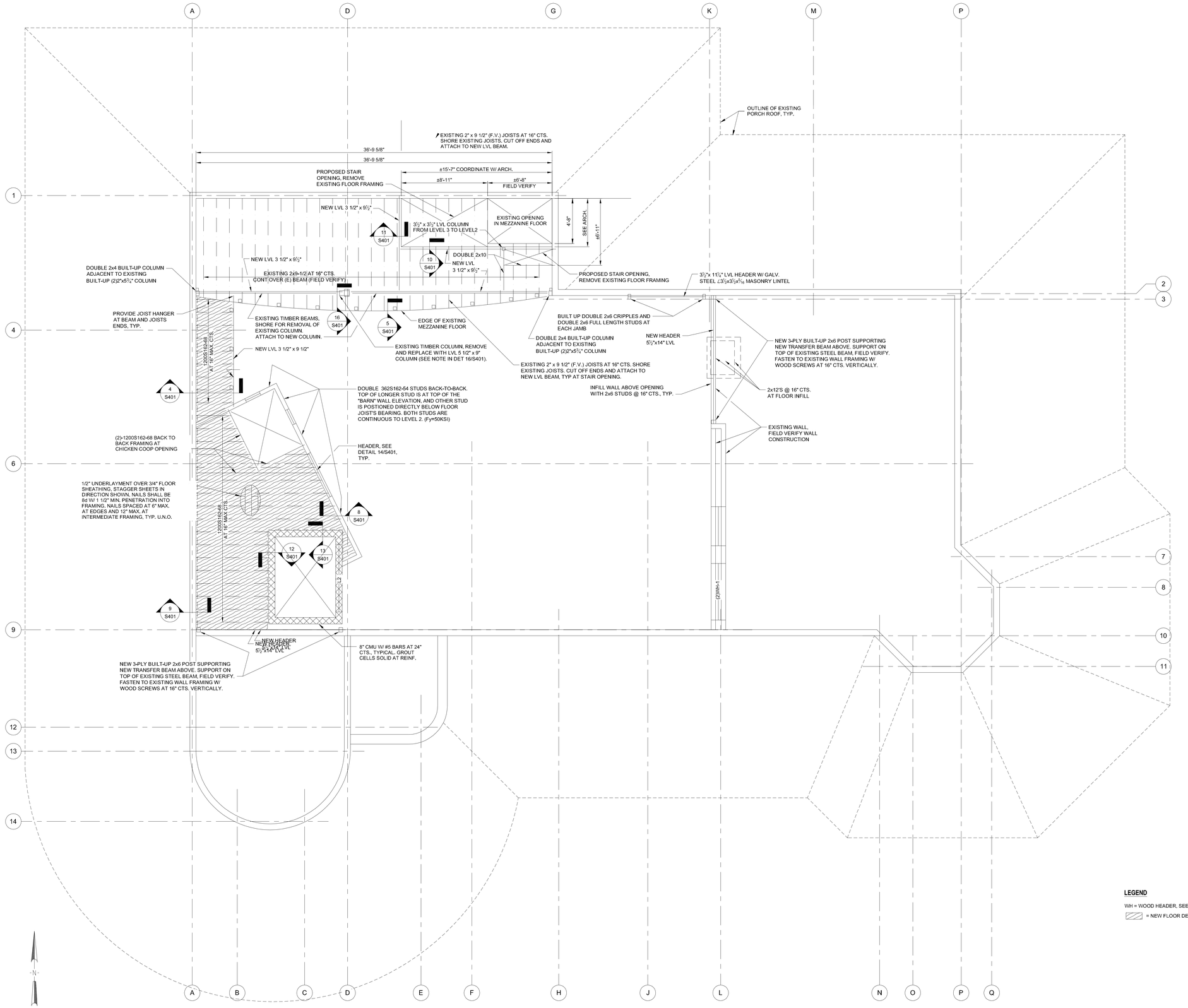

1 LEVEL 3 FLOOR FRAMING PLAN
1/4" = 1'-0"

apaceDesign
architects
planners
designers
apaceDesign
2115 East War Memorial Drive
Peoria, Illinois 61614
(309)685-4125 (309)686-4764
www.apacedesign.com

HANSON
© Copyright Hanson Professional Services Inc., 2014
7625 N. University St., Suite 200
Peoria, Illinois 61614

LEVEL 3 FLOOR FRAMING PLAN

Peoria PlayHouse Children's Museum
Peoria Park District
Glen Oak Park Pavillion
Peoria, IL 61603

NO.	ISSUE	DATE
1	Bidding Documents	3.19.14

NOT FOR CONSTRUCTION

DATE 03.19.14	PROJECT NO. 24905.02
DRAWN BY ABK	SHEET
CHECKED TND	S202
APPROVED TND	4 OF 8

J:\24905\13.01\A1\CAD\STRUCT\SHEETS\HNC MAR 19, 2014 8:08AM ZEQ0001S7

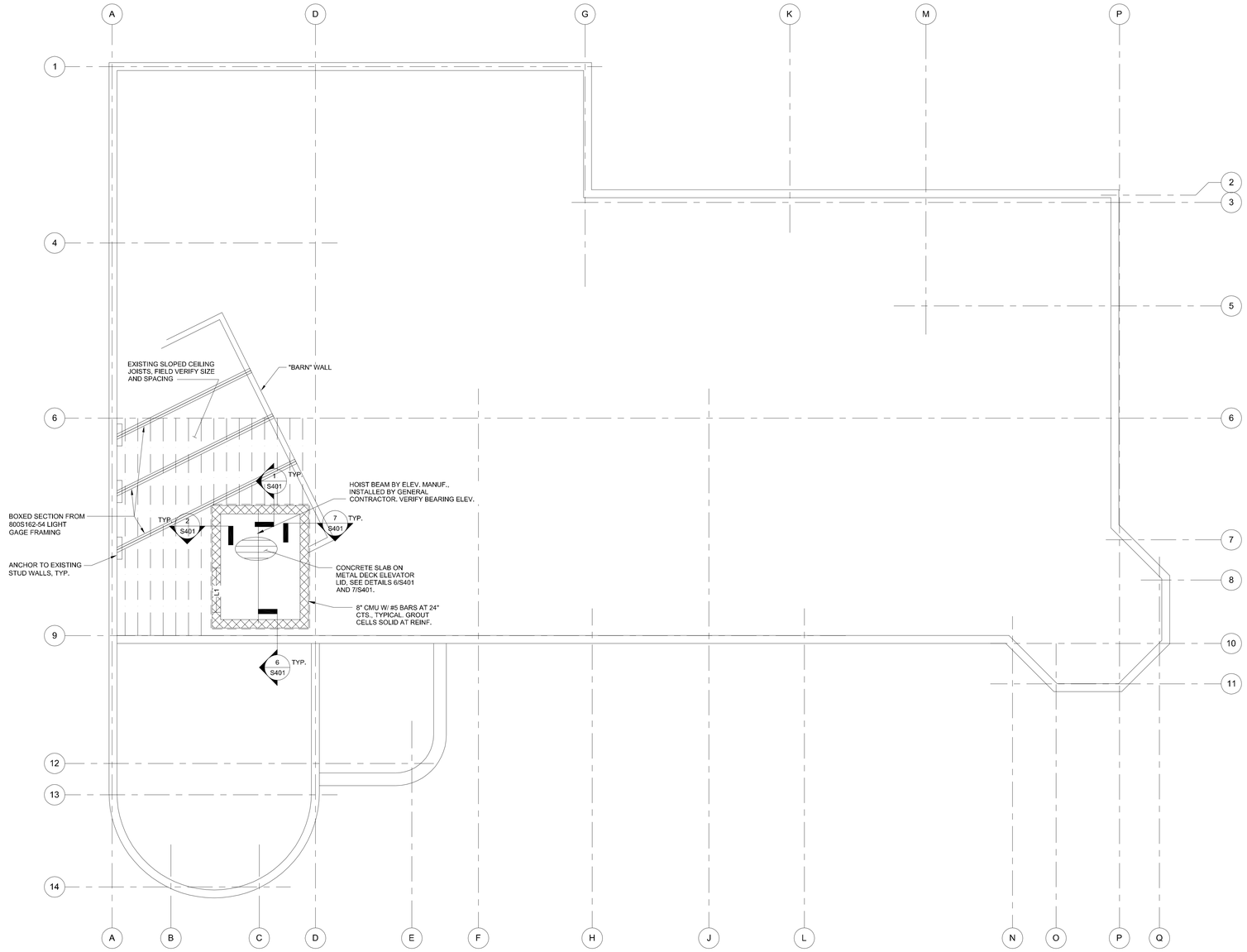

1 UPPER CEILING FRAMING PLAN
1/4" = 1'-0"

apaceDesign
architects
engineers
designers

apaceDesign
2112 East West Mansfield Drive
Peoria Illinois 61614
t:309.685.4722 f:309.685.4784
www.apaceDesign.com

HANSON
7625 N. University St., Suite 200
Peoria, Illinois 61614

© Copyright Hanson Professional Services Inc., 2014

UPPER CEILING FRAMING PLAN

Peoria PlayHouse Children's Museum
Peoria Park District
Glen Oak Park Pavillion
Peoria, IL 61603

NO.	ISSUE	DATE
1	Bidding Documents	3.19.14

NOT FOR CONSTRUCTION

DATE 03.19.14	PROJECT NO. 24905.02
DRAWN BY ABK	SHEET
CHECKED TND	S203
APPROVED TND	5 OF 8

I:\13JOBS\13L0143\CAD\STRUCT\SHEET\SHEETS.DWG MAR 19, 2014 9:08AM ZEIGLOO157

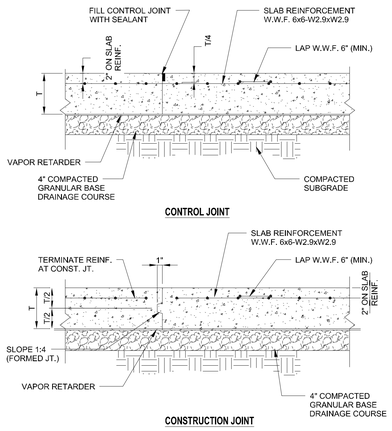

NOTES:
1. SEE PLAN FOR PLACEMENT OF JOINT LOCATIONS
2. CONSTRUCTION AND CONTROL JOINTS PARALLEL WITH THICKENED SLABS SHOULD OCCUR OUTSIDE THE LIMITS OF THE THICKENED SLAB.
3. MAXIMUM SPACING BETWEEN JOINTS = 12'-0" UNLESS OTHERWISE SHOWN.

1 TYPICAL SLAB-ON-GRADE
1" = 1'-0"

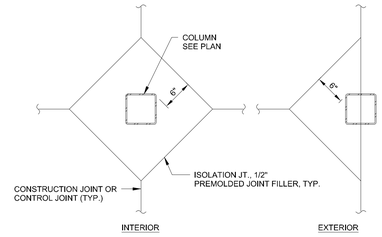

2 TYPICAL COLUMN ISOLATION JOINTS
1" = 1'-0"

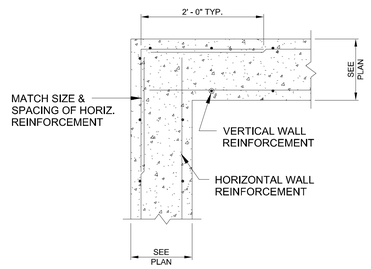

3 TYPICAL WALL CORNER
1" = 1'-0"

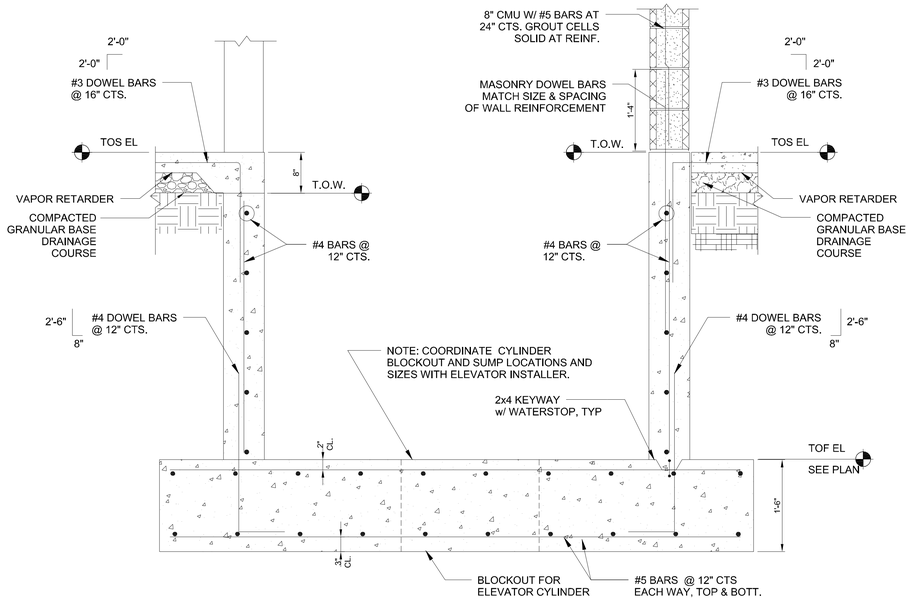

4 SECTION AT ELEVATOR PIT
1" = 1'-0"

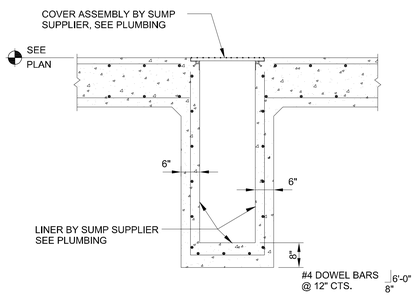

NOTES:
1. SUMP SHALL BE CAST MONOLITHIC WITH SLAB.

5 SECTION THRU ELEVATOR SUMP PIT
N.T.S.

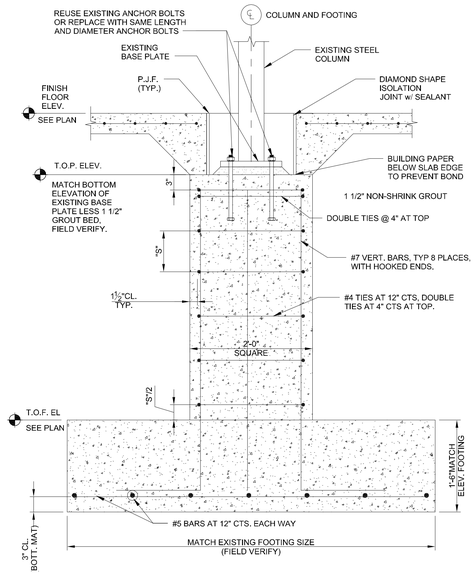

6 FOOTING AT COLUMN NEAR ELEVATOR
1" = 1'-0"

apaceDesign
architects
planners
designers
2115 East War Memorial Drive
Peoria, Illinois 61614
(309)685-4125 (309)686-4764
www.apacedesign.com

HANSON
7625 N. University St., Suite 200
Peoria, Illinois 61614

© Copyright Hanson Professional Services Inc., 2014

FOUNDATION DETAILS

Peoria PlayHouse Children's Museum
Peoria Park District
Glen Oak Park Pavillion
Peoria, IL 61603

NO.	ISSUE	DATE
1	Bidding Documents	3.19.14

NOT FOR CONSTRUCTION

DATE 03.19.14	PROJECT NO. 24905.02
DRAWN BY ABK	SHEET
CHECKED TND	S301
APPROVED TND	6 OF 8

J:\24905\13\07415\CD\STRUCT\SHEETS\SHEETS.DWG MAR 19, 2014 9:08AM TEDG0015

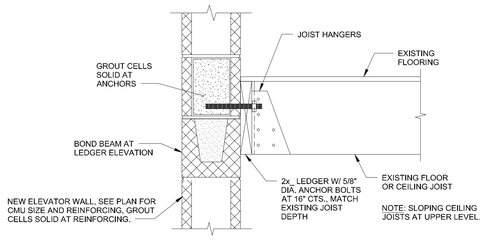

1 LEDGER AT ELEVATOR
11/2 " = 1'-0"

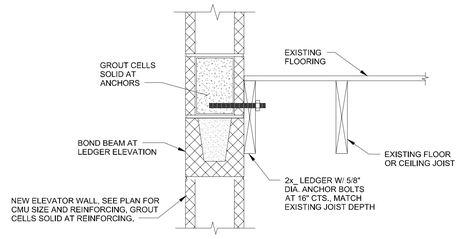

2 LEDGER AT ELEVATOR
11/2 " = 1'-0"

3 TYPICAL SISTER JOIST REPAIR DETAIL
1" = 1'-0"

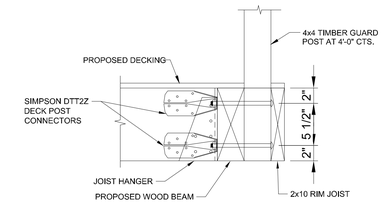

4 DETAIL AT PROPOSED LEVEL 3 GUARD POSTS
11/2 " = 1'-0"

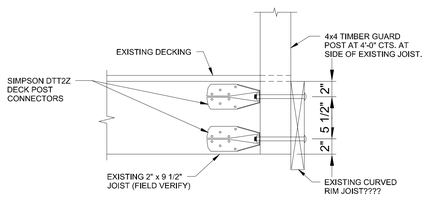

5 DETAIL AT EXISTING LEVEL 3 GUARD POSTS
11/2 " = 1'-0"

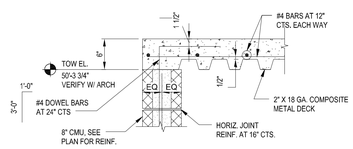

6 SECTION AT ELEVATER LID
1" = 1'-0"

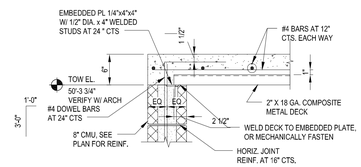

7 SECTION AT ELEVATER LID
1" = 1'-0"

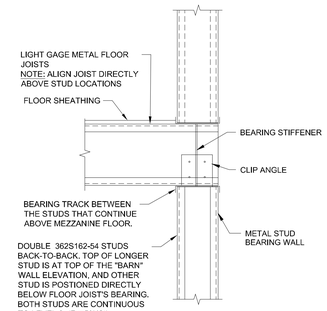

8 FLOOR SECTION
1" = 1'-0"

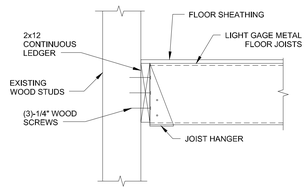

9 FLOOR SECTION
1" = 1'-0"

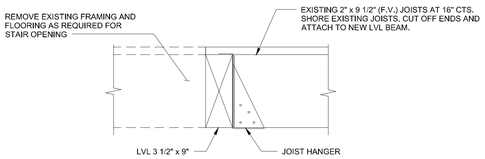

10 SECTION AT STAIR EDGE
1" = 1'-0"

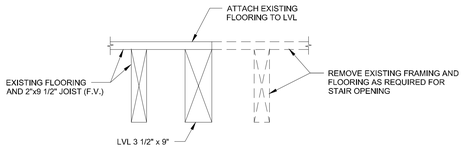

11 SECTION AT STAIR EDGE
1" = 1'-0"

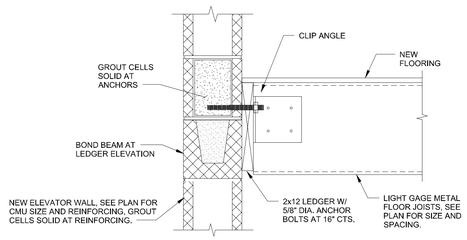

12 LEDGER AT ELEVATOR
1" = 1'-0"

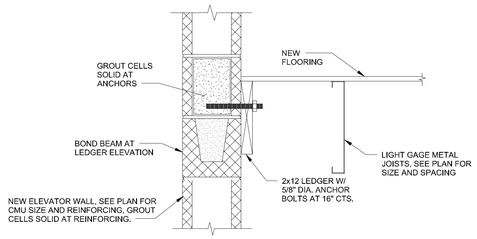

13 LEDGER AT ELEVATOR
11/2 " = 1'-0"

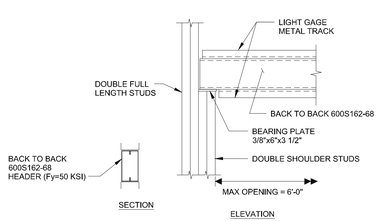

14 LIGHT GAGE METAL HEADER DETAIL
1" = 1'-0"

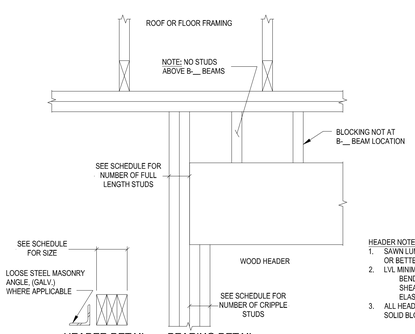

HEADER NOTES:
1. SAWN LUMBER: DOUGLAS FIR - LARCH NO. 2 OR BETTER
2. LVL MINIMUM STRESS VALUES:
   BENDING: Fb=2,600 PSI
   SHEAR: Fv=285 PSI
   ELAS. MODULE: E=1,800,000 PSI
3. ALL HEADERS BLOCKED TO WALL WIDTH W/ SOLID BLOCKING.

WOOD HEADER SCHEDULE

MARK	WOOD	
	SIZE	BEARING
WH-1	LVL 3 1/2" x 11 7/8"	2 CRIPPLE STUDS, MATCH EXISTING STUD SIZE
WH-2	LVL 3 1/2" x 5 1/2"	2 CRIPPLE STUDS, MATCH EXISTING STUD SIZE

15 WOOD FRAMING HEADER SCHEDULE AND DETAILS
1" = 1'-0"

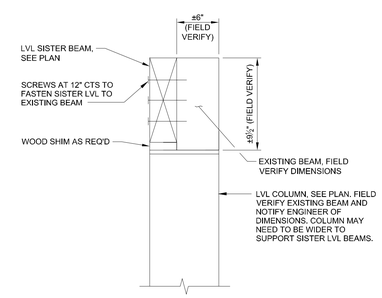

16 PROPOSED DETAIL AT TOP OF REMOVED AND REPLACED COLUMN
1 1/2" = 1'-0"

apacedesign
architects
planners
designers
2115 East War Memorial Drive
Peoria, Illinois 61614
(309)685-4125 (309)686-4764
www.apacedesign.com

HANSON
7625 N. University St., Suite 200
Peoria, Illinois 61614

© Copyright Hanson Professional Services Inc., 2014

FRAMING DETAILS

Peoria PlayHouse Children's Museum
Peoria Park District
Glen Oak Park Pavillion
Peoria, IL 61603

NO.	ISSUE	DATE
1	Bidding Documents	3.19.14

DATE 03.19.14	PROJECT NO. 24905.02
DRAWN BY ABK	SHEET
CHECKED TND	S401
APPROVED TND	7 OF 8

NOT FOR CONSTRUCTION

A:\24905\1.02\DATA\CAD\STRUCT\SHEETS\SHEETS.DWG MAR 19, 2014 9:08AM TEDGLDOUGS

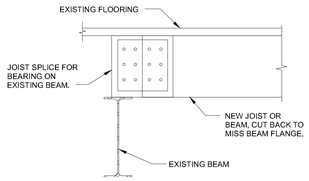

1 DETAIL AT NEW BEARING WALL
1" = 1'-0"

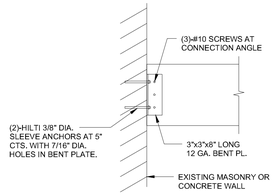

2 JOIST BEARING DETAIL
1" = 1'-0"

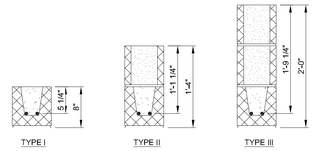

3 JOIST CONNECTION TO EXISTING WALL
1" = 1'-0"

NOTES:
1. USE TYPE II FOR INTERIOR NON-LOAD BEARING WALLS WITH MASONRY OPENINGS LESS THAN 8'-0" NOT INDICATED ON PLANS. REINFORCEMENT = 2-#4 BARS.
2. MINIMUM BEARING LENGTH FOR LOOSE LINTELS IS 8".
3. ALL STEEL LINTELS AT EXTERIOR WALL LOCATIONS SHALL BE GALVANIZED IN ACCORDANCE WITH ASTM DESIGNATION A123.
4. COORDINATE OPENING LOCATIONS WITH ARCHITECTURAL, MECHANICAL, AND PLUMBING DRAWINGS.

MARK NO.	TYPE	REINF./MEMBER
L1	I	2-#5 BARS
L2	II	2-#5 BARS
L3	III	2-#5 BARS

4 LINTEL SCHEDULE

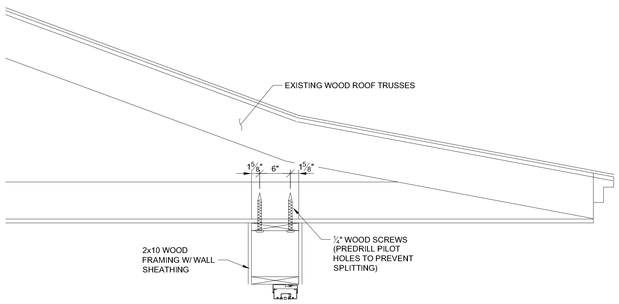

5 SECTION THRU SAND PORCH
½" = 1'-0"

apacedesign
architects
engineers
designers
apacedesign
2115 East War Memorial Drive
Peoria, Illinois 61614
(309) 685-4123 (309) 685-4784
www.apacedesign.com

HANSON
7625 N. University St., Suite 200
Peoria, Illinois 61614

© Copyright Hanson Professional Services Inc., 2014

FRAMING DETAILS

Peoria PlayHouse Children's Museum
Peoria Park District
Glen Oak Park Pavillion
Peoria, IL 61603

NO.	ISSUE	DATE
1	Bidding Documents	3.19.14

NOT FOR CONSTRUCTION

DATE 03.19.14	PROJECT NO. 24905.02
DRAWN BY ABK	SHEET
CHECKED TND	S402
APPROVED TND	8 OF 8

A:\13-0265\12-0743\CAD\STRUCT\SHEETS\SHEETS.DWG MAR 19, 2014 9:08AM ZOGLMANN

ROOM FINISH SCHEDULE

Level	No.	ROOM NAME	FLOOR		WALLS								CEILING		REMARKS
					NORTH		EAST		SOUTH		WEST				
			MATERIAL/ FINISH	BASE	MATERIAL	FINISH	MATERIAL	FINISH	MATERIAL	FINISH	MATERIAL	FINISH	MATERIAL/ FINISH	HEIGHT	
LEVEL 1	001	ART ROOM	VCT-1 / VCT-2	RB-2	GB	PNT-3	GB	PNT-3	GB	PNT-3	GB	PNT-3	SAT	10'-0"	--
LEVEL 1	002	ELEC. CLOSET	VCT-3	RB-1	GB	PNT-14	GB	PNT-14	GB	PNT-14	GB	PNT-14	GB / PNT-14	VARIES	--
LEVEL 1	003	HALL	RUB	RB-6	GB	PNT-7	GB	PNT-7	--	--	GB	PNT-7	EXP. / PNT-13	12'-0"	--
LEVEL 1	004	WOMEN'S RESTROOM	P.T.	P.T.	T.BB. / G.B.	C.T. / PNT-5	T.BB. / G.B.	C.T. / PNT-5	T.BB. / G.B.	C.T. / PNT-5	T.BB. / G.B.	C.T. / PNT-5	S.A.T.	8'-0"	C.T. WAINSCOT TO 5'-0" A.F.F., PNT. ABOVE.
LEVEL 1	005	(NOT USED)	--	--	--	--	--	--	--	--	--	--	--	--	--
LEVEL 1	006	MEN'S RESTROOM	P.T.	P.T.	T.BB. / G.B.	C.T. / PNT-3	T.BB. / G.B.	C.T. / PNT-3	T.BB. / G.B.	C.T. / PNT-3	T.BB. / G.B.	C.T. / PNT-3	S.A.T.	8'-0"	C.T. WAINSCOT TO 5'-0" A.F.F., PNT. ABOVE.
LEVEL 1	007	HALL	RUB	RB-6	GB	PNT-7	GB	--	--	--	GB	PNT-7	EXP. / PNT-13	12'-0"	--
LEVEL 1	008	PROGRAM ROOM B	VCT-1 / VCT-2 / VCT-3	RB-1	GB	PNT-9	GB	PNT-9	GB	PNT-9	GB	PNT-9	SAT	10'-0"	--
LEVEL 1	009	PROGRAM ROOM A	VCT-1 / VCT-2 / VCT-3	RB-1	GB	PNT-8	GB	PNT-8	GB	PNT-8	GB	PNT-8	SAT	10'-0"	--
LEVEL 1	009A	STAGE	VCT-3	RB-1	GB	PNT-8	GB	--	--	--	--	--	SAT	10'-0"	--
LEVEL 1	009B	ALCOVE	VCT-3	RB-1	--	--	GB	PNT-8	GB	PNT-8	GB	PNT-8	GB / PNT-14	8'-0"	--
LEVEL 1	010	STORAGE	VCT-3	RB-1	GB	PNT-8	GB	PNT-8	GB	PNT-8	GB	PNT-8	SAT	10'-0"	--
LEVEL 1	011	MECHANICAL ROOM	CONC.	--	EXIST.	PNT-14	EXIST.	PNT-14	EXIST.	PNT-14	EXIST.	PNT-14	EXP. / PNT-13	EXIST.	--
LEVEL 1	012	MECHANICAL	CONC.	--	EXIST.	PNT-14	EXIST.	PNT-14	EXIST.	PNT-14	EXIST.	PNT-14	EXP. / PNT-13	EXIST.	--
LEVEL 1	013	FACE PAINT	RSF-8	RB-11	GB	PNT-1 / PNT-3	GB	PNT-3	GB	PNT-3	GB	PNT-3	EXP. / PNT-13	12'-0"	--
LEVEL 1	014	MINE CONTROL	CPT.T.-1	RB-9 / RB-12	--	--	GB	PNT-14	GB	PNT-2 / PNT-13	--	--	EXP. / PNT-13	12'-0"	--
LEVEL 1	015	SCIENCE	VCT-3	RB-1 / RB-7	GB	PNT-2	GB	PNT-2	GB	PNT-2	GB	PNT-2/PNT-5/PNT-11	EXP. / PNT-13	12'-0"	MULTIPLE COLORS OF CPT.T.
LEVEL 1	016	PEORIA	CPT.T.-1 / CPT.T.-2	RB-9	GB	PNT-4 / PNT-10	GB	PNT-2	--	--	--	--	EXP. / PNT-13	12'-0"	MULTIPLE COLORS OF CPT.T.
LEVEL 1	017	(NOT USED)	--	--	--	--	--	--	--	--	--	--	--	--	--
LEVEL 1	018	MOTION COMMOTION	RUB	RB-6	GB	PNT-2	GB	PNT-5	GB	PNT-5	GB	PNT-5	EXP. / PNT-13	12'-0"	--
LEVEL 1	019	ELEVATOR	CPT.T.-3	MANUF.	MANUF.	MANUF.	MANUF.	MANUF.	MANUF.	MANUF.	MANUF.	MANUF.	NO CLNG.	--	--
LEVEL 1	020	WATER	CHT / RUB	RB-8 / RB-9	GB	PNT-3	CMU	PNT-2	GB / CMU	PNT-2	GB	PNT-3	EXP. / PNT-13	12'-0"	--
LEVEL 1	021	TOP SPOT	CPT.T.-1 / VCT-3	RB-9 / RB-1	--	--	GB	--	--	--	--	--	EXP. / PNT-13	12'-0"	--
LEVEL 1	022	TRAIN	RUB	--	--	--	--	PNT-13	GB	PNT-13	--	--	EXP. / PNT-13	12'-0"	--
LEVEL 2	100	HOUSE	RSF-1 / RSF-2	RB-1	EXIST.	PNT-1 / PNT-2	GB	--	--	--	EXIST.	PNT-1 / PNT-2	GB / PNT-14	9'-4"	--
LEVEL 2	101	STAIR	RUB	RB-6	EXIST.	PNT-7 / PNT-8	GB	PNT-7 / PNT-3	GB	PNT-3	GB	PNT-7 / PNT-3	GB / PNT-14	9'-4"	9'-4" CLNG. ABOVE UPPER LANDING.
LEVEL 2	102	TICKETING	RSF-3	RB-2	EXIST. / GB	PNT-3	GB	--	--	--	--	--	OPEN	OPEN	EXIST. PLASTER CLNG. 23'-10" TO HIGHEST POINT.
LEVEL 2	103	EXHIBIT AREA	RSF-1 / -3 / -4 / -5 RSF-6 / -7 / -8	RB-8 / RB-2	--	--	GB	PNT-3	EXIST.	PNT-3	--	--	OPEN	OPEN	MULTIPLE COLORS OF RSF. EXIST. PLASTER CLNG. 23'-10" TO HIGHEST POINT.
LEVEL 2	104	RETAIL	RSF-6	RB-2	EXIST.	PNT-8	EXIST. / GB	PNT-8	EXIST. / GB	PNT-8	GB	PNT-8	SAT	10'-0"	--
LEVEL 2	105	STORAGE	VCT-3	RB-1	GB	PNT-14	EXIST.	PNT-14	GB	PNT-14	EXIST.	PNT-14	GB / PNT-14	10'-0"	--
LEVEL 2	106	STAIR	EXIST.	--	EXIST.	--	EXIST.	--	EXIST.	--	EXIST.	--	EXIST. / EXIST.	EXIST.	--
LEVEL 2	107	REAL BUILDING	VCT-3	RB-2	GB	PNT-2	EXIST.	PNT-2	EXIST.	PNT-2	GB	PNT-2	EXIST. / PNT-13	12'-9"	--
LEVEL 2	108	PORCH	EXIST.	--	--	--	--	--	EXIST.	--	EXIST.	--	EXIST. / EXIST.	EXIST.	--
LEVEL 2	109	SAND PORCH	R.T.	RB-7	EXIST. / GB	PNT-14	GB	PNT-14	GB	PNT-14	EXIST. / GB	PNT-14	EXIST. / PNT-14	EXIST.	--
LEVEL 2	110	TODDLER	VCT-3	RB-1	GB	--	GB	PNT-2 / PNT-3	EXIST.	PNT-2 / PNT-3	GB	PNT-2	EXIST. / PNT-13	12'-9"	--
LEVEL 2	111	CLEAN-UP	CHT-2 / R.T.	RB-7	EXIST.	--	--	--	--	--	--	--	EXIST. / PNT-14	EXIST.	--
LEVEL 2	112	PORCH	EXIST	--	EXIST.	--	--	--	--	--	EXIST.	--	EXIST. / EXIST.	EXIST.	--
LEVEL 2	113	STAIR	EXIST.	--	EXIST.	--	EXIST.	--	EXIST.	--	EXIST.	--	EXIST. / EXIST.	EXIST.	--
LEVEL 2	114	FAMILY TOILET	P.T.	P.T.	T.BB. / G.B.	C.T. / PNT-8	T.BB. / G.B.	C.T. / PNT-8	T.BB. / G.B.	C.T. / PNT-8	T.BB. / G.B.	C.T. / PNT-8	GB / PNT-14	8'-0"	--
LEVEL 2	115	BARN	CPT.T.-1 / RSF-4	RB-4 / RB-5	CMU	PNT-5	EXIST.	PNT-6	EXIST.	PNT-6	EXIST.	PNT-5 / PNT-6	EXHIBIT	12'-9"	--
LEVEL 2	116	CHICKEN COOP	CPT.T.-1 / RSF-4	RB-4	GB	PNT-5	GB	PNT-5	CMU	PNT-5	EXIST.	PNT-5	EXHIBIT	9'-4"	--
LEVEL 2	117	PORCH	EXIST.	--	--	--	EXIST.	--	--	--	--	--	EXIST. / EXIST.	EXIST.	--
LEVEL 2	118	OFFICE	CPT.T.-2	RB-7	EXIST. / GB	PNT-11	GB	PNT-11	GB	PNT-11	GB	PNT-9	SAT	9'-0"	--
LEVEL 3	200	MEZZANINE	CPT.T.-3	RB-13	EXIST.	PNT-8	EXIST.	PNT-3	GB	PNT-3	EXIST.	PNT-3	EXIST. / PNT-3	VARIES	--
LEVEL 3	201	STAIR	RUB	RB-6	EXIST.	PNT-8	EXIST.	PNT-3	GB	PNT-3	GB	PNT-3	EXIST. / PNT-3	VARIES	--
LEVEL 3	202	EXHIBIT AREA (BELOW)	--	--	EXIST. / GB	PNT-3	EXIST. / GB	PNT-3	EXIST.	PNT-3	GB / CMU	PNT-3	EXIST. / PNT-3	VARIES	--
LEVEL 3	203	(NOT USED)	--	--	--	--	--	--	--	--	--	--	--	--	--
LEVEL 3	204	(NOT USED)	--	--	--	--	--	--	--	--	--	--	--	--	--
LEVEL 3	205	STORAGE	EXIST.	EXIST.	EXIST.	EXIST.	EXIST.	EXIST.	EXIST.	EXIST.	EXIST.	EXIST.	EXIST.	EXIST.	--
LEVEL 3	206	CLOSET	EXIST.	EXIST.	EXIST.	EXIST.	EXIST.	EXIST.	EXIST.	EXIST.	EXIST.	EXIST.	EXIST.	EXIST.	--
LEVEL 3	207	CLOSET	EXIST.	EXIST.	EXIST.	EXIST.	EXIST.	EXIST.	EXIST.	EXIST.	EXIST.	EXIST.	EXIST.	EXIST.	--
LEVEL 3	208	CLOSET	EXIST.	EXIST.	EXIST.	EXIST.	EXIST.	EXIST.	EXIST.	EXIST.	EXIST.	EXIST.	EXIST.	EXIST.	--
LEVEL 3	209	STAIR	EXIST.	EXIST.	EXIST.	EXIST.	EXIST.	EXIST.	EXIST.	EXIST.	EXIST.	EXIST.	EXIST.	EXIST.	--
LEVEL 3	210	STORAGE	EXIST.	EXIST.	EXIST.	EXIST.	EXIST.	EXIST.	EXIST.	EXIST.	EXIST.	EXIST.	EXIST.	EXIST.	--
LEVEL 3	211	TOILET	EXIST.	EXIST.	EXIST.	EXIST.	EXIST.	EXIST.	EXIST.	EXIST.	EXIST.	EXIST.	EXIST.	EXIST.	--
LEVEL 3	212	CLOSET	EXIST.	EXIST.	EXIST.	EXIST.	EXIST.	EXIST.	EXIST.	EXIST.	EXIST.	EXIST.	EXIST.	EXIST.	--
LEVEL 3	213	STORAGE	EXIST.	EXIST.	EXIST.	EXIST.	EXIST.	EXIST.	EXIST.	EXIST.	EXIST.	EXIST.	EXIST.	EXIST.	--
LEVEL 3	214	MECHANICAL	EXIST.	EXIST.	EXIST.	EXIST.	EXIST.	EXIST.	EXIST.	EXIST.	EXIST.	EXIST.	EXIST.	EXIST.	--
LEVEL 3	215	STAIR	EXIST.	EXIST.	EXIST.	EXIST.	EXIST.	EXIST.	EXIST.	EXIST.	EXIST.	EXIST.	EXIST.	EXIST.	--
LEVEL 3	216	ELECTRICAL	EXIST.	EXIST.	EXIST.	EXIST.	EXIST.	EXIST.	EXIST.	EXIST.	EXIST.	EXIST.	EXIST.	EXIST.	--
LEVEL 3	217	STORAGE	EXIST.	EXIST.	EXIST.	EXIST.	EXIST.	EXIST.	EXIST.	EXIST.	EXIST.	EXIST.	EXIST.	EXIST.	--
LEVEL 3	218	QUIET PLACE	CPT.T.-3	RB-13	GB	PNT-3	GB	PNT-5 / PNT-3	EXIST. / GB / CMU	PNT-5 / PNT-3	EXIST.	PNT-3	EXIST. / PNT-14	VARIES	--

FINISH ABBREVIATIONS:

CMU = CONCRETE MASONRY UNIT
B.O. = BY OTHERS
CHT = CHANNEL TILE
CPT.T. = CARPET TILE
C.T. = CERAMIC TILE
EXIST. = EXISTING
G.B. = GYPSUM BOARD
GL. = GLAZED
PNT. = PAINT
P.T. = PORCELAIN TILE
RB = RESILIENT BASE
RSF = RESILIENT SHEET FLOORING
R.T. = RUBBER TILE
RUB = RUBBER FLOORING
S.A.T. = SUSPENDED ACOUSTICAL TILE
T.BB. = TILE BACKER BOARD
VCT = VINYL COMPOSITION TILE

BUILDING CODE REVIEW - 2006 INTERNATIONAL BUILDING CODE

- USE GROUP: A-3, ASSEMBLY
- TYPE OF CONSTRUCTION - "3B," COMBUSTIBLE / NON-COMBUSTIBLE, UNPROTECTED
- BUILDING AREA:
  - LEVEL 1: 7713 SQ. FT.
  - LEVEL 2: 4301 SQ. FT.
  - LEVEL 3: 1275 SQ. FT.
  - TOTAL: 13,289 GROSS SQ. FT.
  - ALLOWABLE AREA (PER TABLE 503): 9,500 SQ. FT./FLR. + 200% INCREASE FOR SPRINKLER SYSTEM = 28,500 SQ. FT. / FLR. ALLOWABLE
  - ALLOWABLE HEIGHT (PER TABLE 503): 3 STORIES ABOVE GRADE OR 75 FT. ABOVE GRADE
- FULLY SPRINKLED BUILDING
- FIRE ALARM AND DETECTION SYSTEM
- EXIT ACCESS TRAVEL DISTANCE: MAX. 250'-0"
- DEAD END CORRIDOR LENGTH: LESS THAN 20'-0"
- MEZZANINE MAX. POPULATION = 541 S.F./20 S.F. PER PERSON = 27 PEOPLE
- MEZZANINE ALLOWED TO HAVE ONE EXIT WITH TRAVEL DISTANCE NO GREATER THAN 75 FEET.

GOVERNING ENERGY CONSERVATION CODE: 2012 INTERNATIONAL / ILLINOIS ENERGY CONSERVATION CODE

IECC ROOF AND WALL INSULATION MIN. REQUIREMENTS, BUILDING DESIGN MEETS OR EXCEEDS THESE REQUIREMENTS.

CLIMATE ZONE 5

- ROOF: R-38 ATTIC AND OTHER
- WALLS ABOVE GRADE: R-20 WOOD FRAMED
- UNHEATED SLABS: R-10 FOR 24" BELOW
- OPAQUE DOORS: U-0.37
- FIXED WINDOWS: U-0.38
- OPERABLE WINDOWS: U-0.45
- ENTRANCE DOORS: U-0.77
- SHGC FOR GLAZING: U-0.40
- MAX. AIR INFILTRATION FOR FENESTRATION ASSEMBLIES
  - WINDOWS - 0.20 CFM/S.F.
  - SWING DOORS - 0.20 CFM/S.F.
  - STOREFRONT - 0.06 CFM/S.F.
  - COMMERCIAL GLAZED SWING ENTRANCE DOORS - 1.00 CFM/S.F.

TOILET ACCESSORY, SIGNAGE AND FIRE EXTINGUISHER CABINET MOUNTING SCHEDULE

SCALE : 1/2" = 1'-0"

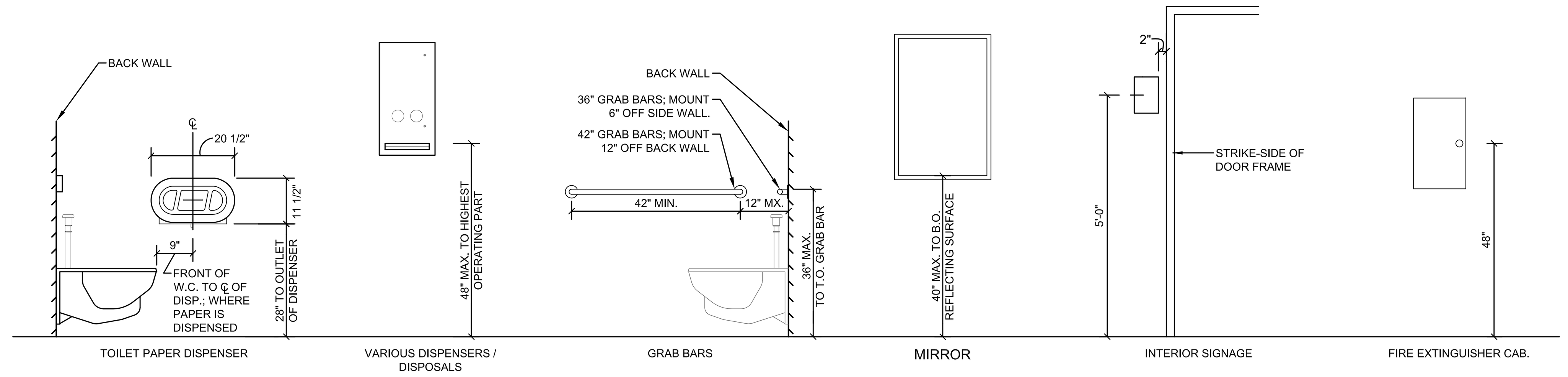

ACCESSORIES NOTES:

1. ALL RESTOOM ACCESSORIES TO BE OWNER-PROVIDED AND CONTRACTOR-INSTALLED, U.O.N.; SEE SPECIFICATIONS.
2. PROVIDE WD. OR STL. BLKNG. AS REQ'D. AT ALL ITEMS MOUNTED ON OR IN STUD WALLS.
3. MOUNT TOILET PAPER DISPENSER 3" ABOVE GRAB BAR IN A.D.A. STALL; SAME 9" DISTANCE FROM WATER CLOSET.

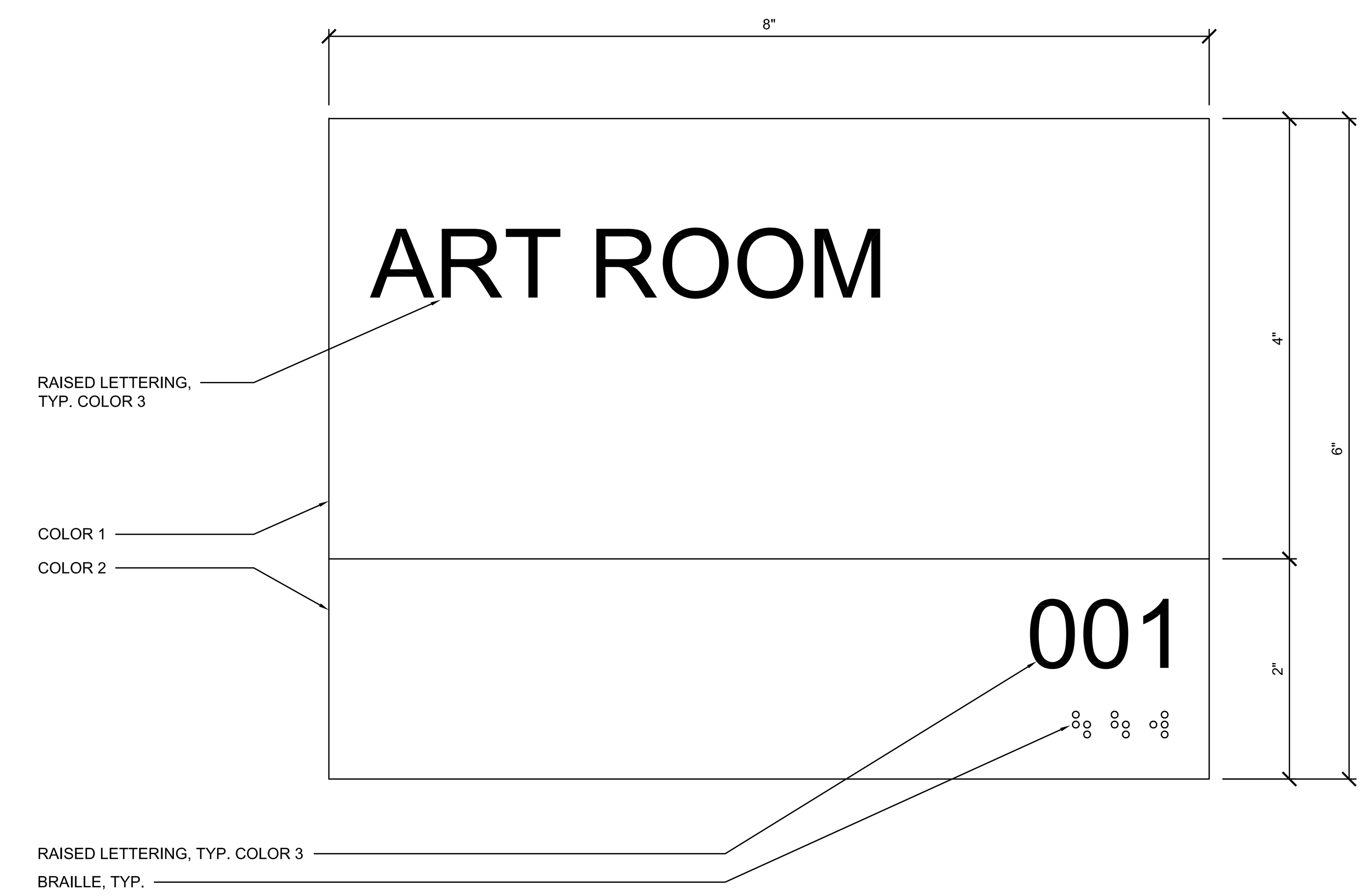

1 / A000 TYP. ROOM SIGNAGE DETAIL
SCALE: FULL SIZE

apaceDesign
architects engineers designers
2112 East War Memorial Drive
Peoria Illinois 61614
t:309.685.4722 f:309.685.4784
www.apaceDesign.com

Room Finish Schedule

Peoria PlayHouse Children's Museum
Peoria Park District
Glen Oak Park Pavillion
Peoria, IL 61603

NO.	ISSUE	DATE
1	Bidding Documents	3.19.14

DATE: 3.19.14
PROJECT NO.: 24905.02
DRAWN BY: BLK / KRM
CHECKED: BLK
APPROVED: SJM
CODE
SHEET A000
1 OF 24

DOOR SCHEDULE

No.	DOOR MATERIAL/ FINISH	WIDTH	HEIGHT	THICKNESS	TYPE DOOR	TYPE FRAME/ FINISH	GLAZING	REMARKS
01	INSUL. H.M./PNT.	3'-6"	7'-0"	1-3/4"	D2	2 / PNT.	INSUL./SAFETY	FIELD VERIFY EXISTING CONDITIONS/DIMENSIONS
02	INSUL. H.M./PNT.	3'-0"	7'-0"	1-3/4"	D2	1 / PNT.	INSUL./SAFETY	FIELD VERIFY EXISTING CONDITIONS/DIMENSIONS
03	INSUL. H.M./PNT.	3'-0"	7'-0"	1-3/4"	D1	1 / PNT.	--	FIELD VERIFY EXISTING CONDITIONS/DIMENSIONS
04	INSUL. H.M./PNT.	2'-8"	7'-0"	1-3/4"	D1	1 / PNT.	--	FIELD VERIFY EXISTING CONDITIONS/DIMENSIONS
05	H.M./PNT.	(2) 3'-0"	7'-0"	1-3/4"	D2	1 / PNT.	SAFETY	--
06	H.M./PNT.	3'-0"	7'-0"	1-3/4"	D1	1 / PNT.	--	12"X18" LOUVER
07	H.M./PNT.	3'-0"	7'-0"	1-3/4"	D1	1 / PNT.	--	--
08	H.M./PNT.	3'-0"	7'-0"	1-3/4"	D1	1 / PNT.	--	12"X18" LOUVER
09	H.M./PNT.	3'-0"	7'-0"	1-3/4"	D2	1 / PNT.	SAFETY	--
10	H.M./PNT.	3'-0"	7'-0"	1-3/4"	D2	1 / PNT.	SAFETY	--
11	H.M./PNT.	3'-0"	7'-0"	1-3/4"	D1	1 / PNT.	--	--
12	H.M./PNT.	3'-0"	7'-0"	1-3/4"	D1	1 / PNT.	--	--
13	H.M./PNT.	(2) 3'-0"	7'-0"	1-3/4"	D2	1 / PNT.	SAFETY	--
14	H.M./PNT.	(2) 3'-0"	7'-0"	1-3/4"	D2	1 / PNT.	SAFETY	--
15	MANUF./MANUF.	3'-6"	7'-0"	MANUF.	MANUF.	MANUF.	--	--
100	ALUM./MANUF.	3'-0"	7'-0"	MANUF.	D3	MANUF./MANUF.	INSUL./SAFETY	--
101	ALUM./MANUF.	3'-0"	7'-0"	MANUF.	D3	MANUF./MANUF.	INSUL./SAFETY	--
102	H.M./PNT.	3'-0"	7'-0"	1-3/4"	D1	1 / PNT.	--	--
103	H.M./PNT.	2'-8"	7'-0"	1-3/4"	D1	1 / PNT.	--	--
104	H.M./PNT.	2'-6"	7'-0"	1-3/4"	D1	1 / PNT.	--	FIELD VERIFY EXISTING CONDITIONS/DIMENSIONS
105	H.M./PNT.	3'-0"	7'-0"	1-3/4"	D2	1 / PNT.	--	--
106	H.M./PNT.	3'-0"	7'-0"	1-3/4"	D2	2 / PNT.	--	FIELD VERIFY EXISTING CONDITIONS/DIMENSIONS
107	ALUM./MANUF.	3'-0"	7'-0"	MANUF.	D3	MANUF./MANUF.	INSUL./SAFETY	--
108	ALUM./MANUF.	3'-0"	7'-0"	MANUF.	D3	MANUF./MANUF.	INSUL./SAFETY	--
109	H.M./PNT.	3'-0"	7'-0"	1-3/4"	D2	2 / PNT.	--	FIELD VERIFY EXISTING CONDITIONS/DIMENSIONS
110	H.M./PNT.	3'-0"	7'-0"	1-3/4"	D1	1 / PNT.	--	10"x10" LOUVER
111	MANUF./MANUF.	3'-6"	7'-0"	MANUF.	MANUF.	MANUF.	--	--
112	INSUL. H.M./PNT.	3'-0"	7'-0"	1-3/4"	D2	1 / PNT.	INSUL./SAFETY	FIELD VERIFY EXISTING CONDITIONS/DIMENSIONS
113	INSUL. H.M./PNT.	3'-0"	7'-0"	1-3/4"	D2	1 / PNT.	INSUL./SAFETY	FIELD VERIFY EXISTING CONDITIONS/DIMENSIONS
200	H.M./PNT.	3'-0"	4'-0"	1-3/4"	D1	1 / PNT.	--	--
201	H.M./PNT.	3'-6"	7'-0"	1-3/4"	D1	1 / PNT.	--	--
202	MANUF./MANUF.	3'-6"	7'-0"	MANUF.	MANUF.	MANUF.	--	--
203	H.M./PNT.	3'-0"	7'-0"	1-3/4"	D1	1 / PNT.	--	--
204	H.M./PNT.	2'-0"	4'-0"	1-3/4"	D1	1 / PNT.	--	--

FRAME PROFILES:

3" = 1'-0"

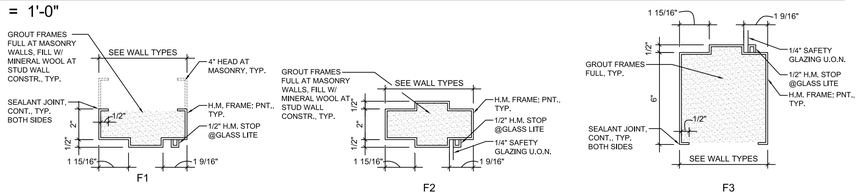

DOOR AND FRAME TYPES:

1/4" = 1'-0"

NOTE: ALL H.M. DOORS AND FRAMES TO BE PAINTED U.O.N.

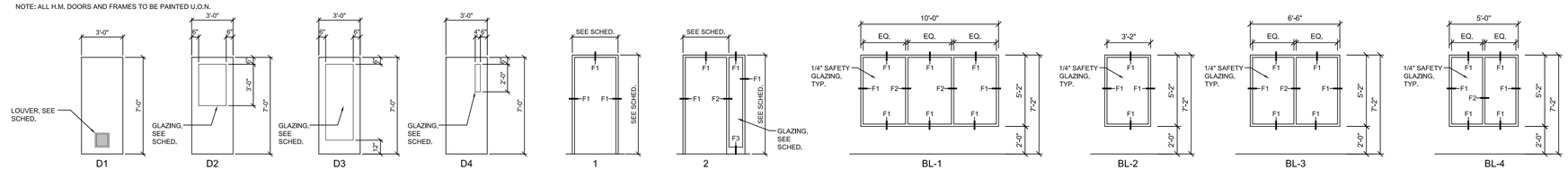

ALUMINUM STOREFRONT ELEVATIONS:

1/4" = 1'-0"

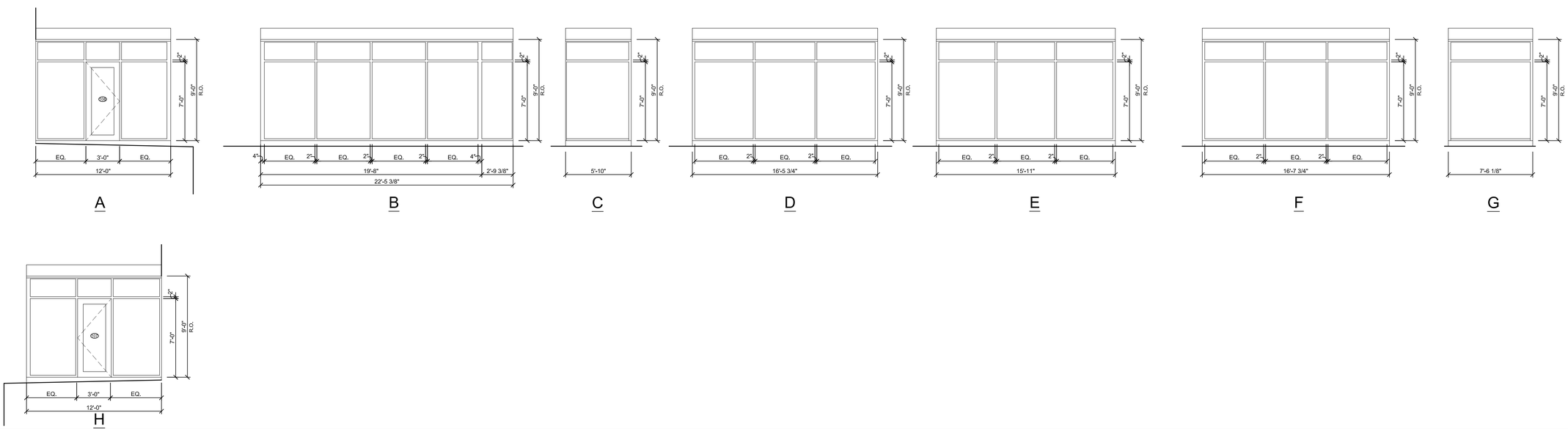

WALL TYPES

1 1/2" = 1'-0"

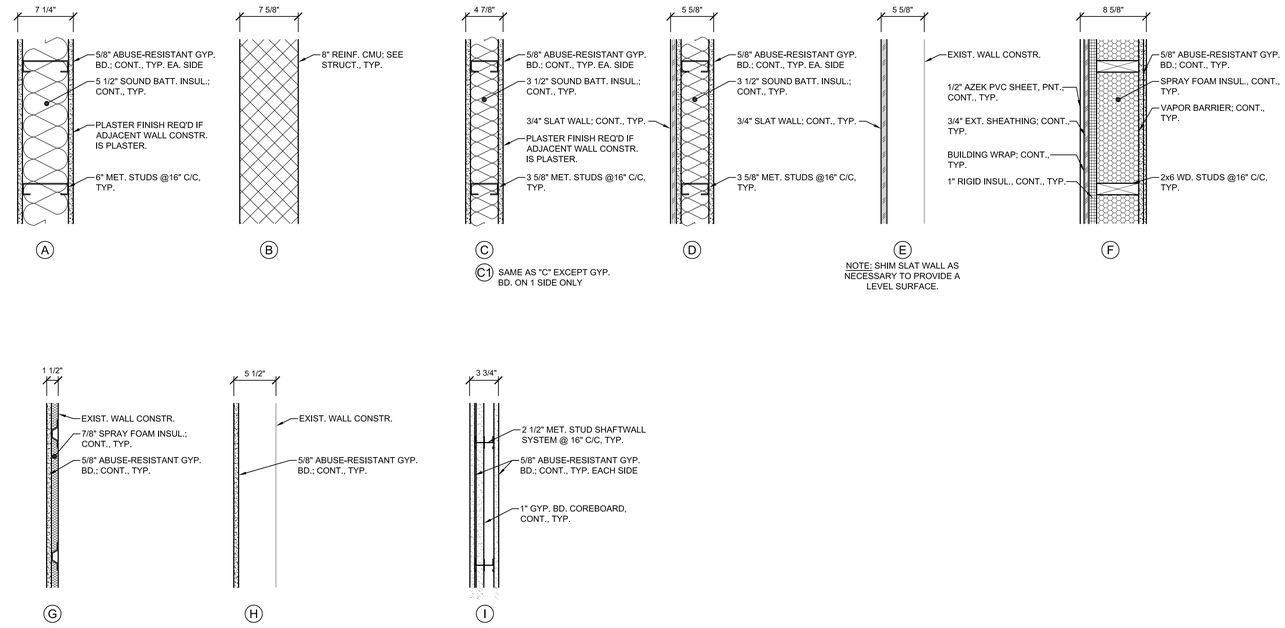

C1 SAME AS "C" EXCEPT GYP. BD. ON 1 SIDE ONLY

NOTE: SHIM SLAT WALL AS NECESSARY TO PROVIDE A LEVEL SURFACE.

apacedesign
architects 24102 Fisher Memorial Drive
Peoria, Arizona 85382
engineers phone 623.866.4139
planners www.apacedesign.com

Wall Types, Schedules, and Details

Peoria PlayHouse Children's Museum
Peoria Park District
Glen Oak Park Pavillion
Peoria, IL 61603

NO.	ISSUE	DATE
1	Bidding Documents	3.19.14

DATE 3.19.14	PROJECT NO. 24905.02
DRAWN BY BLK	SHEET
CHECKED BLK	A001
APPROVED SJM	2 OF 24

CODE

DEMOLITION KEYED NOTES: (APPLY TO THIS SHEET ONLY)

01 = REMOVE EXIST. WALL CONSTRUCTION TO EXTENTS SHOWN.

02 = REMOVE EXIST. DOOR AND FRAME IN ITS ENTIRETY.

03 = REMOVE EXIST. CMU VAULT CONSTRUCTION IN ITS ENTIRETY. VAULT CEILING IS APPROX. 12"-THK. AND HAS THICKENED SLAB AND FOUNDATION.

04 = REMOVE EXIST. MASONRY CHIMNEY IN ITS ENTIRETY.

05 = REMOVE EXIST. FURRED WALL CONSTRUCTION TO EXTENTS SHOWN.

06 = REMOVE EXIST. OPERABLE PARTITION IN ITS ENTIRETY.

07 = REMOVE EXIST. STAIR CONSTRUCTION IN ITS ENTIRETY.

08 = REMOVE EXIST. SINK, LAVATORY, TOILET, OR OTHER PLUMBING FIXTURE; COORDINATE WITH PLUMBING.

09 = REMOVE EXIST. TOILET PARTITIONS IN THEIR ENTIRETY.

10 = REMOVE EXIST. S.A.T. CEILING IN ITS ENTIRETY.

11 = REMOVE EXIST. WOOD SIDING CEILING IN ITS ENTIRETY.

12 = CONC. SLAB TO REMAIN AT EXIST. ELEC. PANELS, FIELD VERIFY TO MINIMUM DIMENSIONS NECESSARY.

13 = REMOVE ANY EXIST. MECH. UNITS, LOUVERS, FANS OR OTHER PENETRATIONS FROM WINDOW UNIT. PROVIDE TEMPORARY WEATHERTIGHT ENCLOSURE. COORD. REMOVAL W/ MECH.

14 = CONTRACTOR TO CAREFULLY REMOVE AND SALVAGE ALL EXIST. MET. CEILING TILES. APPROX. 1800 SQ. FT. TURN OVER TO OWNER.

15 = REMOVE EXIST. CMU/WALL CONSTR. AS NECESSARY TO ACCOMMODATE NEW LOUVER. COORD. W/ MECH.

16 = EXCAVATE EARTH AS NECESSARY TO INSTALL NEW AREAWAY.

LEGEND: APPLIES TO THIS SHEET ONLY

= EXIST. WALL CONSTRUCTION TO REMAIN

= EXIST. WALL CONSTRUCTION TO BE REMOVED IN THEIR ENTIRETY; COORD. WITH REVISED PLANS

= EXISTING REINF. CONC. SLAB CONSTR. TO BE REMOVED IN ITS ENTIRETY; COORD. WITH REVISED PLANS

GENERAL DEMOLITION NOTES: (APPLY TO THIS SHEET ONLY)

1. ALL ITEMS INDICATED TO BE REMOVED SHALL BE DONE IN THEIR ENTIRETY. (INCLUDING ANY ACCESSORIES, RELATED ACCESSORIES, OR PARTS) UNLESS OTHERWISE NOTED. ALL RELATED ITEMS SHALL BE REMOVED TO ACCOMMODATE INSTALLATION OF NEW WORK AND ALL DEMOLITION SHALL BE COORDINATED W/ NEW WORK.
2. CAREFULLY REMOVE ANY EXISTING SURFACE MNTD. ITEMS/ ACCESSORIES FROM EXISTING WALLS AS REQ'D. FOR NEW WORK AND REINSTALL WHEN COMPLETED, UNLESS OTHERWISE NOTED. (STORE & PROTECT ITEMS AS REQ'D.)
3. ANY EXIST. TO REMAIN CONSTRUCTION DAMAGED DURING CONSTRUCTION SHALL BE REPAIRED TO MATCH PRIOR AS REQUIRED. IF REPAIR CANNOT BE ACCOMMODATED, NEW SHALL BE PROVIDED AT THE GENERAL CONTRACTORS EXPENSE.
4. CONTRACTOR SHALL BE RESPONSIBLE TO VISIT SITE TO VERIFY ALL EXISTING CONDITIONS PRIOR TO BIDDING.
5. CONTRACTOR SHALL BE RESPONSIBLE FOR ANY EXISTING DEMOLITION WORK REQUIRED FOR INSTALLATION OF ANY NEW PRODUCTS OR CONSTRUCTION WHETHER CALLED OUT ON THESE DRAWINGS OR NOT. CONTRACTOR SHALL ALSO BE RESPONSIBLE FOR PATCHING OF EXISTING CONSTRUCTION WITH NEW CONSTRUCTION MATERIALS TO MATCH IN THEIR ENTIRETY WHETHER CALLED OUT OR NOT. A FINISHED APPEARANCE IS EXPECTED. THIS WORK AS DESCRIBED, SHALL ALL BE DONE AT GENERAL CONTRACTOR'S EXPENSE.
6. ALL DOORS AND FRAMES TO BE DEMOLISHED SHALL INCLUDE ALL HARDWARE AND RELATED ACCESSORIES, U.O.N.
7. PROTECT ALL EXIST. CONSTRUCTION TO REMAIN FROM DAMAGE DURING DEMOLITION. TYP. PROVIDE MEANS OF DUST CONTAINMENT THROUGHOUT DEMOLITION AND CONSTRUCTION PROCESSES.
8. COORDINATE ALL DEMOLITION/REMOVAL WITH ASBESTOS ABATEMENT. ANY FLOORING NOT REMOVED AS PART OF ASBESTOS ABATEMENT SHALL BE REMOVED IN ITS ENTIRETY WITH THE DEMOLITION OF THE EXISTING SLAB.

1 / A100 EXISTING/DEMOLITION LEVEL 1 FLOOR PLAN

SCALE: 1/4" = 1'-0"

PLAN NORTH

0 2 4 8 16

scale in feet

apacedesign
architects
engineers
planners
2112 Fairview
Peoria Heights, 61616
Phone 309.688.8100
Fax 309.688.4784
www.apacedesign.com

Existing/Demolition Level 1 Floor Plan

Peoria PlayHouse Children's Museum
Peoria Park District
Glen Oak Park Pavillion
Peoria, IL 61603

NO.	ISSUE	DATE
1	Bidding Documents	3.19.14

DATE 3.19.14	PROJECT NO. 24905.02
DRAWN BY BLK	SHEET
CHECKED BLK	A100
APPROVED SJM	3 OF 24

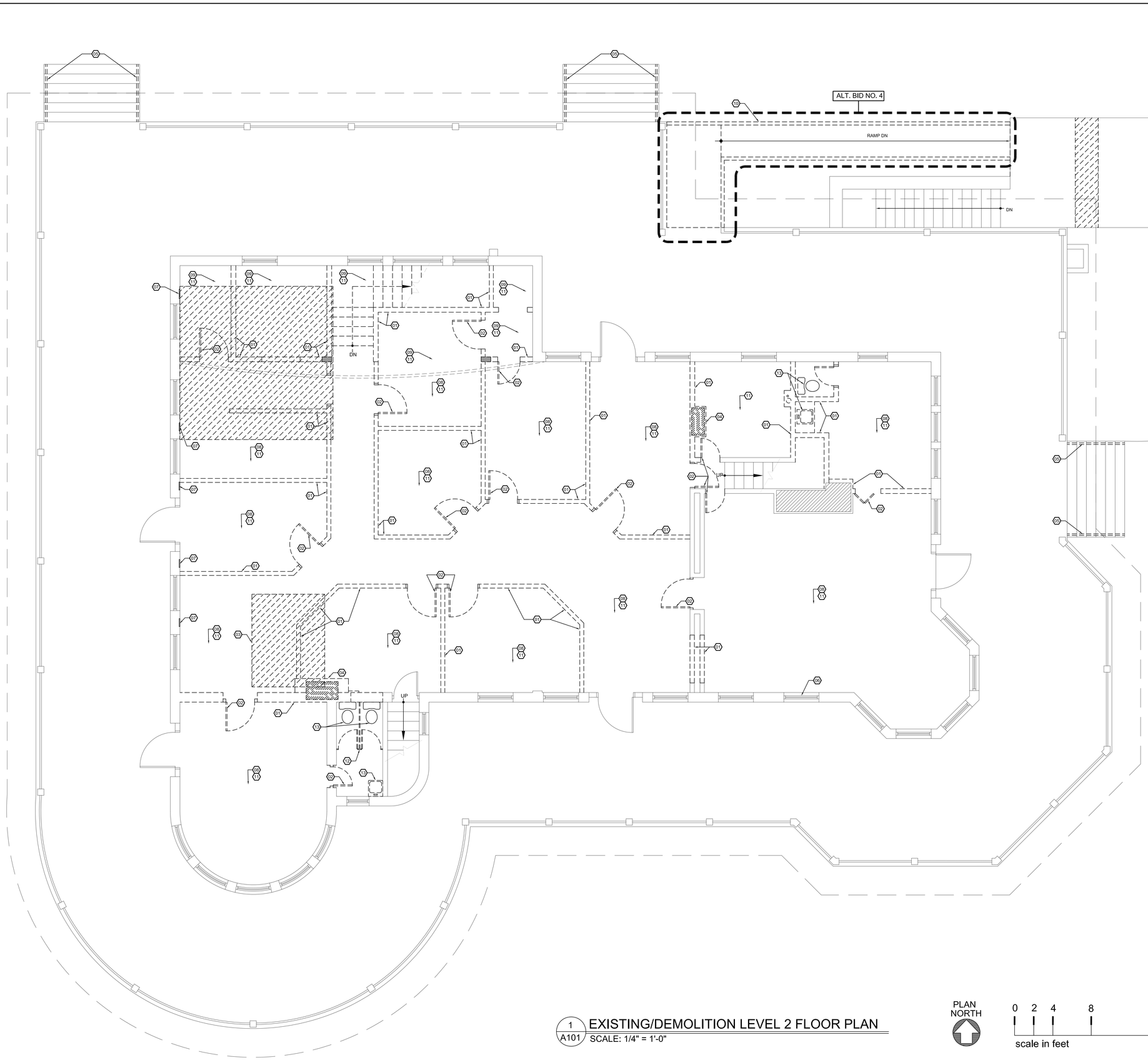

LEGEND: APPLIES TO THIS SHEET ONLY

= EXIST. WALL CONSTRUCTION TO REMAIN

= EXIST. WALL CONSTRUCTION TO BE REMOVED IN THEIR ENTIRETY; COORD. WITH REVISED PLANS

= EXISTING FLOOR CONSTR. OR CONC. SLAB TO BE REMOVED IN ITS ENTIRETY; COORD. WITH REVISED PLANS AND STRUCT.

DEMOLITION KEYED NOTES: (APPLY TO THIS SHEET ONLY)

01 = REMOVE EXIST. WALL CONSTRUCTION TO EXTENTS SHOWN; COORD. WITH REVISED PLANS.

02 = REMOVE EXIST. DOOR AND FRAME IN ITS ENTIRETY.

03 = REMOVE EXIST. FLOOR STRUCTURE TO EXTENTS SHOWN; COORD. WITH STRUCT.

04 = REMOVE EXIST. MASONRY CHIMNEY IN ITS ENTIRETY.

05 = REMOVE EXIST. WD. HANDRAILS IN THEIR ENTIRETY.

06 = REMOVE ANY EXIST. MECH. UNITS, LOUVERS, FANS OR OTHER PENETRATIONS FROM WINDOW UNIT. PROVIDE TEMPORARY WEATHERTIGHT ENCLOSURE. COORD. REMOVAL W/ MECH.

07 = REMOVE EXIST. PLASTER WALL CONSTR. AS NECESSARY TO ACCOMMODATE DUCTWORK. COORD. W/ MECH.

08 = REMOVE EXIST. S.A.T. CEILING IN ITS ENTIRETY.

09 = REMOVE EXIST. PLASTER CEILING IN ITS ENTIRETY.

10 = REMOVE EXIST. WOOD RAMP IN ITS ENTIRETY (ALT. BID NO. 4)

11 = REMOVE EXIST. CARPET IN ITS ENTIRETY.

12 = REMOVE EXIST. TOILET PARTITIONS IN THEIR ENTIRETY.

13 = REMOVE EXIST. PLUMBING FIXTURES. COORD. W/ PLUMB.

GENERAL DEMOLITION NOTES: (APPLY TO THIS SHEET ONLY)

1. ALL ITEMS INDICATED TO BE REMOVED SHALL BE DONE IN THEIR ENTIRETY, (INCLUDING ANY ACCESSORIES, RELATED ACCESSORIES, OR PARTS) UNLESS OTHERWISE NOTED. ALL RELATED ITEMS SHALL BE REMOVED TO ACCOMMODATE INSTALLATION OF NEW WORK AND ALL DEMOLITION SHALL BE COORDINATED W/ NEW WORK.
2. CAREFULLY REMOVE ANY EXISTING SURFACE MNTD. ITEMS/ ACCESSORIES FROM EXISTING WALLS AS REQ'D. FOR NEW WORK AND REINSTALL WHEN COMPLETED. UNLESS OTHERWISE NOTED. (STORE & PROTECT ITEMS AS REQ'D.)
3. ANY EXIST. TO REMAIN CONSTRUCTION DAMAGED DURING CONSTRUCTION SHALL BE REPAIRED TO MATCH PRIOR AS REQUIRED. IF REPAIR CANNOT BE ACCOMMODATED, NEW SHALL BE PROVIDED AT THE GENERAL CONTRACTOR'S EXPENSE.
4. CONTRACTOR SHALL BE RESPONSIBLE TO VISIT SITE TO VERIFY ALL EXISTING CONDITIONS PRIOR TO BIDDING.
5. CONTRACTOR SHALL BE RESPONSIBLE FOR ANY EXISTING DEMOLITION WORK REQUIRED FOR INSTALLATION OF ANY NEW PRODUCTS OR CONSTRUCTION WHETHER CALLED OUT ON THESE DRAWINGS OR NOT. CONTRACTOR SHALL ALSO BE RESPONSIBLE FOR PATCHING OF EXISTING CONSTRUCTION WITH NEW CONSTRUCTION MATERIALS TO MATCH IN THEIR ENTIRETY WHETHER CALLED OUT OR NOT, A FINISHED APPEARANCE IS EXPECTED. THIS WORK AS DESCRIBED, SHALL ALL BE DONE AT GENERAL CONTRACTOR'S EXPENSE.
6. ALL DOORS AND FRAMES TO BE DEMOLISHED SHALL INCLUDE ALL HARDWARE AND RELATED ACCESSORIES, U.O.N.
7. PROTECT ALL EXIST. CONSTRUCTION TO REMAIN FROM DAMAGE DURING DEMOLITION. TYP. PROVIDE MEANS OF DUST CONTAINMENT THROUGHOUT DEMOLITION AND CONSTRUCTION PROCESSES.
8. ALL EXISTING WD. TRIM AND CASING TO BE REMOVED SHALL BE SALVAGED FOR POSSIBLE RE-USE.

1 / A101 EXISTING/DEMOLITION LEVEL 2 FLOOR PLAN
SCALE: 1/4" = 1'-0"

PLAN NORTH

0 2 4 8 16
scale in feet

apacedesign
architects
engineers
planners
PRINCIPALS:
Jerry Apace, Marcella Drew
Phone: 309-676-0755
Fax: 309-676-0754
www.apacedesign.com

Existing/Demolition Level 2 Floor Plan

Peoria PlayHouse Children's Museum
Peoria Park District
Glen Oak Park Pavillion
Peoria, IL 61603

NO.	ISSUE	DATE
1	Bidding Documents	3.19.14

DATE 3.19.14	PROJECT NO. 24905.02
DRAWN BY BLK	SHEET
CHECKED BLK	A101
APPROVED SJM	4 OF 24

CODE

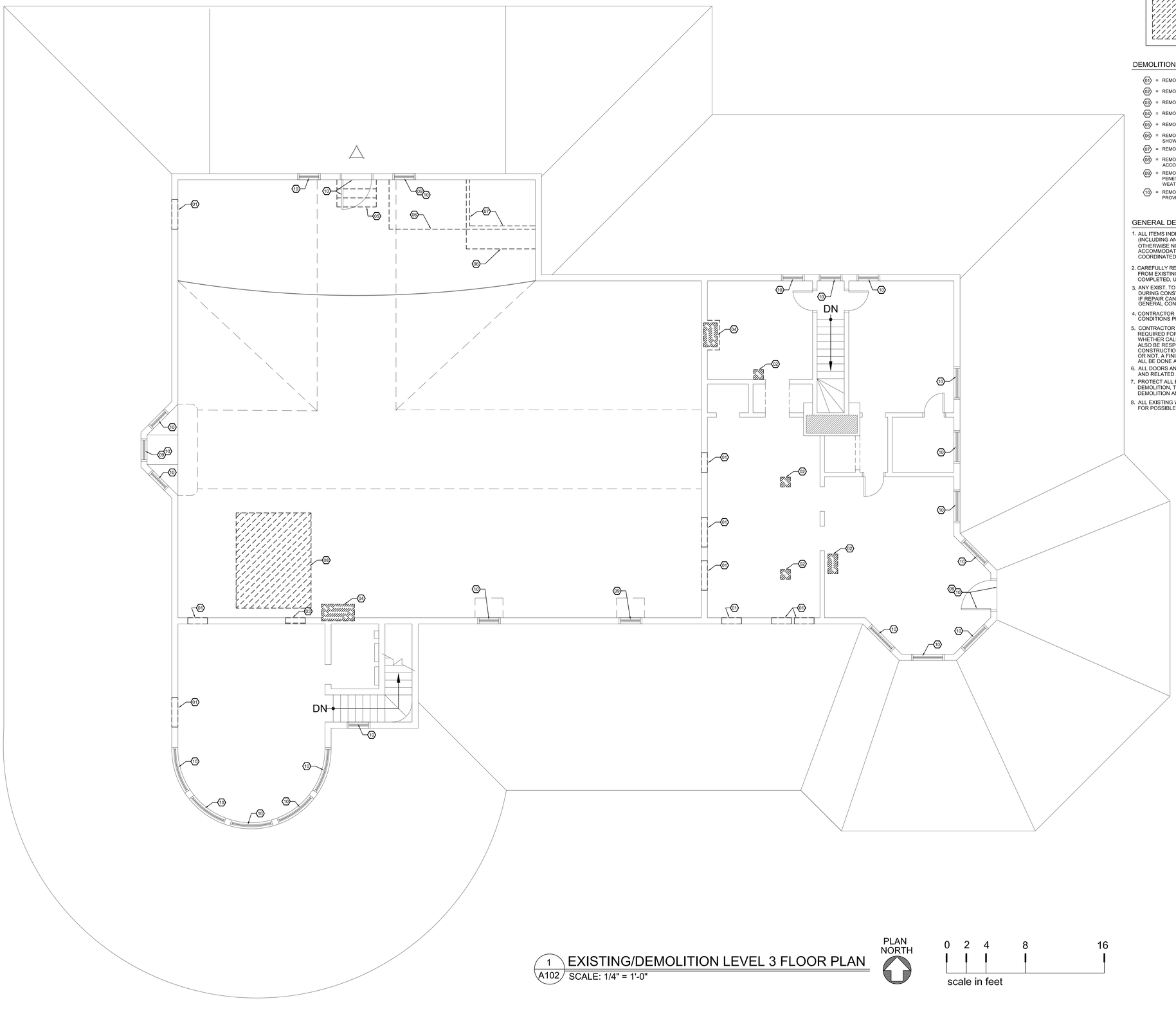

1 A102 EXISTING/DEMOLITION LEVEL 3 FLOOR PLAN
SCALE: 1/4" = 1'-0"

PLAN NORTH

0 2 4 8 16
scale in feet

LEGEND: APPLIES TO THIS SHEET ONLY

= EXIST. WALL CONSTRUCTION TO REMAIN

= EXIST. WALL CONSTRUCTION TO BE REMOVED IN THEIR ENTIRETY; COORD. WITH REVISED PLANS

= EXISTING CEILING CONSTR. TO BE REMOVED IN ITS ENTIRETY; COORD. WITH REVISED PLANS

DEMOLITION KEYED NOTES: (APPLY TO THIS SHEET ONLY)

01 = REMOVE EXIST. WALL CONSTRUCTION; COORD. WITH MECH.

02 = REMOVE EXIST. FLOOR CONSTR.; COORD. WITH MECH.

03 = REMOVE EXIST. ACCESS DOOR.

04 = REMOVE EXIST. MASONRY CHIMNEY IN ITS ENTIRETY.

05 = REMOVE EXIST. STAIRS IN THEIR ENTIRETY.

06 = REMOVE EXIST. MEZZANINE FLOOR STRUCTURE TO EXTENTS SHOWN; COORD. WITH STRUCT.

07 = REMOVE EXIST. RAILING IN ITS ENTIRETY.

08 = REMOVE EXIST. CEILING CONSTR. AS NECESSARY TO ACCOMMODATE THE ELEVATOR SHAFT, COORD. W/ STRUCT.

09 = REMOVE ANY EXIST. MECH. UNITS, LOUVERS, FANS OR OTHER PENETRATIONS FROM WINDOW UNIT, PROVIDE TEMPORARY WEATHERTIGHT ENCLOSURE. COORD. REMOVAL W/ MECH.

10 = REMOVE ANY BOARDING OR RIGID INSUL. FROM WINDOW UNIT, PROVIDE TEMPORARY WEATHERTIGHT ENCLOSURE AS NECESSARY.

GENERAL DEMOLITION NOTES: (APPLY TO THIS SHEET ONLY)

1. ALL ITEMS INDICATED TO BE REMOVED SHALL BE DONE IN THEIR ENTIRETY. (INCLUDING ANY ACCESSORIES, RELATED ACCESSORIES, OR PARTS) UNLESS OTHERWISE NOTED. ALL RELATED ITEMS SHALL BE REMOVED TO ACCOMMODATE INSTALLATION OF NEW WORK AND ALL DEMOLITION SHALL BE COORDINATED W/ NEW WORK.
2. CAREFULLY REMOVE ANY EXISTING SURFACE MNTD. ITEMS/ ACCESSORIES FROM EXISTING WALLS AS REQ'D. FOR NEW WORK AND REINSTALL WHEN COMPLETED, UNLESS OTHERWISE NOTED. (STORE & PROTECT ITEMS AS REQ'D.)
3. ANY EXIST. TO REMAIN CONSTRUCTION DAMAGED DURING CONSTRUCTION SHALL BE REPAIRED TO MATCH PRIOR AS REQUIRED. IF REPAIR CANNOT BE ACCOMMODATED, NEW SHALL BE PROVIDED AT THE GENERAL CONTRACTORS EXPENSE.
4. CONTRACTOR SHALL BE RESPONSIBLE TO VISIT SITE TO VERIFY ALL EXISTING CONDITIONS PRIOR TO BIDDING.
5. CONTRACTOR SHALL BE RESPONSIBLE FOR ANY EXISTING DEMOLITION WORK REQUIRED FOR INSTALLATION OF ANY NEW PRODUCTS OR CONSTRUCTION WHETHER CALLED OUT ON THESE DRAWINGS OR NOT. CONTRACTOR SHALL ALSO BE RESPONSIBLE FOR PATCHING OF EXISTING CONSTRUCTION WITH NEW CONSTRUCTION MATERIALS TO MATCH IN THEIR ENTIRETY WHETHER CALLED OUT OR NOT. A FINISHED APPEARANCE IS EXPECTED. THIS WORK AS DESCRIBED, SHALL ALL BE DONE AT GENERAL CONTRACTOR'S EXPENSE.
6. ALL DOORS AND FRAMES TO BE DEMOLISHED SHALL INCLUDE ALL HARDWARE AND RELATED ACCESSORIES, U.O.N.
7. PROTECT ALL EXIST. CONSTRUCTION TO REMAIN FROM DAMAGE DURING DEMOLITION, TYP. PROVIDE MEANS OF DUST CONTAINMENT THROUGHOUT DEMOLITION AND CONSTRUCTION PROCESSES.
8. ALL EXISTING WD. TRIM AND CASING TO BE REMOVED SHALL BE SALVAGED FOR POSSIBLE RE-USE.

architect
apacedesign
2115 Fremier
2115 E. Fremont Memorial Drive
Peoria, IL 61614
(309) 685-4212 (309) 685-4784
www.apacedesign.com

Existing/Demolition Level 3 Floor Plan

Peoria PlayHouse Children's Museum
Peoria Park District
Glen Oak Park Pavillion
Peoria, IL 61603

NO.	ISSUE	DATE
1	Bidding Documents	3.19.14

DATE 3.19.14	PROJECT NO. 24905.02
DRAWN BY BLK	SHEET
CHECKED BLK	A102
APPROVED SJM	5 OF 24

CODE

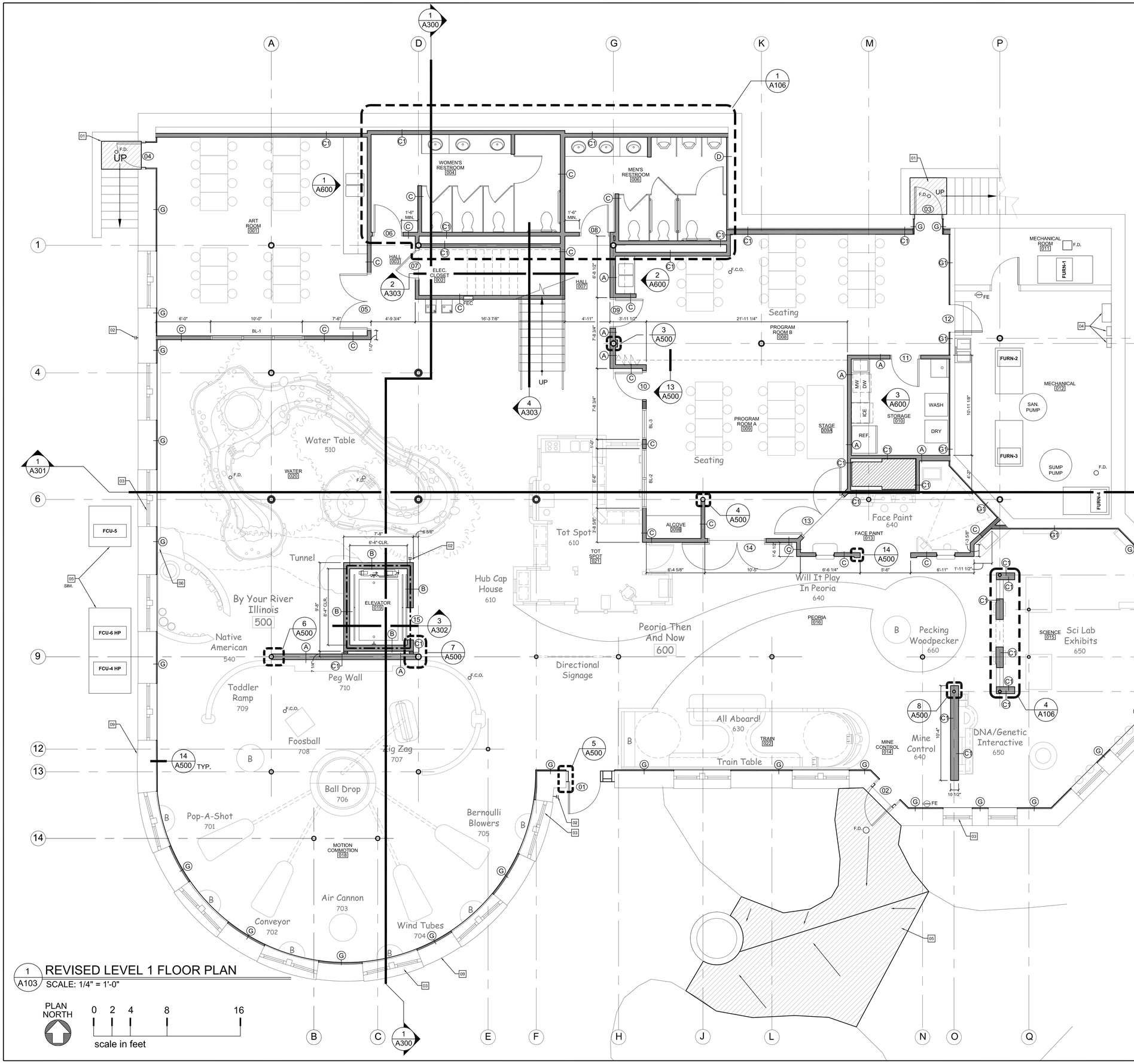

1 A103 REVISED LEVEL 1 FLOOR PLAN
SCALE: 1/4" = 1'-0"

PLAN NORTH

0 2 4 8 16
scale in feet

LEGEND: APPLIES TO THIS SHEET ONLY

- = EXIST. WALL CONSTRUCTION TO REMAIN
- = NEW CONSTRUCTION; SEE WALL TYPES
- = 2-HOUR FIRE-RATED CONSTRUCTION; SEE WALL TYPES
- = CONCRETE REPAIR, SEE KEYED NOTE: COORD. WITH OTHER TRADES
- F.D. = FLOOR DRAIN, COORD. W/ PLUMB.
- F.C.O. = FLOOR CLEAN OUT, COORD. W/ PLUMB.
- F.E. = FIRE EXTINGUISHER AND BRACKET PROVIDED AND INSTALLED BY CONTRACTOR
- F.E.C. = FIRE EXTINGUISHER AND CABINET PROVIDED AND INSTALLED BY CONTRACTOR

REVISED KEYED NOTES: APPLIES TO THIS SHEET ONLY

01 = NEW 4"-THK. CONC. LANDING REINF. WITH 6x6 W1.4xW1.4 W.W.F. AND SET ON MIN. 4" COMPACTED GRANULAR FILL. DOWEL INTO EXISTING CONC. WALLS #4'S @12" C/C. TYP. COORD. DRAIN AND UNDERFLOOR DRAINAGE TILE INSTALLATION WITH PLUMB. CONTRACTOR SHALL PROVIDE WATERSTOPS AT ALL SLAB/WALL TERMINATIONS AT PERIMETER.

02 = WALL HYDRANT, COORD. W/ PLUMB.

03 = REPAIR WINDOW AS NECESSARY TO MATCH EXIST. ADJACENT WINDOWS. THIS WORK SHALL INCLUDE THE REPAIR / REPLACEMENT OF ANY BROKEN / MISSING GLAZING, MUNTINS, SASH OR TRIM PIECES, ETC. TO PROVIDE A WEATHERTIGHT WINDOW ASSEMBLY.

04 = ELEC. PANELS, COORD. W/ ELEC.

05 = NEW 4"-THK. CONC. SIDEWALK REINF. WITH 6x6 W1.4xW1.4 W.W.F. AND SET ON MIN. 4" COMPACTED GRANULAR FILL. DOWEL INTO EXISTING CONC. WALK #4'S @12" C/C. TYP. COORD. DRAIN INSTALLATION WITH PLUMB., SLOPE TO SWALE AS NOTED. VERIFY EXIST. CONDITIONS AND THAT POSITIVE SLOPE AWAY FROM THE BUILDING CAN BE OBTAINED.

06 = CONCEALED PIPE TO BE COVERED BY EXHIBIT, COORD. W/ PLUMB.

07 = LOUVER, COORD. W/ MECH. PATCH/REPAIR CMU AND OPENING AS NECESSARY TO MAKE WATER TIGHT.

08 = CORRUGATED GALV. MET. AREAWAY. EXCAVATE TO 24" BELOW BOTTOM OF LOUVER AND BACKFILL WITH GEOTEXTILE FABRIC AND 3/4" WHITE ROCK TO 6" BELOW SILL. USE BITUMINOUS DAMPROOFING ON FOUNDATION WALL AS NECESSARY TO MAKE WATERTIGHT. AREAWAY SHALL EXTEND FULL HEIGHT TO 6" ABOVE GRADE. SECURELY FASTEN TO FOUNDATION WALL. PAINT EXPOSED PORTION BLACK.

09 = DRAIN LINES FROM MECH. UNITS, COORD. THRU WALL PENETRATION WITH MECH.

REVISED GENERAL NOTES: (APPLY TO THIS SHEET ONLY)

1. ALL HOLES, BULGES, AND CRACKS IN EXIST. PLASTER WALLS TO BE PATCHED WITH NEW CONSTR. TO MATCH ADJACENT.
2. ALL EXIST. AND NEW EXPOSED STRUCTURE, DUCTS, PIPING, ETC. SHALL BE PAINTED.
3. ALL NEW ROOF PENETRATIONS THROUGH EXIST. ROOF SHALL BE FLASHED AND REPAIRED PER SMACNA, COORD. W/ MECH. AND PLUMB.
4. PATCH ALL INTERSECTIONS OF PREVIOUSLY REMOVED WALLS W/ CONSTRUCTION TO MATCH EXIST. ADJACENT CONSTRUCTION.
5. GENERAL CONTRACTOR IS RESPONSIBLE FOR COORDINATING ALL CUTTING AND PATCHING W/ OTHER TRADES.
6. ALL EXPOSED GAS PIPING ON EXTERIOR OR INTERIOR TO BE PAINTED.
7. ALL EXPOSED PLUMB. AND MECH. SUPPORTS ON EXTERIOR TO BE PAINTED.
8. CONTRACTOR SHALL PROVIDE LATEXING AS NECESSARY TO ACCOMMODATE NEW FLOOR FINISHES, COORD. W/ SCHED.
9. ENTIRE BASEMENT CONC. SLAB SHALL BE REPLACED U.O.N., SEE STRUCT.
10. PATCH / REPAIR WALL AT LOCATIONS OF ALL EXIST. RECESSED POWER OUTLETS BEING REMOVED. SEE ELEC.

apacedesign
architects
engineers
planners
Contact Person
21112 Fairfax Memorial Drive
Chantilly, VA 20152
Phone 703.450.8100
Fax 703.450.4784
www.apacedesign.com

Revised Level 1 Floor Plan

Peoria PlayHouse Children's Museum
Peoria Park District
Glen Oak Park Pavillion
Peoria, IL 61603

NO.	ISSUE	DATE
1	Bidding Documents	3.19.14

DATE 3.19.14	PROJECT NO. 24905.02
DRAWN BY BLK	SHEET
CHECKED BLK	A103
APPROVED SJM	6 OF 24

CODE

LEGEND: APPLIES TO THIS SHEET ONLY

- = EXIST. WALL CONSTRUCTION TO REMAIN
- = NEW CONSTRUCTION; SEE WALL TYPES
- = 2-HOUR FIRE-RATED CONSTRUCTION; SEE WALL TYPES
- = CONCRETE REPAIR, SEE KEYED NOTE: COORD. WITH OTHER TRADES
- F.E. = FIRE EXTINGUISHER AND BRACKET PROVIDED AND INSTALLED BY CONTRACTOR
- F.E.C. = FIRE EXTINGUISHER AND CABINET PROVIDED AND INSTALLED BY CONTRACTOR

REVISED KEYED NOTES: (APPLY TO THIS SHEET ONLY)

01 = NEW 4"-THK. CONC. SLAB FOR MECH. UNITS. REINF. WITH 6x6 W1.4xW1.4 W.W.F. AND SET ON MIN. 4" COMPACTED GRANULAR FILL. DOWEL INTO EXISTING CONC. SLAB WITH #4'S @12" C/C, TYP.

02 = CONTRACTOR TO VERIFY ELEVATOR SHAFT ALIGNMENT BETWEEN FLOORS BEFORE REMOVING FLOOR/CEILING STRUCTURE. FIELD VERIFY ALL DIMENSIONS.

03 = CHASE FOR PLUMB. VENT. COORD. W/ PLUMB.

04 = SINK. COORD. W/ PLUMB.

05 = CLEAR ANODIZED ALUMINUM RAMP AND LANDINGS W/ NON-SLIP SURFACE. SECURELY FASTEN TO EXIST. PORCH FLOOR. BUT SHALL BE REMOVABLE IF NECESSARY. VERIFY HEIGHT FOR RISE AND RUN AT EACH LOCATION.

06 = GALV. STL. PIPE HANDRAIL/GUARDRAIL. PNT., SEE DET. 2/A304. PROVIDE BRACKETS FOR SECURING TO WD. STAIRS.

07 = REPAIR WINDOW AS NECESSARY TO MATCH EXIST. ADJACENT WINDOWS. THIS WORK SHALL INCLUDE THE REPAIR / REPLACEMENT OF ANY BROKEN / MISSING GLAZING, MUNTINS, SASH OR TRIM PIECES, ETC. TO PROVIDE A WEATHERTIGHT WINDOW ASSEMBLY.

08 = 4x4 STL. TUBE POST AND CAP W/ BASE PLATE SECURELY ANCHORED TO FLOOR STRUCTURE FOR ATTACHMENT OF FIRE ALARM PULL STATION. COORD. W/ ELEC., PNT.

09 = A.D.A. PUSH BUTTON DOOR OPERATOR. COORD. W/ DOOR HARDWARE AND ELEC. PNT. EXPOSED CONDUIT.

10 = WALL HYDRANT. COORD. W/ PLUMB.

11 = PATCH EXIST. PLASTER WALL AS NECESSARY. COORD. W/ MECH.

REVISED GENERAL NOTES: (APPLY TO THIS SHEET ONLY)

1. ALL HOLES, BULGES, AND CRACKS IN EXIST. PLASTER WALLS TO BE PATCHED WITH NEW CONSTR. TO MATCH ADJACENT.
2. ALL EXIST. AND NEW EXPOSED STRUCTURE, DUCTS, PIPING, ETC. SHALL BE PAINTED.
3. ALL NEW ROOF PENETRATIONS THROUGH EXIST. ROOF SHALL BE FLASHED AND REPAIRED PER SMACNA. COORD. W/ MECH. AND PLUMB.
4. PATCH ALL INTERSECTIONS OF PREVIOUSLY REMOVED WALLS W/ CONSTRUCTION TO MATCH EXIST. ADJACENT CONSTRUCTION.
5. GENERAL CONTRACTOR IS RESPONSIBLE FOR COORDINATING ALL CUTTING AND PATCHING W/ OTHER TRADES.
6. ALL EXPOSED GAS PIPING ON EXTERIOR OR INTERIOR TO BE PAINTED.
7. ALL EXPOSED PLUMB. AND MECH. SUPPORTS ON EXTERIOR TO BE PAINTED.
8. 1/4" PLYWOOD UNDERLAYMENT SHALL BE PROVIDED AND INSTALLED AT ALL EXIST. WD. SUBFLOORS TO PROVIDE A SMOOTH SUBSTRATE FOR FIN. FLRNG., COORD. W/ SCHED.
9. PATCH / REPAIR WALL AT LOCATIONS OF ALL EXIST. RECESSED POWER OUTLETS BEING REMOVED. SEE ELEC.

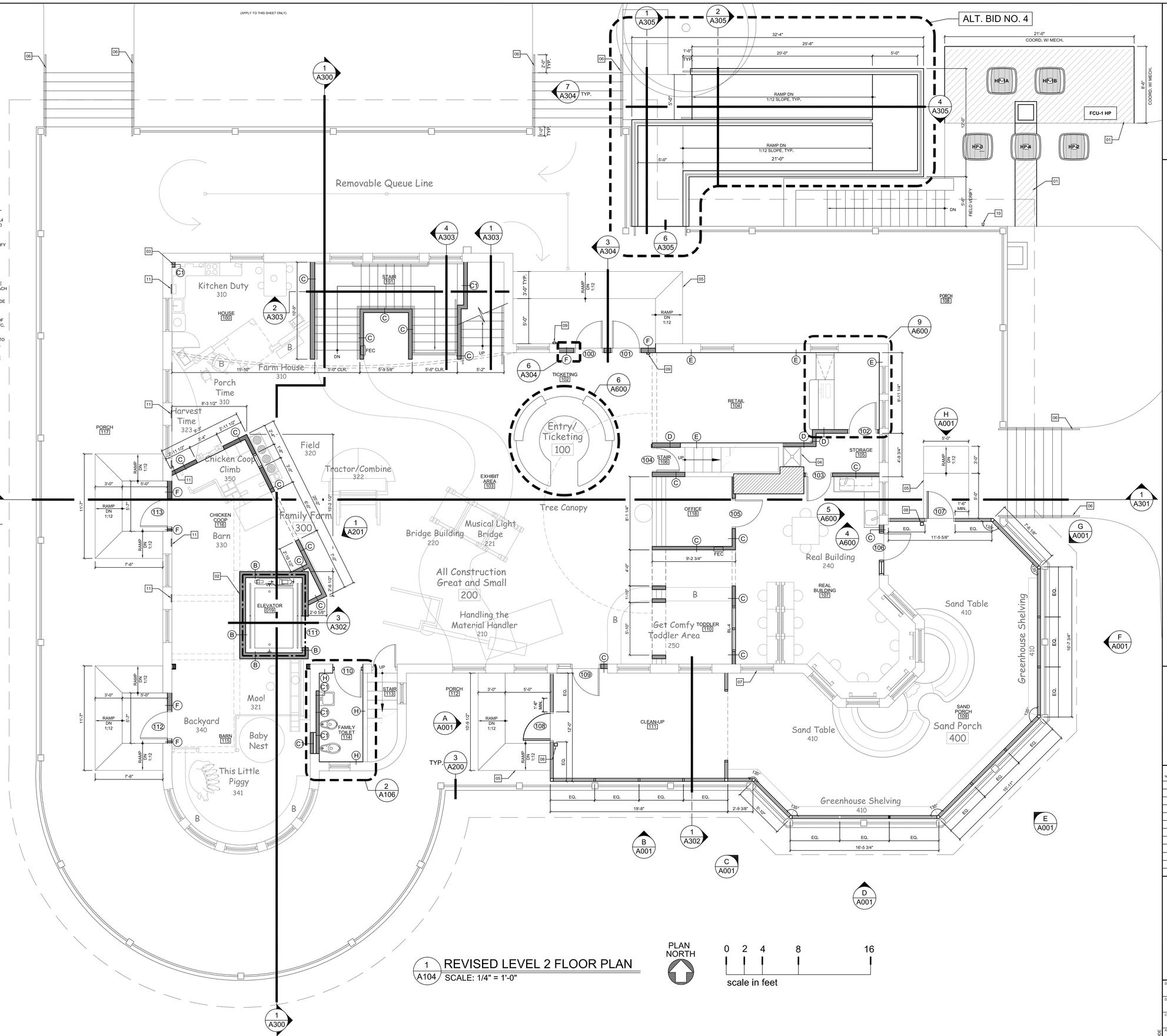

1 / A104 REVISED LEVEL 2 FLOOR PLAN
SCALE: 1/4" = 1'-0"

PLAN NORTH

0 2 4 8 16
scale in feet

apacedesign
2102 Fairlay
Suite 1 Mercantile Drive
Peoria, Illinois 61614
(309) 686-9100 fax 686-9104
www.apacedesign.com
architects
engineers
planners

Revised Level 2 Floor Plan

Peoria PlayHouse Children's Museum
Peoria Park District
Glen Oak Park Pavillion
Peoria, IL 61603

NO.	ISSUE	DATE
1	Bidding Documents	3.19.14

DATE 3.19.14	PROJECT NO. 24905.02
DRAWN BY BLK	SHEET
CHECKED BLK	A104
APPROVED SJM	7 OF 24

CODE

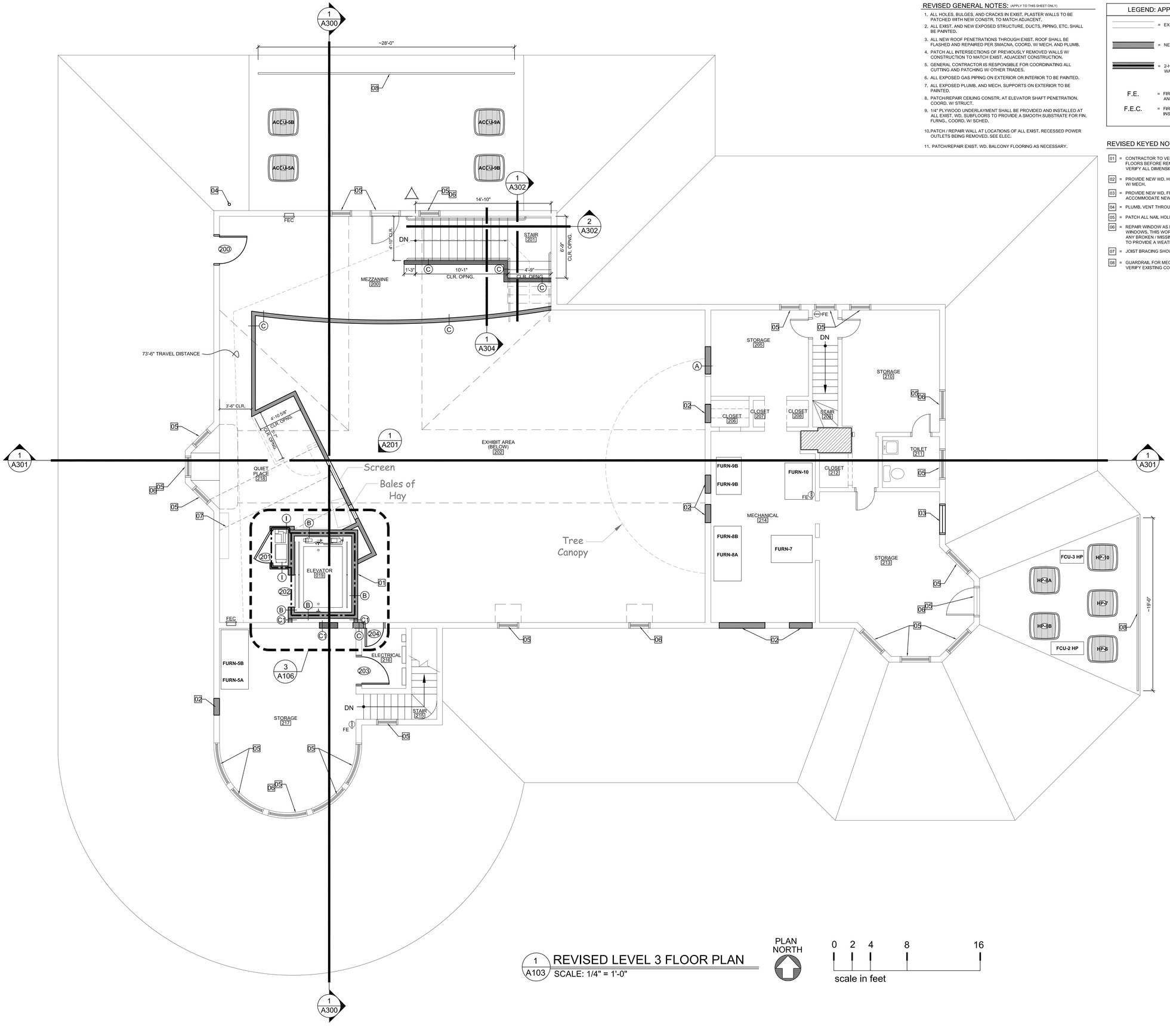

1 A103 REVISED LEVEL 3 FLOOR PLAN
SCALE: 1/4" = 1'-0"

PLAN NORTH

0 2 4 8 16
scale in feet

REVISED GENERAL NOTES: (APPLY TO THIS SHEET ONLY)

1. ALL HOLES, BULGES, AND CRACKS IN EXIST. PLASTER WALLS TO BE PATCHED WITH NEW CONSTR. TO MATCH ADJACENT.
2. ALL EXIST. AND NEW EXPOSED STRUCTURE, DUCTS, PIPING, ETC. SHALL BE PAINTED.
3. ALL NEW ROOF PENETRATIONS THROUGH EXIST. ROOF SHALL BE FLASHED AND REPAIRED PER SMACNA. COORD. W/ MECH. AND PLUMB.
4. PATCH ALL INTERSECTIONS OF PREVIOUSLY REMOVED WALLS W/ CONSTRUCTION TO MATCH EXIST. ADJACENT CONSTRUCTION.
5. GENERAL CONTRACTOR IS RESPONSIBLE FOR COORDINATING ALL CUTTING AND PATCHING W/ OTHER TRADES.
6. ALL EXPOSED GAS PIPING ON EXTERIOR OR INTERIOR TO BE PAINTED.
7. ALL EXPOSED PLUMB. AND MECH. SUPPORTS ON EXTERIOR TO BE PAINTED.
8. PATCH/REPAIR CEILING CONSTR. AT ELEVATOR SHAFT PENETRATION. COORD. W/ STRUCT.
9. 1/4" PLYWOOD UNDERLAYMENT SHALL BE PROVIDED AND INSTALLED AT ALL EXIST. WD. SUBFLOORS TO PROVIDE A SMOOTH SUBSTRATE FOR FIN. FLRNG., COORD. W/ SCHED.
10. PATCH / REPAIR WALL AT LOCATIONS OF ALL EXIST. RECESSED POWER OUTLETS BEING REMOVED. SEE ELEC.
11. PATCH/REPAIR EXIST. WD. BALCONY FLOORING AS NECESSARY.

LEGEND: APPLIES TO THIS SHEET ONLY

	= EXIST. WALL CONSTRUCTION TO REMAIN
	= NEW CONSTRUCTION; SEE WALL TYPES
	= 2-HOUR FIRE-RATED CONSTRUCTION; SEE WALL TYPES
F.E.	= FIRE EXTINGUISHER AND BRACKET PROVIDED AND INSTALLED BY CONTRACTOR
F.E.C.	= FIRE EXTINGUISHER AND CABINET PROVIDED AND INSTALLED BY CONTRACTOR

REVISED KEYED NOTES: (APPLY TO THIS SHEET ONLY)

01 = CONTRACTOR TO VERIFY ELEVATOR SHAFT ALIGNMENT BETWEEN FLOORS BEFORE REMOVING FLOOR/CEILING STRUCTURE. FIELD VERIFY ALL DIMENSIONS.

02 = PROVIDE NEW WD. HEADER AND FRAMING AT DUCT OPENING. COORD. W/ MECH.

03 = PROVIDE NEW WD. FRAMING, BLKNG. AND FLASHING AS NECESSARY TO ACCOMMODATE NEW LOUVER. COORD. W/ MECH..

04 = PLUMB. VENT THROUGH ROOF. COORD. W/ PLUMB.

05 = PATCH ALL NAIL HOLES IN WINDOW FRAME, SASH, MUNTINS, ETC.

06 = REPAIR WINDOW AS NECESSARY TO MATCH EXIST. ADJACENT WINDOWS. THIS WORK SHALL INCLUDE THE REPAIR / REPLACEMENT OF ANY BROKEN / MISSING GLAZING, MUNTINS, SASH OR TRIM PIECES, ETC. TO PROVIDE A WEATHERTIGHT WINDOW ASSEMBLY.

07 = JOIST BRACING SHOWN DASHED ABOVE, SEE STRUCT., PNT., TYP.

08 = GUARDRAIL FOR MECHANICAL UNITS, SEE DET. 4/A200, PNT., TYP. FIELD VERIFY EXISTING CONDITIONS/DIMENSIONS.

apacedesign
architects
planners
designers
2115 Fairlar
Peoria, Arizona 85382
(309) 685-4272 (309) 685-4784
info@apacedesign.com
www.apacedesign.com

Revised Level 3 Floor Plan

Peoria PlayHouse Children's Museum
Peoria Park District
Glen Oak Park Pavillion
Peoria, IL 61603

NO.	ISSUE	DATE
1	Bidding Documents	3.19.14

DATE 3.19.14	PROJECT NO. 24905.02
DRAWN BY BLK	SHEET
CHECKED BLK	A105
APPROVED SJM	8 OF 24

CODE

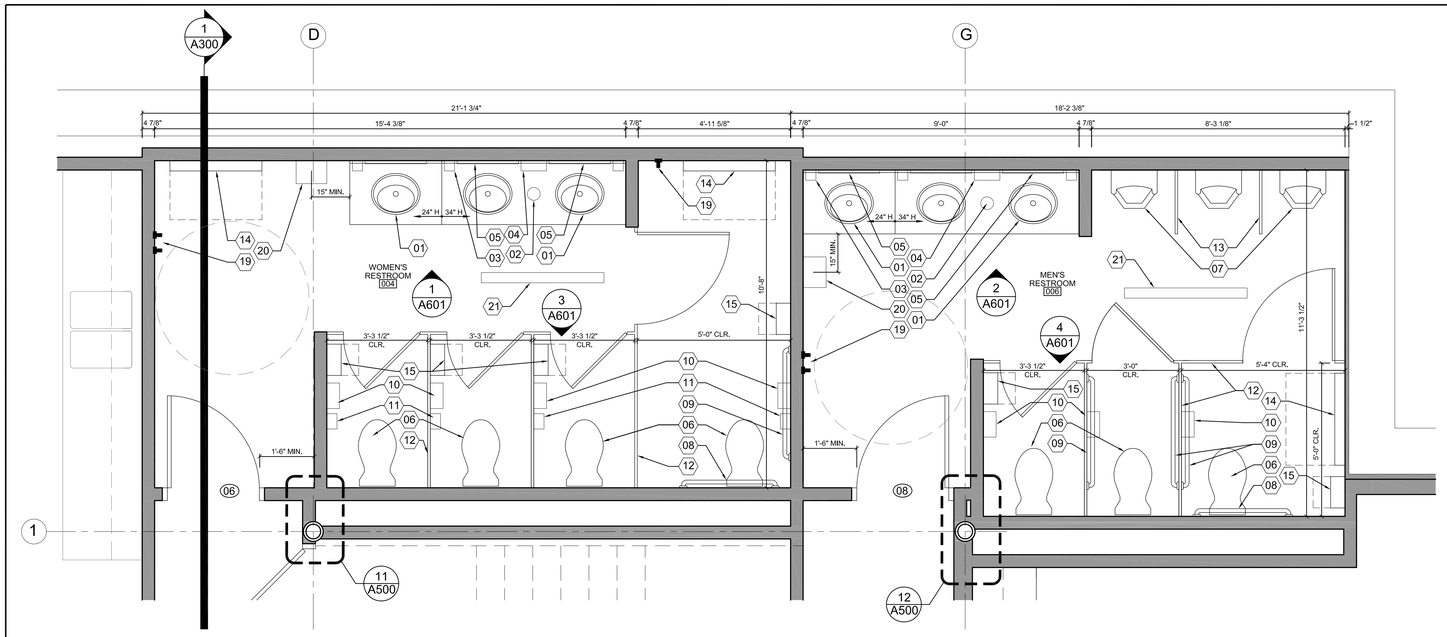

1 / A106 WOMEN'S 004 & MEN'S 006 PARTIAL PLAN

SCALE: 1/2" = 1'-0"

PLAN NORTH

0 1 2 4
scale in feet

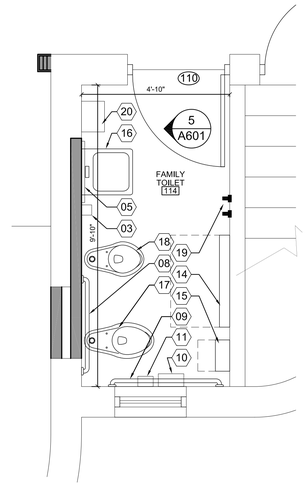

2 / A106 FAMILY TOILET 114 PARTIAL PLAN

SCALE: 1/2" = 1'-0"

PLAN NORTH

0 1 2 4
scale in feet

LEGEND: APPLIES TO THIS SHEET ONLY

- = EXIST. WALL CONSTRUCTION TO REMAIN
- = NEW CONSTRUCTION; SEE WALL TYPES
- = 2-HOUR FIRE-RATED CONSTRUCTION; SEE WALL TYPES
- (#) = DOOR NUMBER; SEE SHEET A001

KEYED NOTES:

01. SOLID SURFACE COUNTERTOP W/ INTREGAL SOLID SURFACE LAVATORY BOWLS; COORD. W/ PLUMBING. SEE DETAIL 6/A601.
02. 5" DIA. TRASH HOLE IN COUNTER, CENTERED BETWEEN LAVS. MOVABLE WASTE CAN UNDER COUNTER, BY OWNER.
03. SURFACE-MOUNTED SOAP DISPENSER, OWNER PROVIDED / CONTRACTOR INSTALLED, TYP.
04. SURFACE-MOUNTED PAPER TOWEL DISPENSER, OWNER PROVIDED / CONTRACTOR INSTALLED, TYP.
05. 18"x36" WALL-HUNG MIRROR. CONTRACTOR PROVIDED / CONTRACTOR INSTALLED, TYP. PROVIDE FIN. BLOCKING BEHIND MIRROR ABOVE TILE WAINSCOT.
06. WALL-MOUNTED WATER CLOSET, SEE PLUMB.
07. WALL-MOUNTED URINAL, SEE PLUMB.
08. 36" GRAB BAR. CONTRACTOR PROVIDED / CONTRACTOR INSTALLED.
09. 42" GRAB BAR, CONTRACTOR PROVIDED / CONTRACTOR INSTALLED.
10. TOILET PAPER DISPENSER (ONE PER TOILET), OWNER PROVIDED / CONTRACTOR INSTALLED.
11. FEMININE PRODUCT DISPOSAL (ONE PER FEMALE TOILET STALL AND FAMILY RESTROOM), CONTRACTOR PROVIDED / CONTRACTOR INSTALLED.
12. TOILET PARTITION, SOLID POLYMER. EACH STALL DOOR SHALL HAVE 2 HOOKS. PROVIDE FIN. BLOCKING BEHIND WALL BRACKETS ABOVE TILE WAINSCOT, CONT., TYP..
13. WALL-MOUNTED URINAL SCREEN, TYP.
14. FOLD-DOWN DIAPER CHANGING STATION. CONTRACTOR PROVIDED / CONTRACTOR INSTALLED. PROVIDE ALL IN-WALL BLOCKING NEEDED. INSTALL 28" A.F.F.
15. CHILD PROTECTION SEAT. CONTRACTOR PROVIDED / CONTRACTOR INSTALLED. INSTALL 15" A.F.F.
16. WALL-MOUNTED LAVATORY, SEE PLUMB.
17. FLR-MOUNTED WATER CLOSET, SEE PLUMB.
18. FLR-MOUNTED CHILD-SIZED WATER CLOSET, SEE PLUMB.
19. COAT HOOKS, CONTRACTOR PROVIDED / CONTRACTOR INSTALLED, INSTALL 44" A.F.F.
20. ELECTRIC HAND DRYER, CONTRACTOR PROVIDED / CONTRACTOR INSTALLED, TYP.
21. LINEAR FLOOR DRAIN. COORD. W/ TILE JOINTS AND PLUMB.

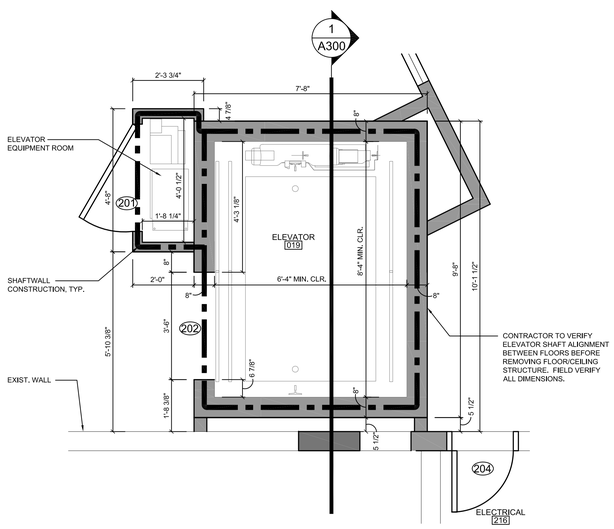

3 / A106 ELEVATOR 019 (LEVEL 3) PARTIAL PLAN

SCALE: 1/2" = 1'-0"

PLAN NORTH

0 1 2 4
scale in feet

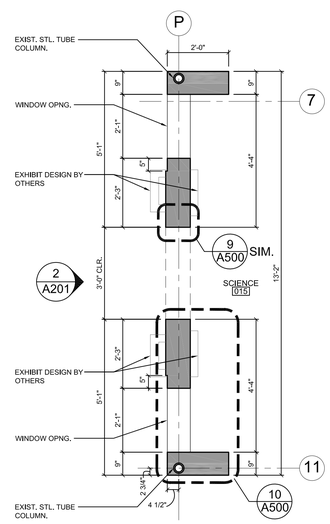

4 / A106 SCIENCE 015 PARTIAL PLAN

SCALE: 1/2" = 1'-0"

PLAN NORTH

0 1 2 4
scale in feet

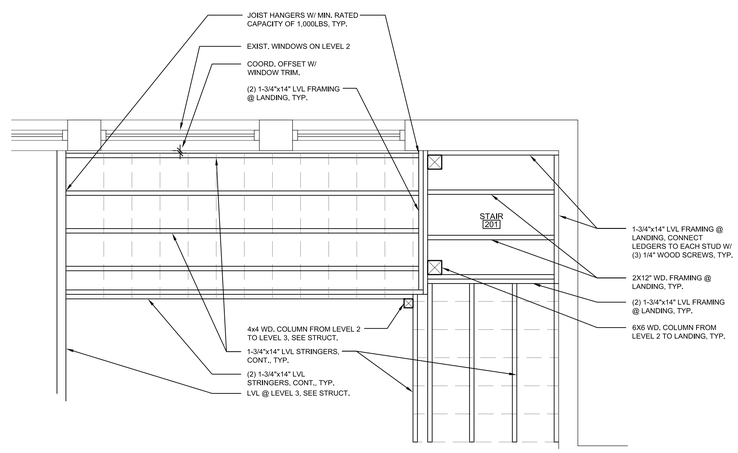

5 / A106 STAIR 201 FRAMING PLAN

SCALE: 1/2" = 1'-0"

PLAN NORTH

0 1 2 4
scale in feet

apacedesign
architects
engineers
planners
2112 Fisher
Peoria, Illinois 61604
Phone 309.676.8100
Fax 309.676.4784
www.apacedesign.com

Partial Plans

Peoria PlayHouse Children's Museum
Peoria Park District
Glen Oak Park Pavillion
Peoria, IL 61603

NO.	ISSUE	DATE
1	Bidding Documents	3.19.14

DATE 3.19.14	PROJECT NO. 24905.02
DRAWN BY BLK / KRM	SHEET A106
CHECKED BLK	
APPROVED SJM	9 OF 24

CODE

LEGEND: APPLIES TO THIS SHEET ONLY

= BASE BID SPRAY FOAM INSULATION, SEE KEYED NOTES.

= ALTERNATE BID NO. 2 SPRAY FOAM INSULATION, SEE KEYED NOTES.

= FILL EXIST. 2x6 STUD EXTERIOR WALLS WITH FOAM INSUL., CONT. FULL HEIGHT TO ATTIC CEILING, TYP. ALTERNATE BID NO. 2

KEYED NOTES:

01. 6" THK. SPRAY FOAM INSUL. AT LEVEL 1 CEILING JOISTS/LEVEL 2 PORCH FLOOR JOISTS, COATED WITH THERMALIGNITION BARRIER, CONT., TYP. TOTAL SYSTEM INSUL. VALUE SHALL BE MIN. R-38.

02. 6" SPRAY FOAM INSUL. (MIN. R-38 TOTAL) AT LEVEL 2 PORCH CEILING JOISTS, COATED WITH THERMALIGNITION BARRIER, CONT., TYP.

03. NEW FLOOR FRAMING OF SAND PORCH SHALL BE FILLED WITH SPRAY FOAM INSULATION AS PART OF BASE BID.

GENERAL NOTES: APPLIES TO THIS SHEET ONLY.

1. ALL HOLES DRILLED INTO EXIST. PLASTER, DRYWALL, ETC. TO FACILITATE INSTALLATION OF INSULATION SHALL BE PATCHED TO MATCH EXIST. ADJACENT SUBSTRATE, TYP.
2. COORDINATE INSTALLATION OF ALL MECH., PLUMB, ELEC., ETC. WITH SEQUENCING OF INSULATION.
3. CONTRACTOR RESPONSIBLE FOR ALL DAMAGE TO EXIST. CONSTR. DUE TO EXPANSION OF FOAM INSUL., AND SHALL MAKE ANY REPAIRS NECESSARY FOR CORRECTIVE WORK.
4. ALL EXPOSED SPRAY FOAM SHALL BE COVERED WITH A THERMALIGNITION BARRIER.

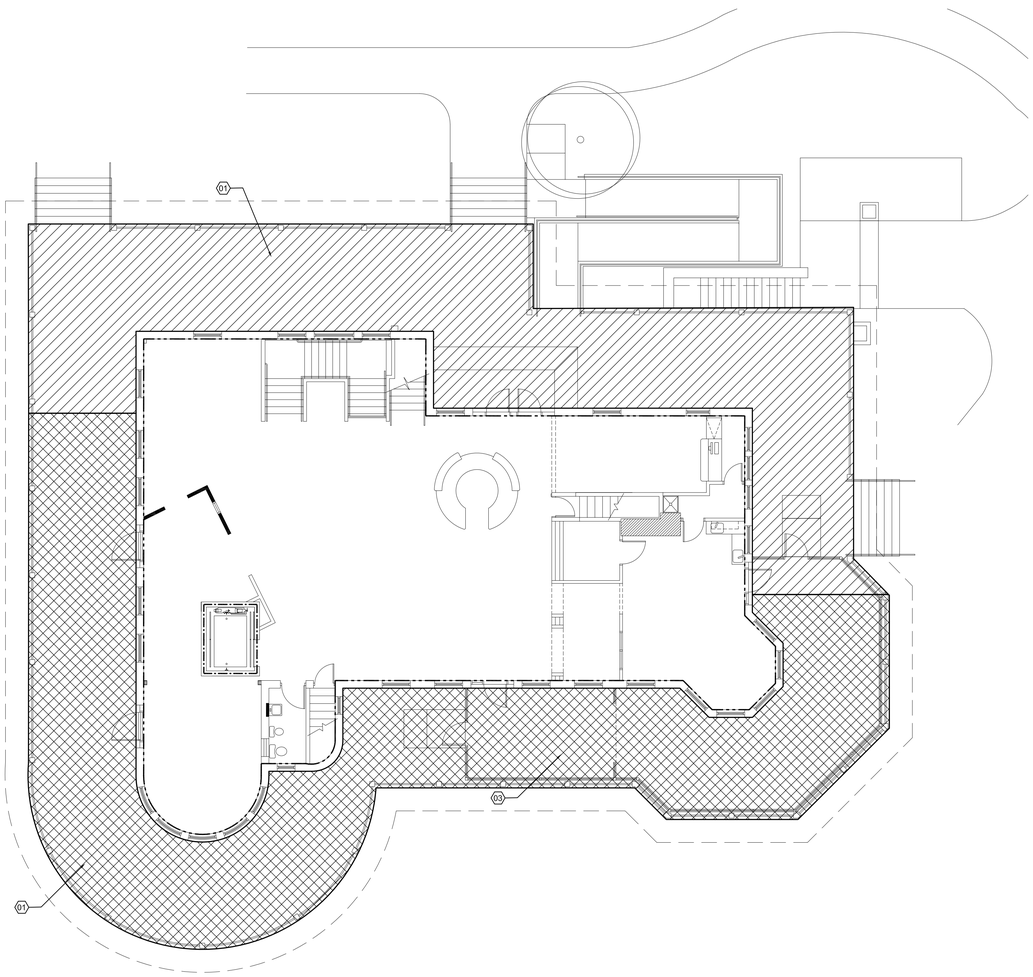

1 / A107 LEVEL 2 - INSULATION PLAN
SCALE: 1/8" = 1'-0"

PLAN NORTH

0 4 8 16
scale in feet

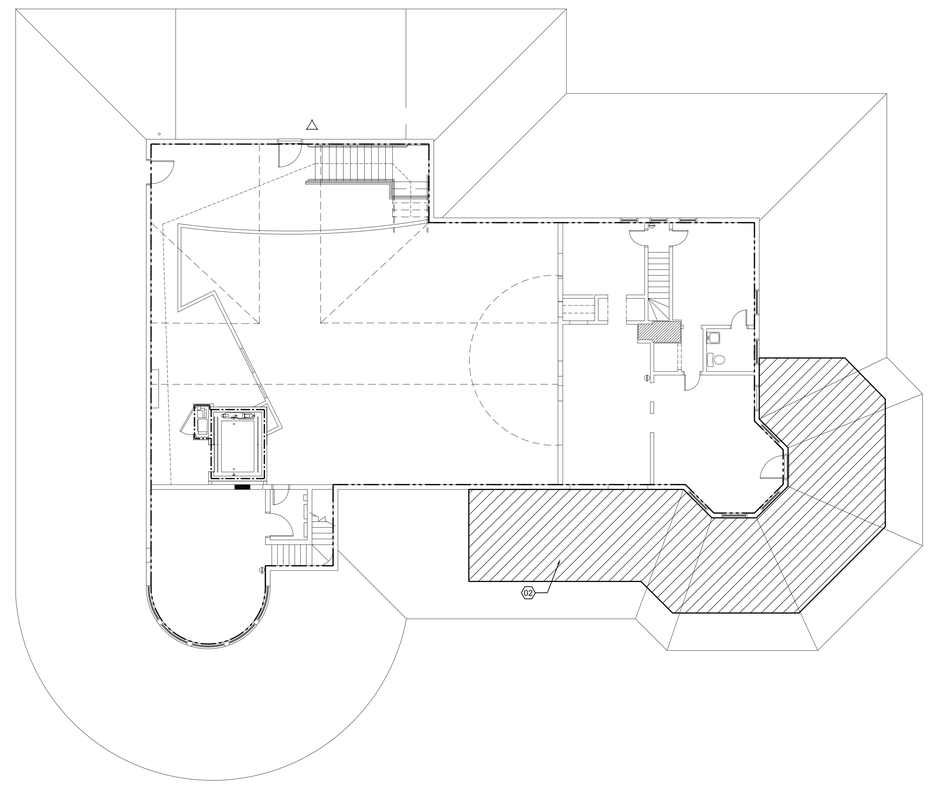

2 / A107 LEVEL 3 - INSULATION PLAN
SCALE: 1/8" = 1'-0"

PLAN NORTH

0 4 8 16
scale in feet

apacedesign
architects
engineers
designers
contact author
21112 Fieldler Memorial Drive
Peoria, AZ 85382
Mobile 480.215.8750
Fax 623.322.9664
www.apacedesign.com

Insulation Location Plans

Peoria PlayHouse Children's Museum
Peoria Park District
Glen Oak Park Pavillion
Peoria, IL 61603

NO.	ISSUE	DATE
1	Bidding Documents	3.19.14

DATE 3.19.14	PROJECT NO. 24905.02
DRAWN BY BLK / KRM	SHEET
CHECKED BLK	A107
APPROVED SJM	10 OF 24

CODE

1 A200 PARTIAL EXTERIOR ELEVATION - SAND PORCH ENCLOSURE
SCALE: 1/4" = 1'-0"

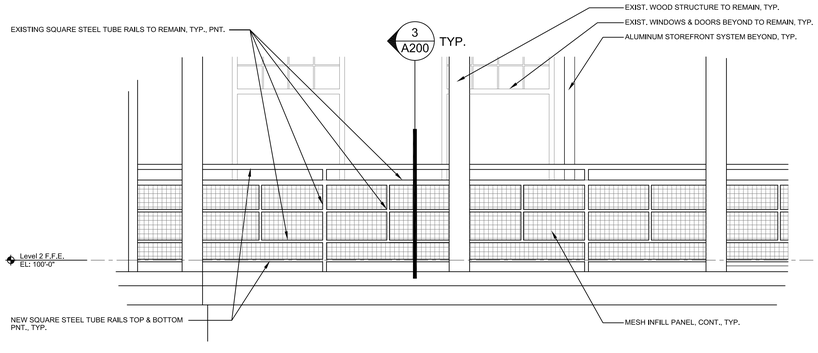

2 A200 SAND PORCH GUARDRAIL DETAIL
SCALE: 1/2" = 1'-0"

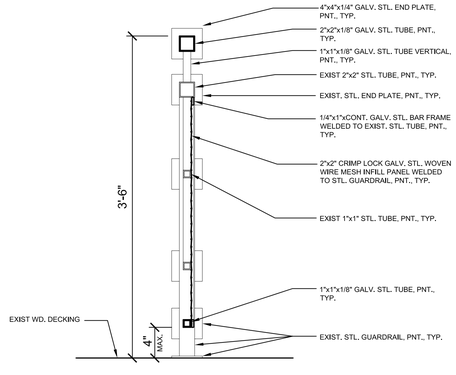

3 A200 TYP. SECTION THRU GUARDRAIL
SCALE: 1-1/2" = 1'-0"

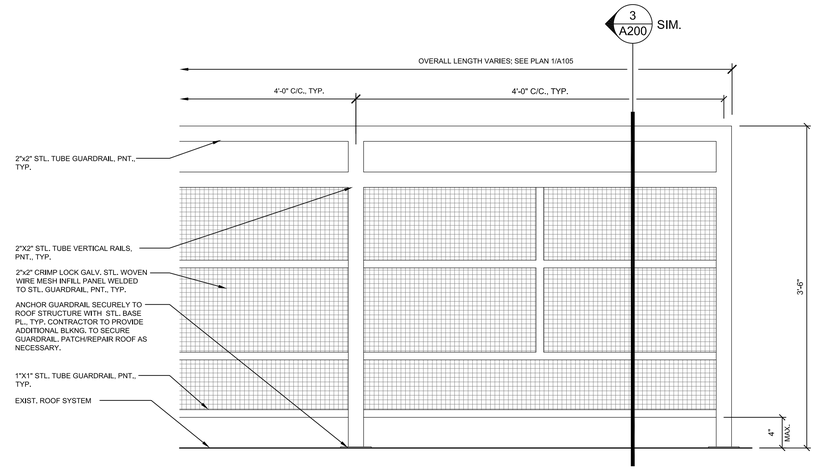

4 A200 TYP. ELEVATION @ MECH. SCREENS
SCALE: 1-1/2" = 1'-0"

apaceDesign
architects
engineers
designers
2112 East War Memorial Drive
Peoria Illinois 61614
t:309.685.4272 f:309.685.4794
www.apaceDesign.com

Existing/Revised Partial Building Elevation and Details

Peoria PlayHouse Children's Museum
Peoria Park District
Glen Oak Park Pavillion
Peoria, Illinois 61603

NO.	ISSUE	DATE
1	Bidding Documents	3.19.14

DATE 3.19.14	PROJECT NO. 24905.02
DRAWN BY BLK / KRM	SHEET A200
CHECKED SJM	
APPROVED SJM	11 OF 24

CODE

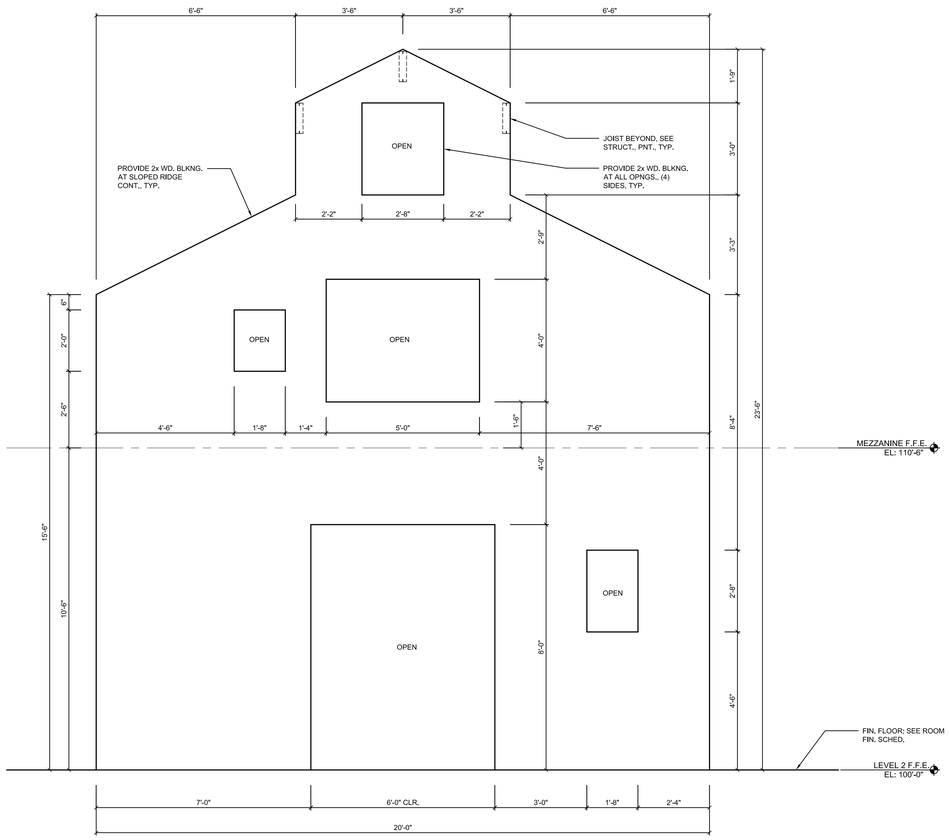

1 A201 BARN ELEVATION @ CHICKEN COOP 116 (LOOKING SOUTHWEST)
SCALE: 1/2" = 1'-0"

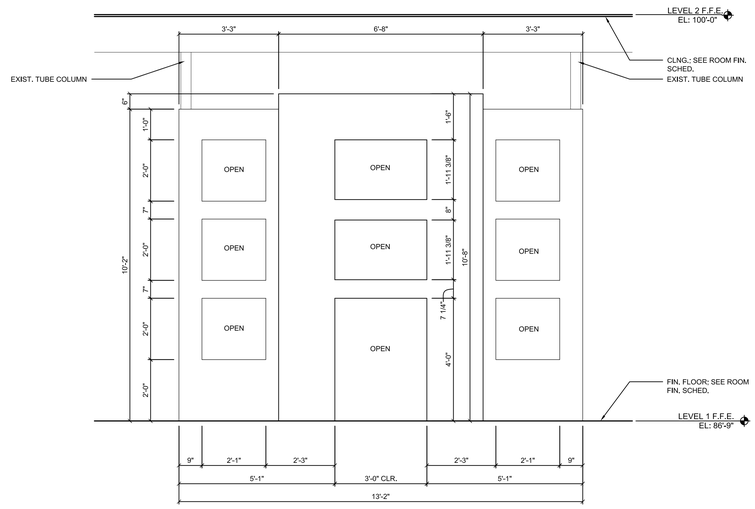

2 A201 SCIENCE 015 INTERIOR ELEVATION (LOOKING EAST)
SCALE: 1/2" = 1'-0"

apaceDesign
architects
engineers
designers

apaceDesign
2112 East War Memorial Drive
Peoria, Illinois 61614
t:309.686.4722 f:309.686.4784
www.apaceDesign.com

Interior Elevations

Peoria PlayHouse Children's Museum
Peoria Park District
Glen Oak Park Pavillion
Peoria, Illinois 61603

NO.	ISSUE	DATE
1	Bidding Documents	3.19.14

DATE 3.19.14	PROJECT NO. 24905.02
DRAWN BY BLK / KRM	SHEET A201
CHECKED SJM	
APPROVED SJM	12 OF 24

CODE

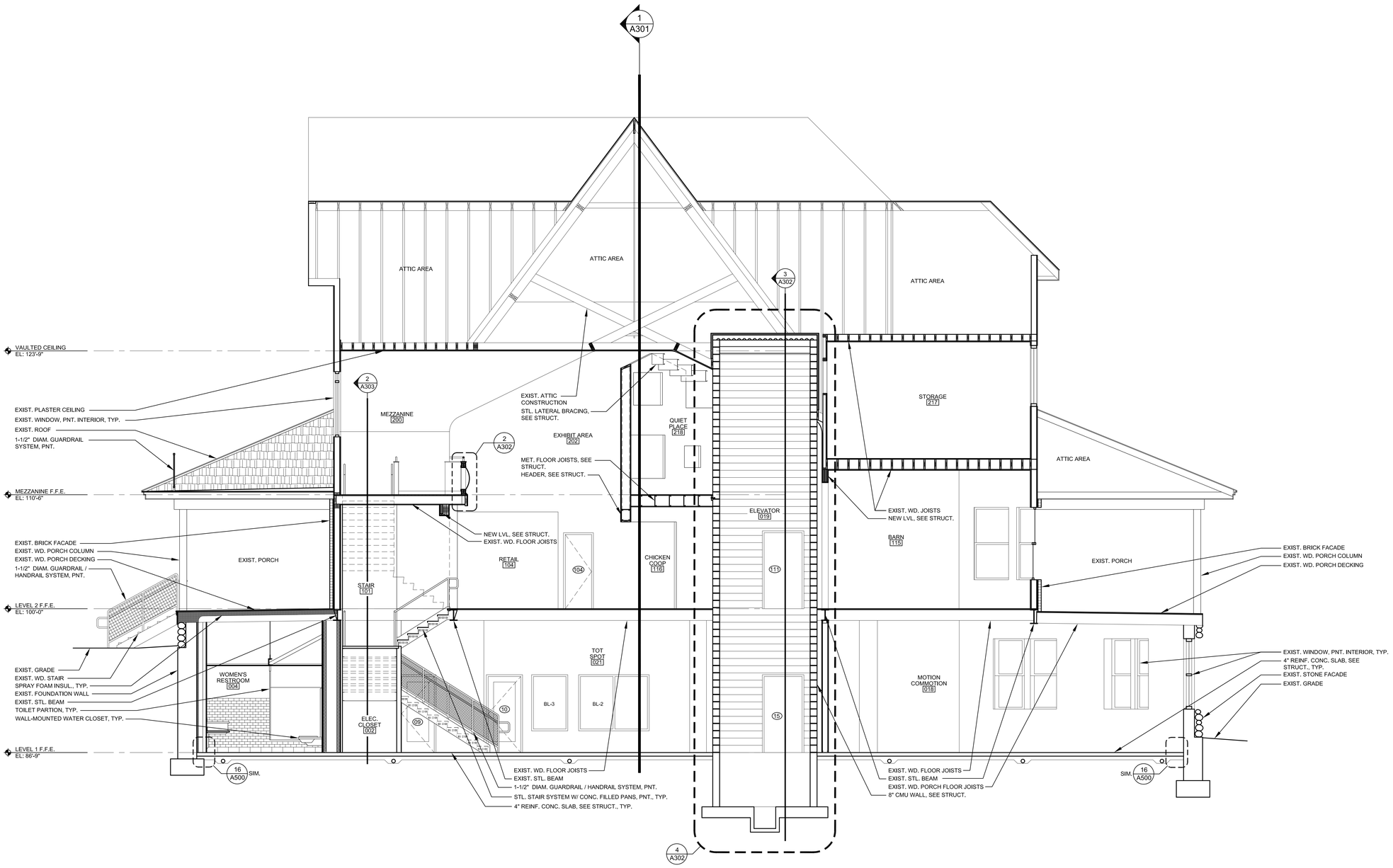

1 A300 EXISTING BUILDING SECTION
SCALE: 1/4" = 1'-0"

0 2 4 8 16
scale in feet

apaceDesign
architects
engineers
designers
2112 East War Memorial Drive
Peoria, Illinois 61614
t:309.685.4722 f:309.685.4784
www.apaceDesign.com

Existing/Revised Building Section

Peoria PlayHouse Children's Museum
Peoria Park District
Glen Oak Park Pavillion
Peoria, Illinois 61603

NO.	ISSUE	DATE
1	Bidding Documents	3.19.14

DATE 3.19.14	PROJECT NO. 24905.02
DRAWN BY BLK	SHEET A300
CHECKED SJM	
APPROVED SJM	13 OF 24

CODE

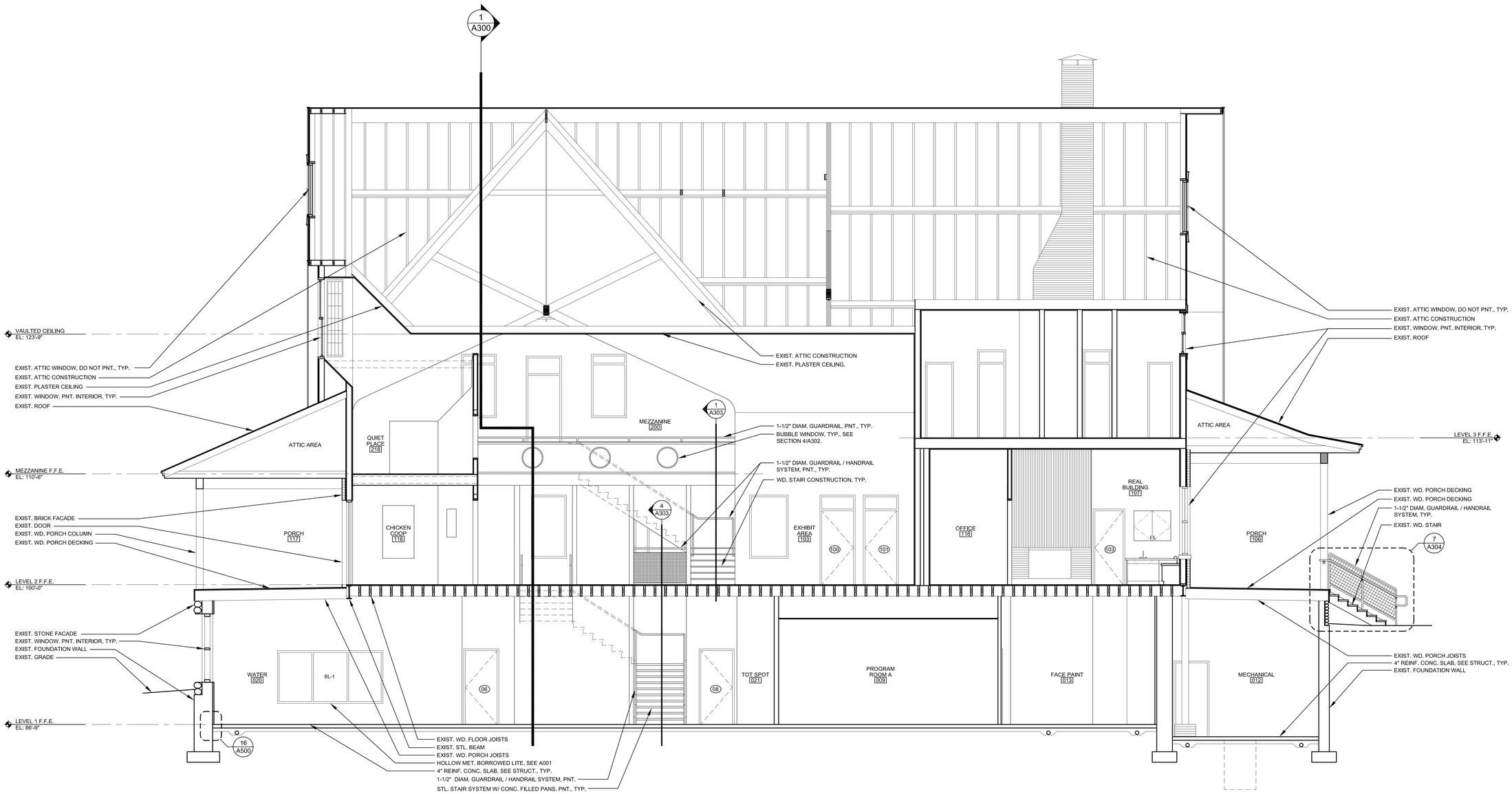

1 A301 EXISTING BUILDING SECTION
SCALE: 1/4" = 1'-0"

0 2 4 8 16
scale in feet

apaceDesign
architects
engineers
designers
2112 East Pine Mansfield Drive
Peoria Illinois 61614
t:309.685.4722 f:309.685.4794
www.apaceDesign.com

Existing/Revised Building Section

Peoria PlayHouse Children's Museum
Peoria Park District
Glen Oak Park Pavillion
Peoria, Illinois 61603

NO.	ISSUE	DATE
1	Bidding Documents	3.19.14

DATE 3.19.14	PROJECT NO. 24905.02
DRAWN BY BLK	SHEET A301
CHECKED SJM	
APPROVED SJM	14 OF 24

CODE

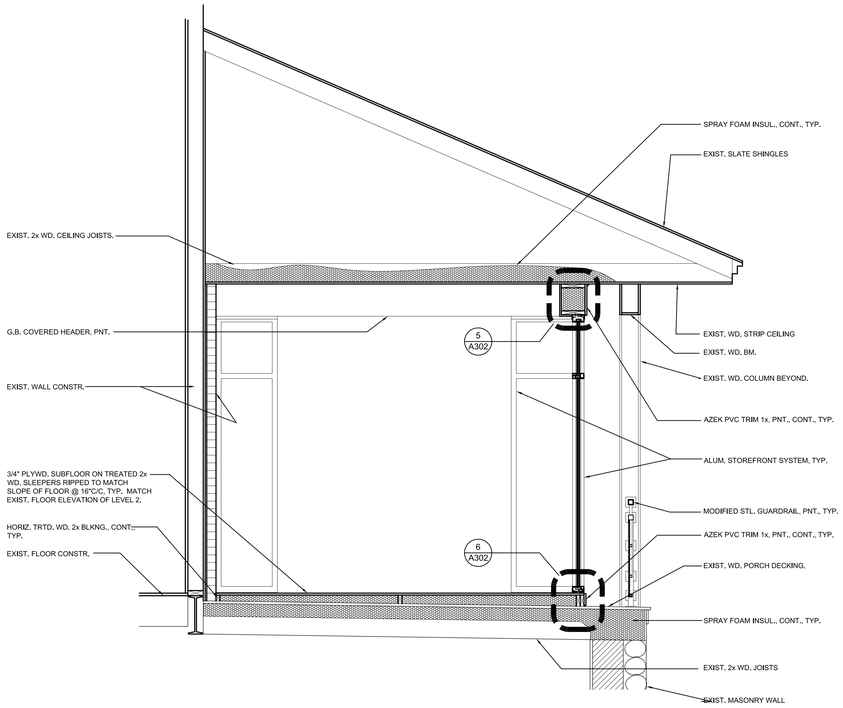

1 A302 SECTION THRU SAND PORCH
SCALE: 1/2" = 1'-0"

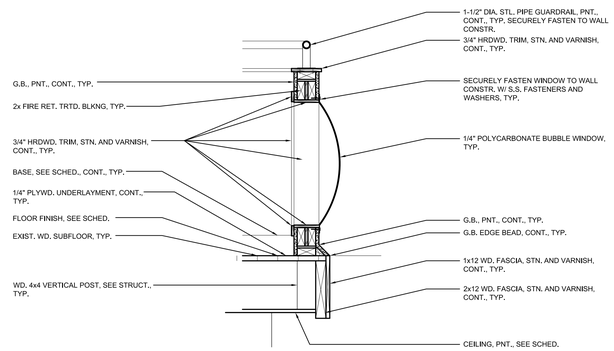

2 A302 SECTION THRU BUBBLE WINDOW
SCALE: 1-1/2" = 1'-0"

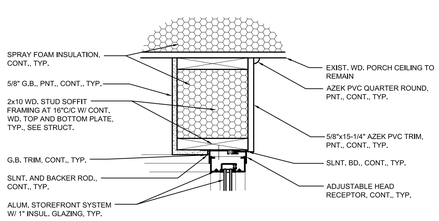

5 A302 HEAD DETAIL AT SAND PORCH
SCALE: 1-1/2" = 1'-0"

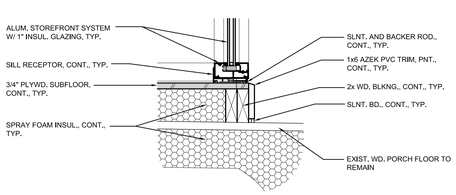

6 A302 SILL DETAIL AT SAND PORCH
SCALE: 1-1/2" = 1'-0"

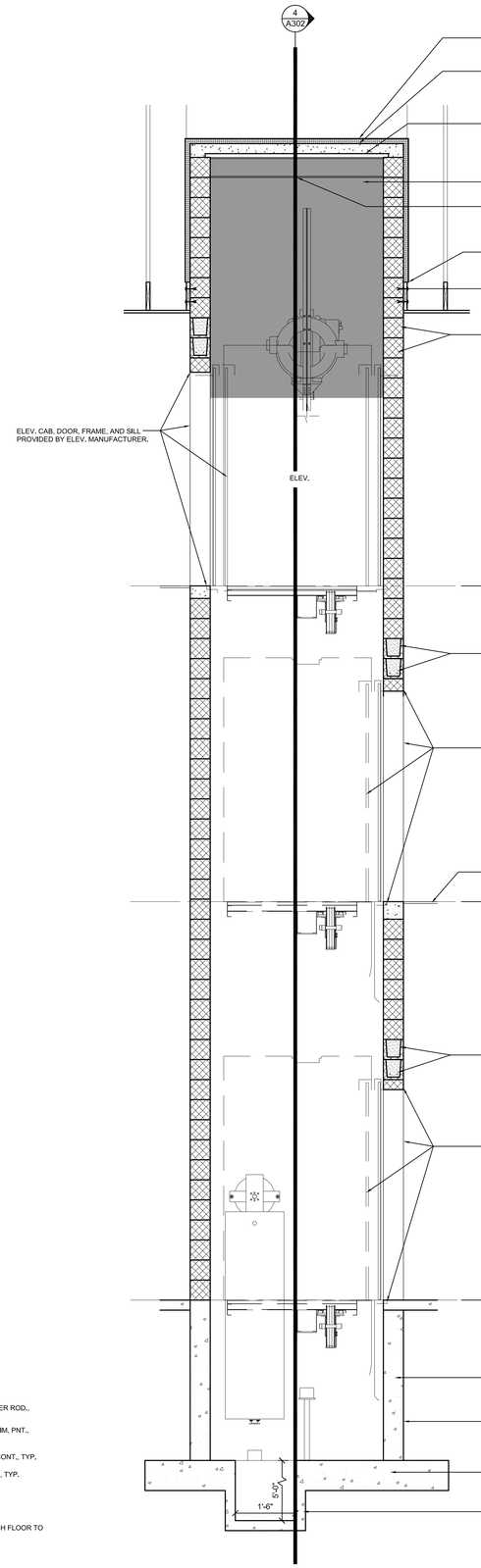

3 A302 SECTION THRU ELEVATOR
SCALE: 1/2" = 1'-0"

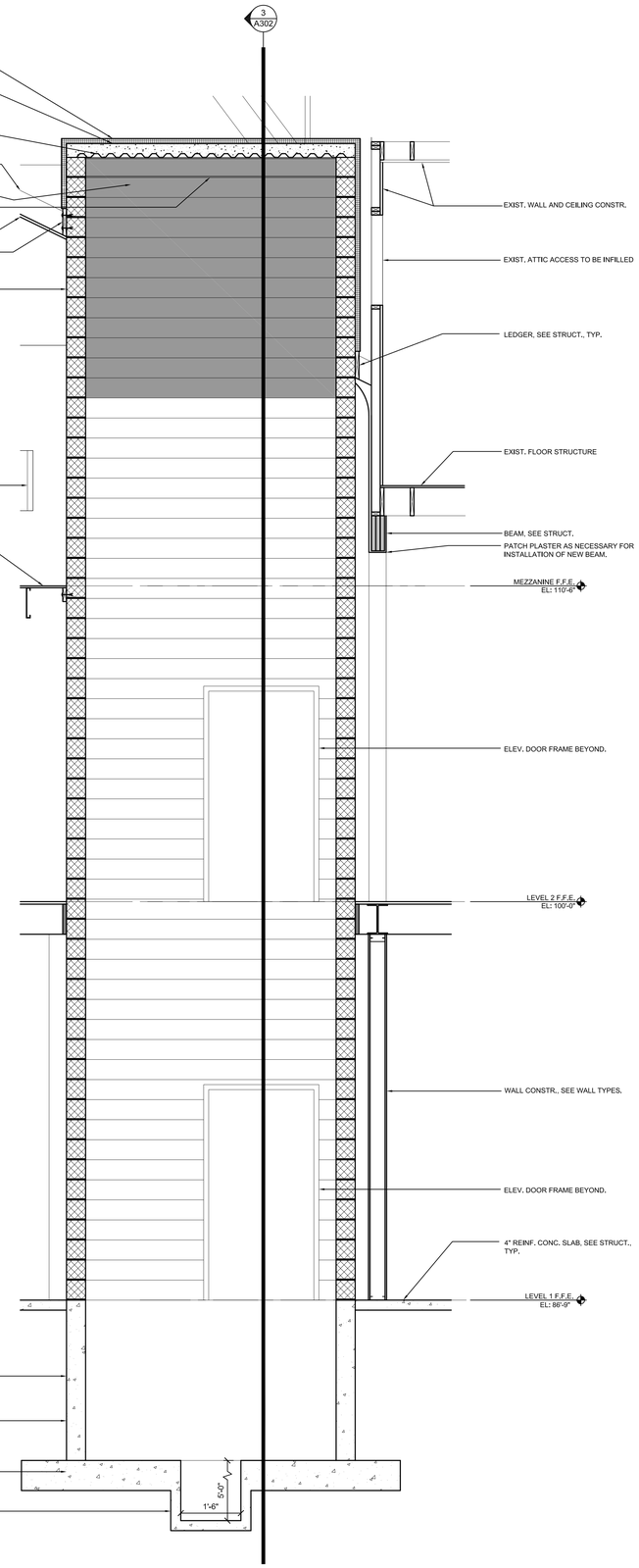

4 A302 SECTION THRU ELEVATOR
SCALE: 1/2" = 1'-0"

architects
planners
designers
2115 East War Memorial Drive
Peoria, Illinois 61614
(309) 685-4752 / (309) 685-4764
www.apacedesign.com
apacedesign

Existing/Revised Partial Sections

Peoria PlayHouse Children's Museum
Peoria Park District
Glen Oak Park Pavillion
Peoria, Illinois 61603

NO.	ISSUE	DATE
1	Bidding Documents	3.19.14

DATE 3.19.14	PROJECT NO. 24905.02
DRAWN BY BLK	SHEET A302
CHECKED SJM	
APPROVED SJM	15 OF 24

CODE

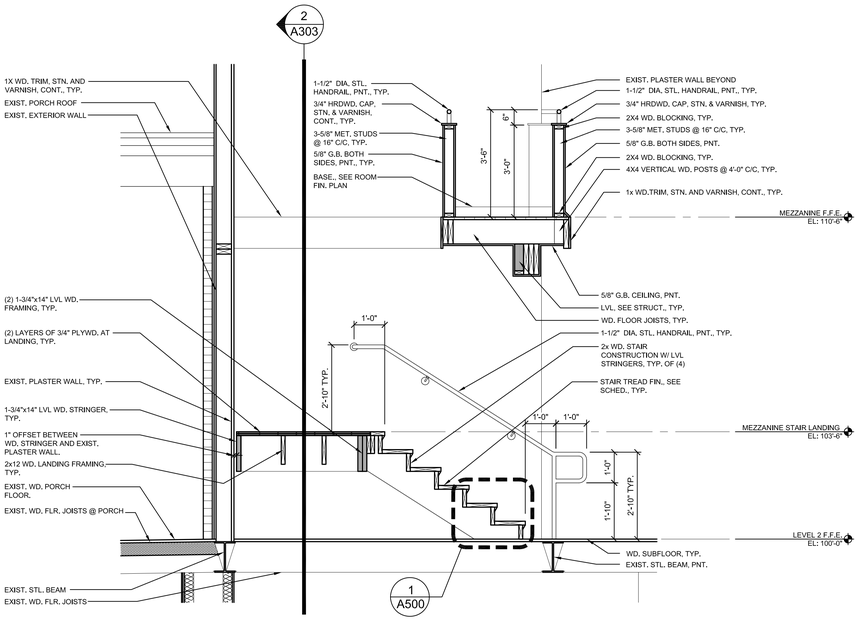

1 A303 SECTION THRU MEZZANINE STAIR
SCALE: 1/2" = 1'-0"

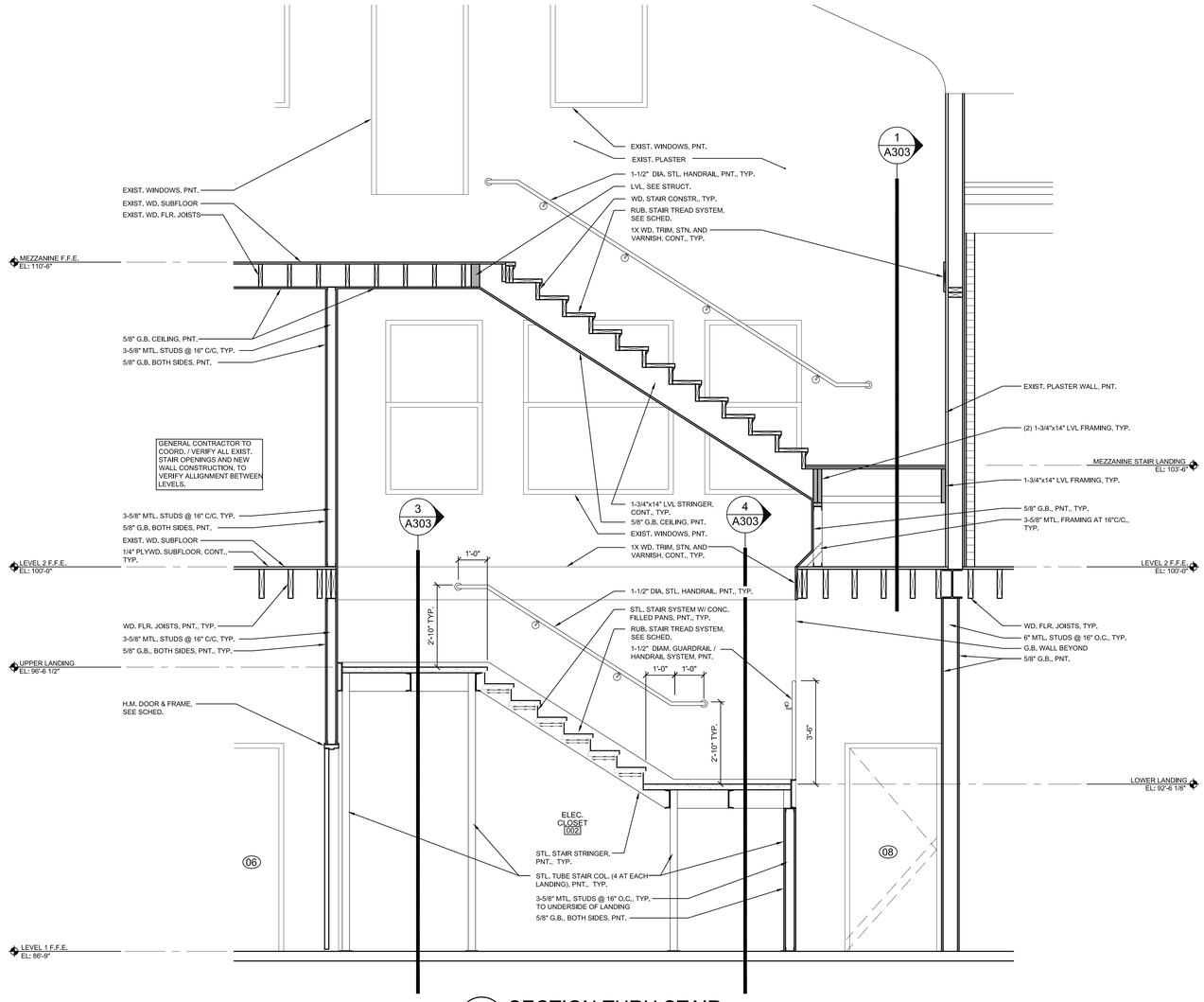

2 A303 SECTION THRU STAIR
SCALE: 1/2" = 1'-0"

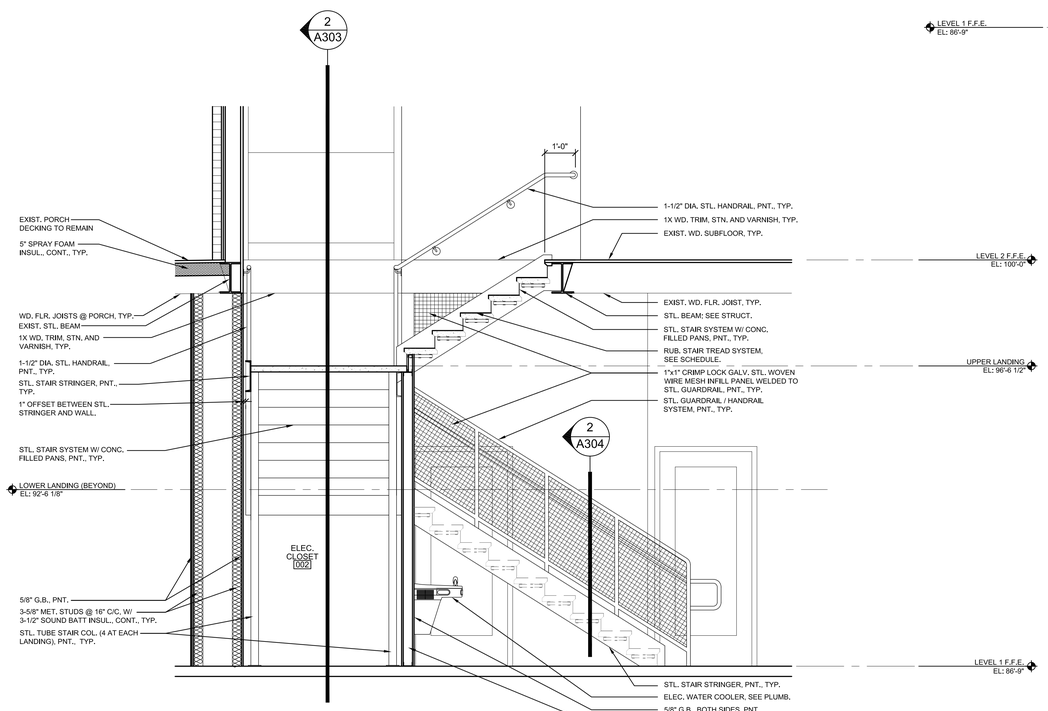

3 A303 SECTION THRU STAIR
SCALE: 1/2" = 1'-0"

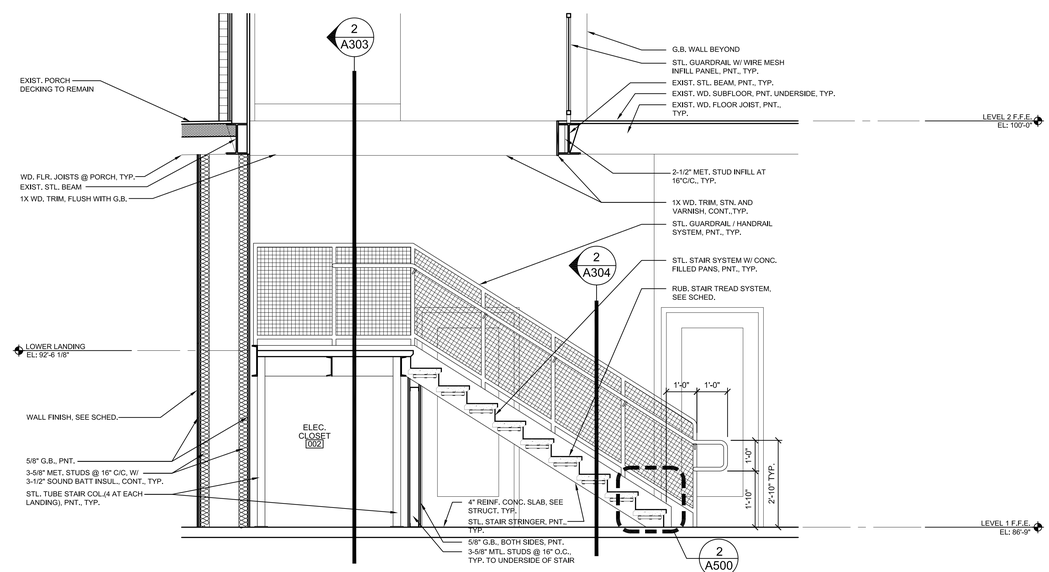

4 A303 SECTION THRU STAIR
SCALE: 1/2" = 1'-0"

architects
planners
designers
2115 East War Memorial Drive
Peoria, Illinois 61614
t.309.685.4772 f.309.685.4784
www.apacedesign.com
apacedesign

Existing/Revised Partial Sections

Peoria PlayHouse Children's Museum
Peoria Park District
Glen Oak Park Pavillion
Peoria, Illinois 61603

NO.	ISSUE	DATE
1	Bidding Documents	3.19.14

DATE 3.19.14	PROJECT NO. 24905.02
DRAWN BY BLK / KRM	SHEET A303
CHECKED SJM	
APPROVED SJM	16 OF 24

CODE

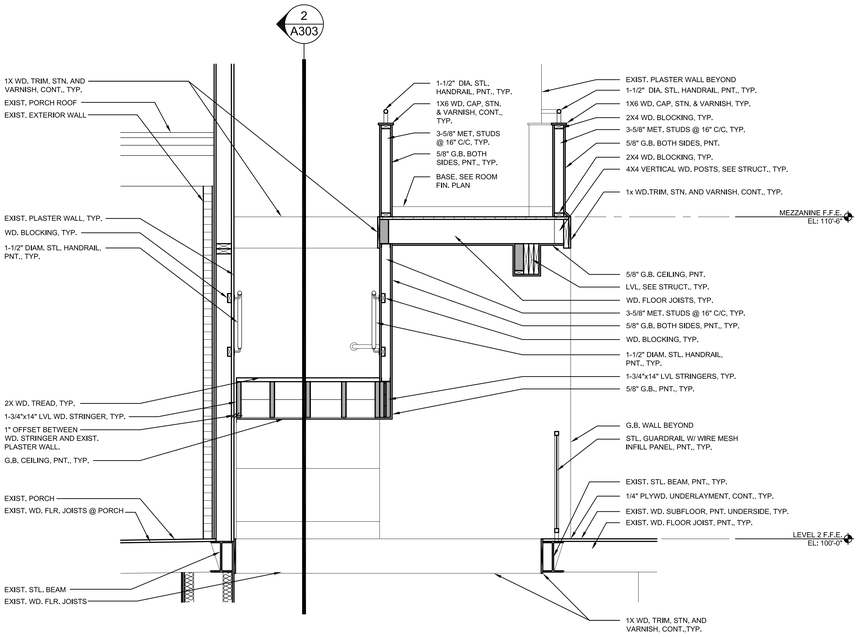

1 A304 SECTION THRU MEZZANINE STAIR
SCALE: 1/2" = 1'-0"

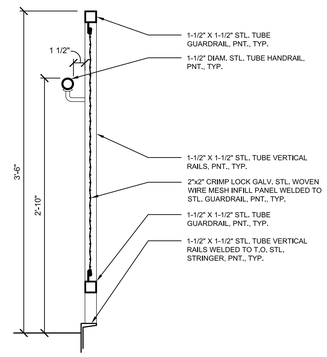

2 A304 SECTION THRU GUARDRAIL / HANDRAIL
SCALE: 1 1/2" = 1'-0"

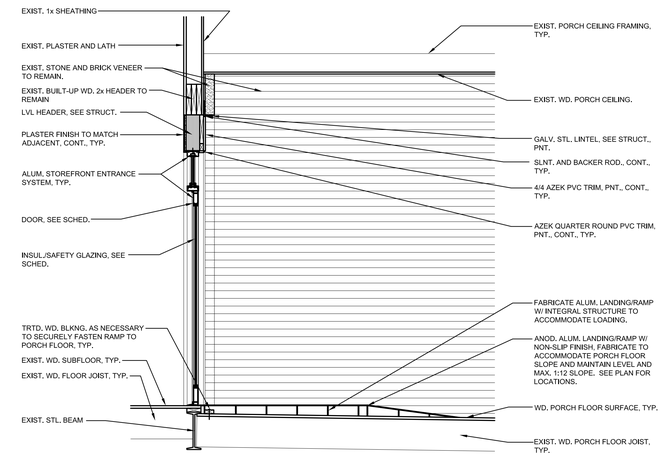

3 A304 SECTION THRU ENTRANCE DOORS
SCALE: 1/2" = 1'-0"

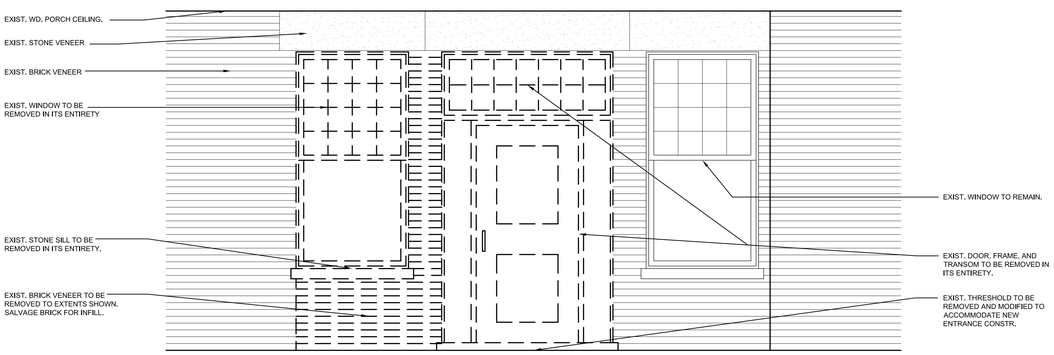

4 A304 EXISTING/DEMO PARTIAL ELEVATION
SCALE: 1/2" = 1'-0"

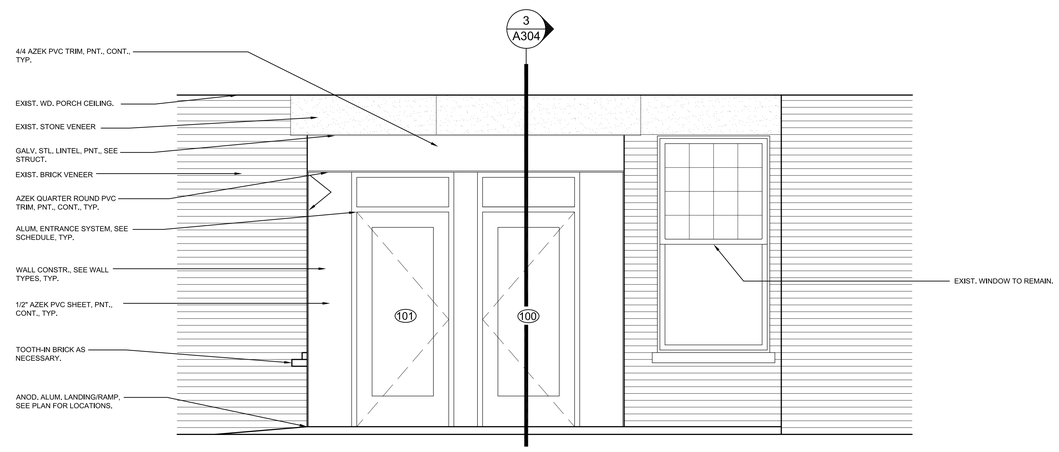

5 A304 EXISTING/REVISED PARTIAL ELEVATION
SCALE: 1/2" = 1'-0"

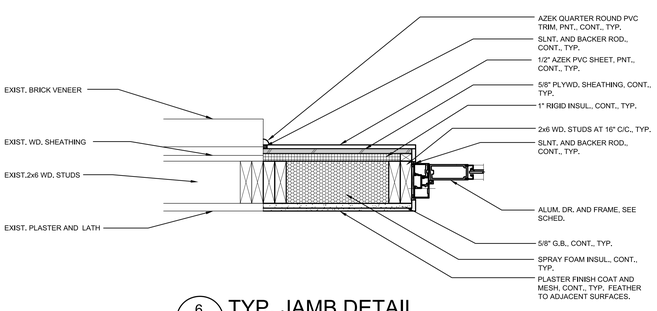

6 A304 TYP. JAMB DETAIL
SCALE: 1-1/2" = 1'-0"

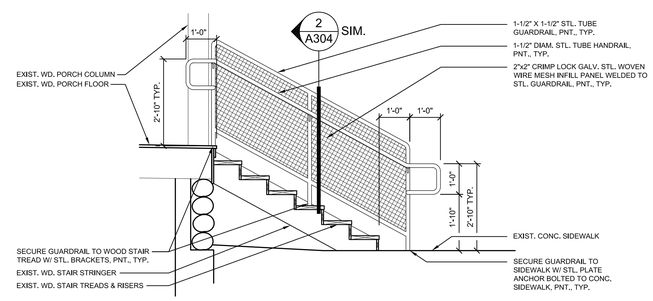

7 A304 TYP. PORCH STAIR GUARDRAIL / HANDRAIL SECTION / ELEVATION
SCALE: 1/2" = 1'-0"

architects
planners
designers
2115 East War Memorial Drive
Peoria, Illinois 61614
(309) 685-4752 / (309) 685-4764
www.apacedesign.com
apacedesign

Existing/Revised Partial Sections/Elevations

Peoria PlayHouse Children's Museum
Peoria Park District
Glen Oak Park Pavillion
Peoria, Illinois 61603

NO.	ISSUE	DATE
1	Bidding Documents	3.19.14

DATE 3.19.14	PROJECT NO. 24905.02
DRAWN BY BLK	SHEET
CHECKED SJM	A304
APPROVED SJM	17 OF 24

CODE

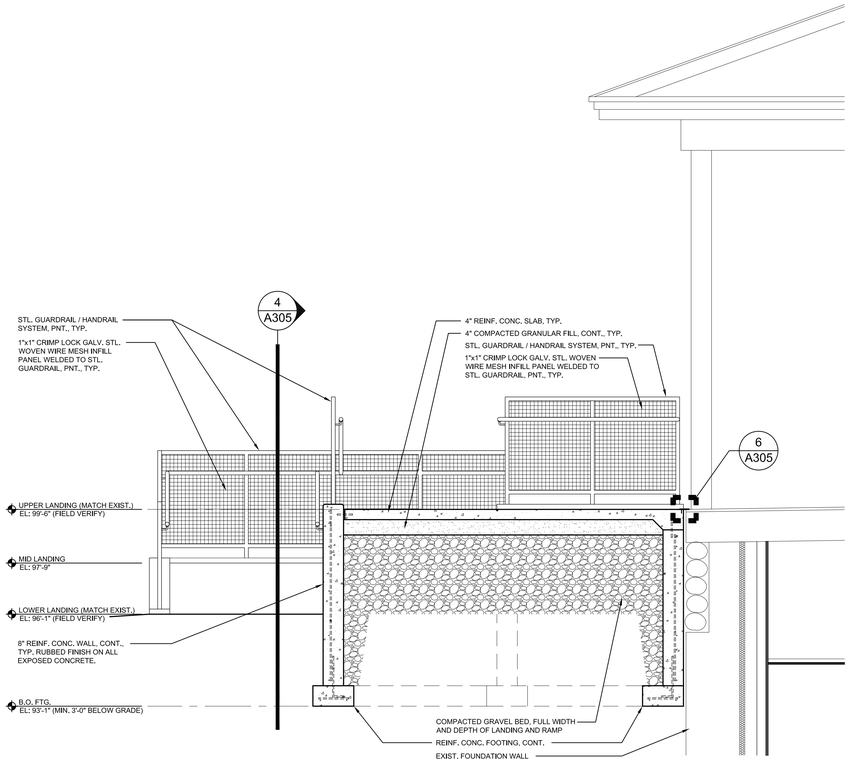

1 A305 SECTION THRU UPPER RAMP LANDING
SCALE: 1/2" = 1'-0"

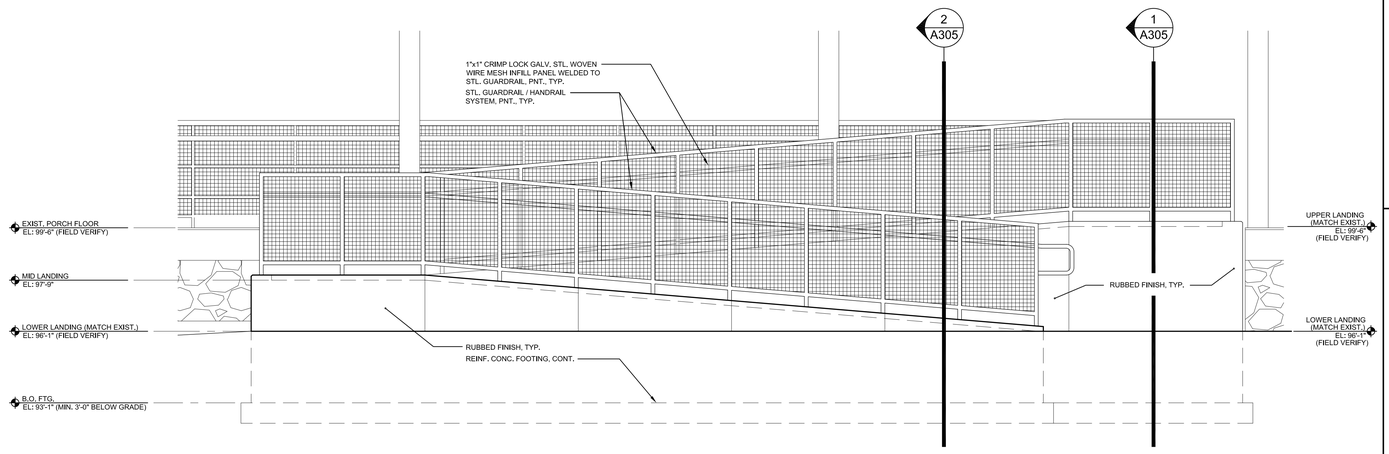

3 A305 ELEVATION OF RAMP
SCALE: 1/2" = 1'-0"

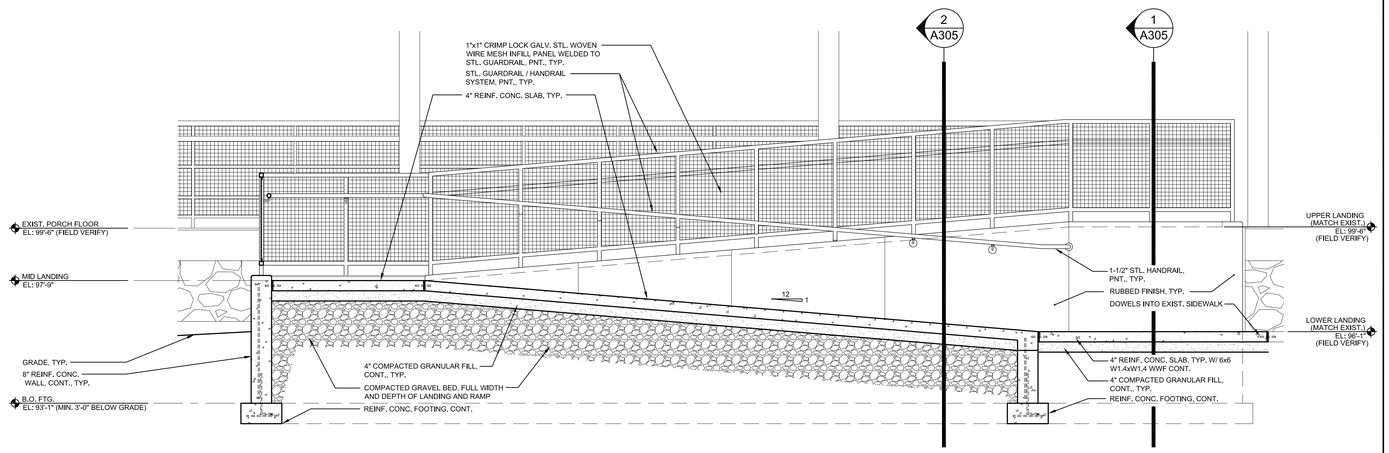

4 A305 SECTION/ELEVATION OF RAMP
SCALE: 1/2" = 1'-0"

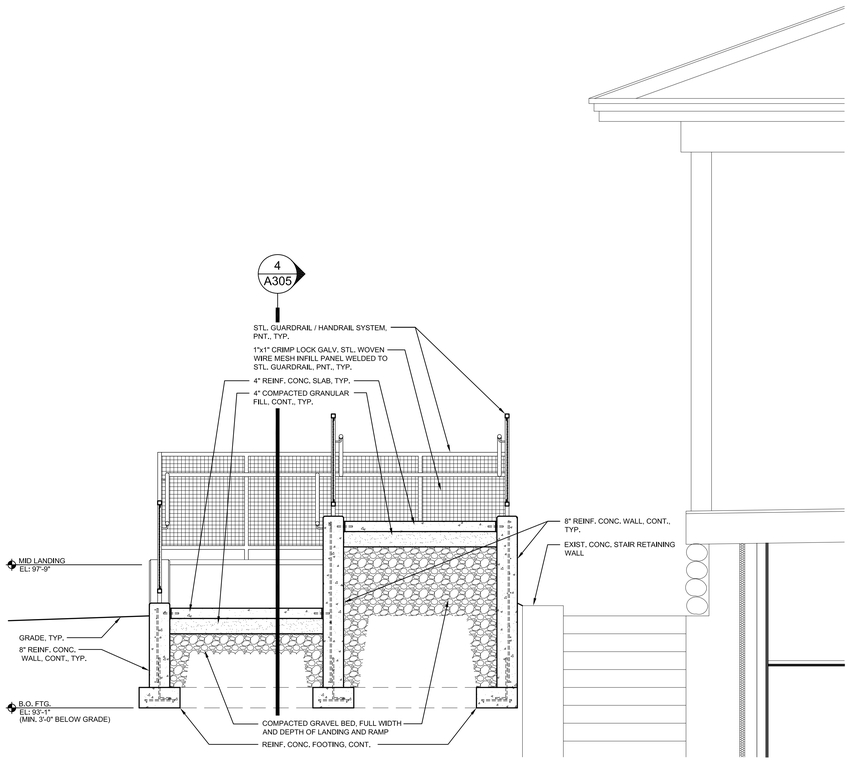

2 A305 TYP. SECTION THRU UPPER RAMP
SCALE: 1/2" = 1'-0"

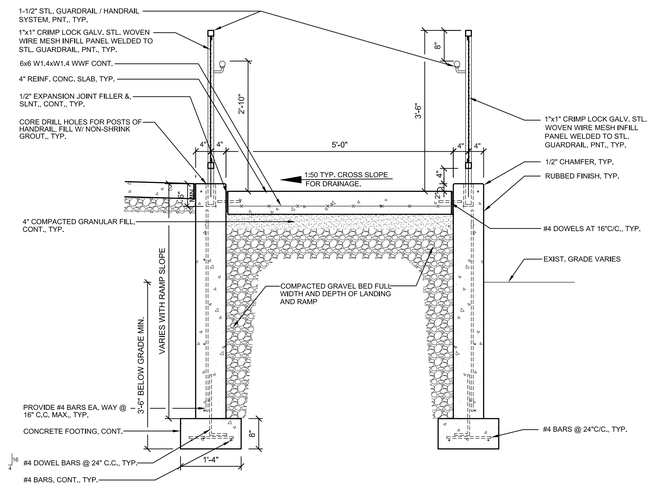

5 A305 TYP. SECTION THRU RAMP
SCALE: 3/4" = 1'-0"

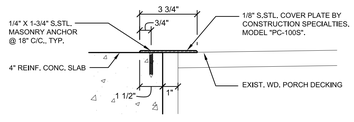

6 A305 DETAIL @ RAMP / PORCH CONNECTION
SCALE: 3" = 1'-0"

architects
landscape
designers
2115 East War Memorial Drive
Peoria, Illinois 61614
(309) 685-4721 / (309) 685-4784
www.apacedesign.com
apacedesign

Ramp Sections and Elevations (Alt. Bid No. 4)

Peoria PlayHouse Children's Museum
Peoria Park District
Glen Oak Park Pavillion
Peoria, Illinois 61603

NO.	ISSUE	DATE
1	Bidding Documents	3.19.14

DATE 3.19.14	PROJECT NO. 24905.02
DRAWN BY BLK	SHEET
CHECKED SJM	A305
APPROVED SJM	18 OF 24

CODE

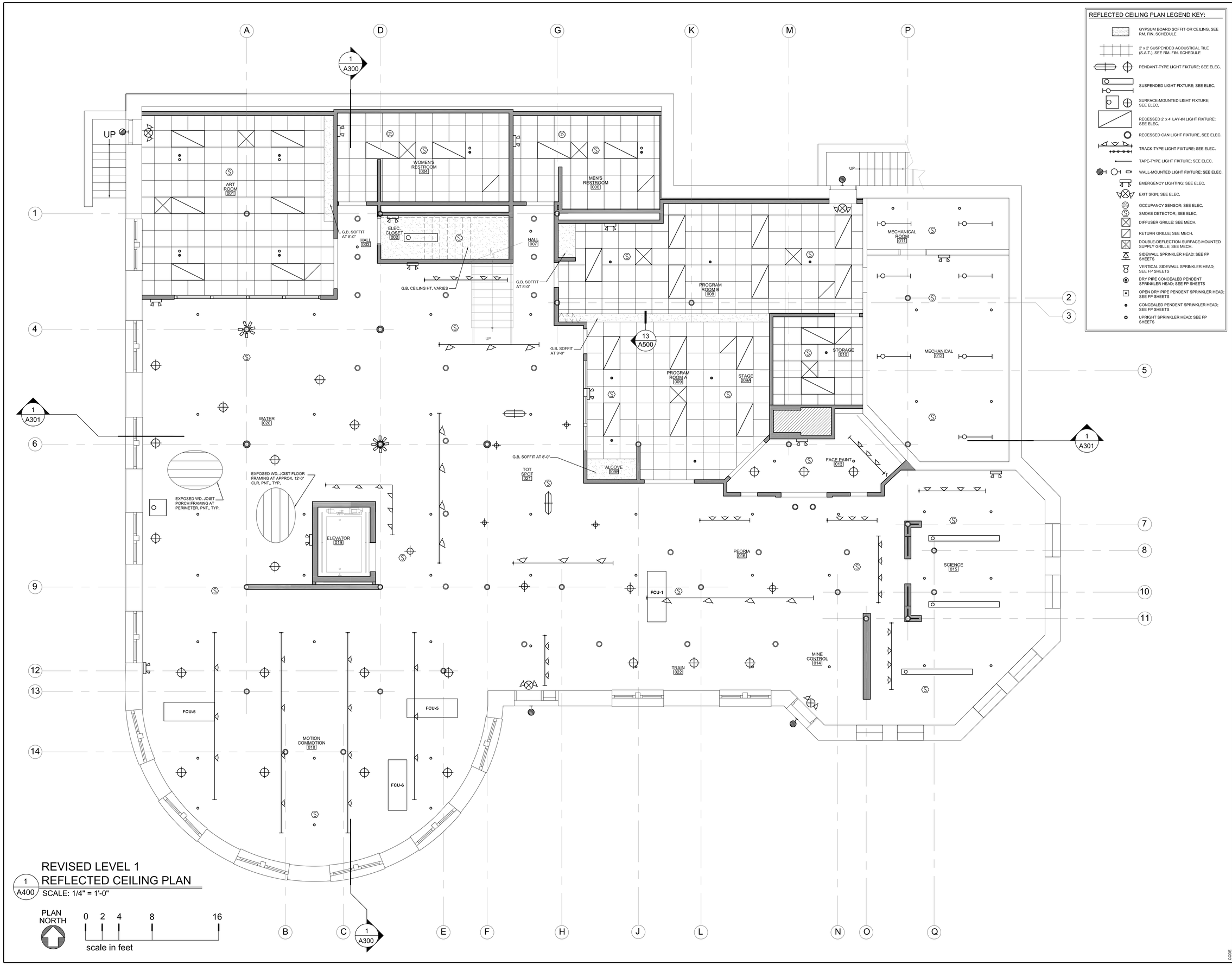

REVISED LEVEL 1 REFLECTED CEILING PLAN

SCALE: 1/4" = 1'-0"

apacedesign
architects engineers planners
Corporate Office
2112 Fairview Memorial Drive
Peoria, Illinois 61614
Phone 309.693.4700
Fax 309.693.4784
www.apacedesign.com

Revised Level 1 Reflected Ceiling Plan

Peoria PlayHouse Children's Museum
Peoria Park District
Glen Oak Park Pavillion
Peoria, IL 61603

NO.	ISSUE	DATE
1	Bidding Documents	3.19.14

DATE 3.19.14	PROJECT NO. 24905.02
DRAWN BY BLK / KRM	SHEET A400
CHECKED BLK	
APPROVED SJM	19 OF 24

CODE

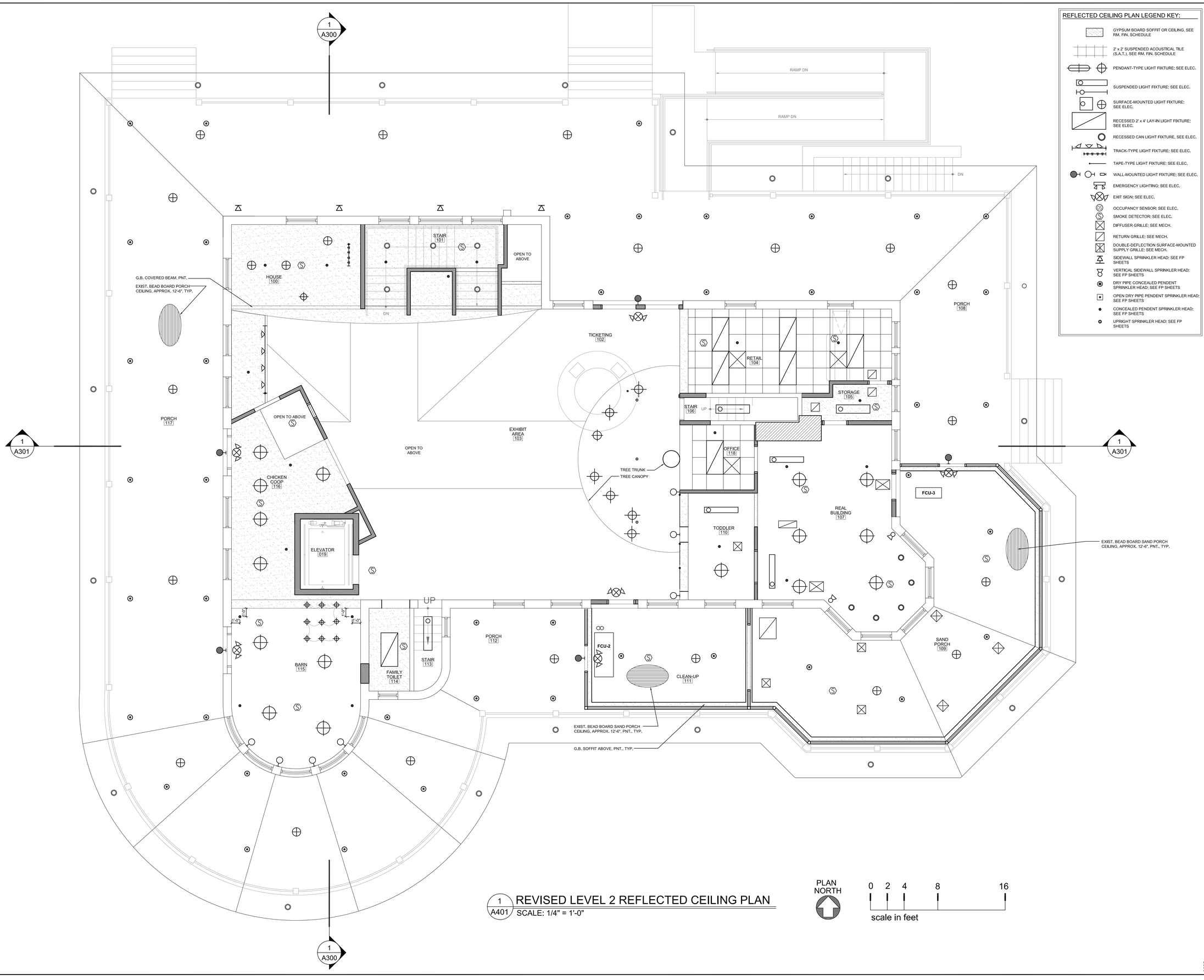

1 A401 REVISED LEVEL 2 REFLECTED CEILING PLAN
SCALE: 1/4" = 1'-0"

REFLECTED CEILING PLAN LEGEND KEY:

- GYPSUM BOARD SOFFIT OR CEILING, SEE RM. FIN. SCHEDULE
- 2' x 2' SUSPENDED ACOUSTICAL TILE (S.A.T.), SEE RM. FIN. SCHEDULE
- PENDANT-TYPE LIGHT FIXTURE; SEE ELEC.
- SUSPENDED LIGHT FIXTURE; SEE ELEC.
- SURFACE-MOUNTED LIGHT FIXTURE; SEE ELEC.
- RECESSED 2' x 4' LAY-IN LIGHT FIXTURE; SEE ELEC.
- RECESSED CAN LIGHT FIXTURE, SEE ELEC.
- TRACK-TYPE LIGHT FIXTURE; SEE ELEC.
- TAPE-TYPE LIGHT FIXTURE; SEE ELEC.
- WALL-MOUNTED LIGHT FIXTURE; SEE ELEC.
- EMERGENCY LIGHTING; SEE ELEC.
- EXIT SIGN; SEE ELEC.
- OCCUPANCY SENSOR; SEE ELEC.
- SMOKE DETECTOR; SEE ELEC.
- DIFFUSER GRILLE; SEE MECH.
- RETURN GRILLE; SEE MECH.
- DOUBLE-DEFLECTION SURFACE-MOUNTED SUPPLY GRILLE; SEE MECH.
- SIDEWALL SPRINKLER HEAD; SEE FP SHEETS
- VERTICAL SIDEWALL SPRINKLER HEAD; SEE FP SHEETS
- DRY PIPE CONCEALED PENDENT SPRINKLER HEAD; SEE FP SHEETS
- OPEN DRY PIPE PENDENT SPRINKLER HEAD; SEE FP SHEETS
- CONCEALED PENDENT SPRINKLER HEAD; SEE FP SHEETS
- UPRIGHT SPRINKLER HEAD; SEE FP SHEETS

apacedesign
architects
engineers
planners
2112 Fairway
Bloomington, Minnesota Drive
Suite 1 Block 4 Floor
Bloomington, Illinois 61704
www.apacedesign.com

Revised Level 2 Reflected Ceiling Plan

Peoria PlayHouse Children's Museum
Peoria Park District
Glen Oak Park Pavillion
Peoria, IL 61603

NO.	ISSUE	DATE
1	Bidding Documents	3.19.14

DATE 3.19.14	PROJECT NO. 24905.02
DRAWN BY BLK	SHEET
CHECKED BLK	A401
APPROVED SJM	20 OF 24

CODE

REVISED KEYED NOTES: APPLIES TO THIS SHEET ONLY

01 = PATCH EXIST. PLASTER CEILING AT ELEVATOR PENETRATION ON ALL SIDES. PROVIDE MISC. FRAMING AS NECESSARY, TYP.

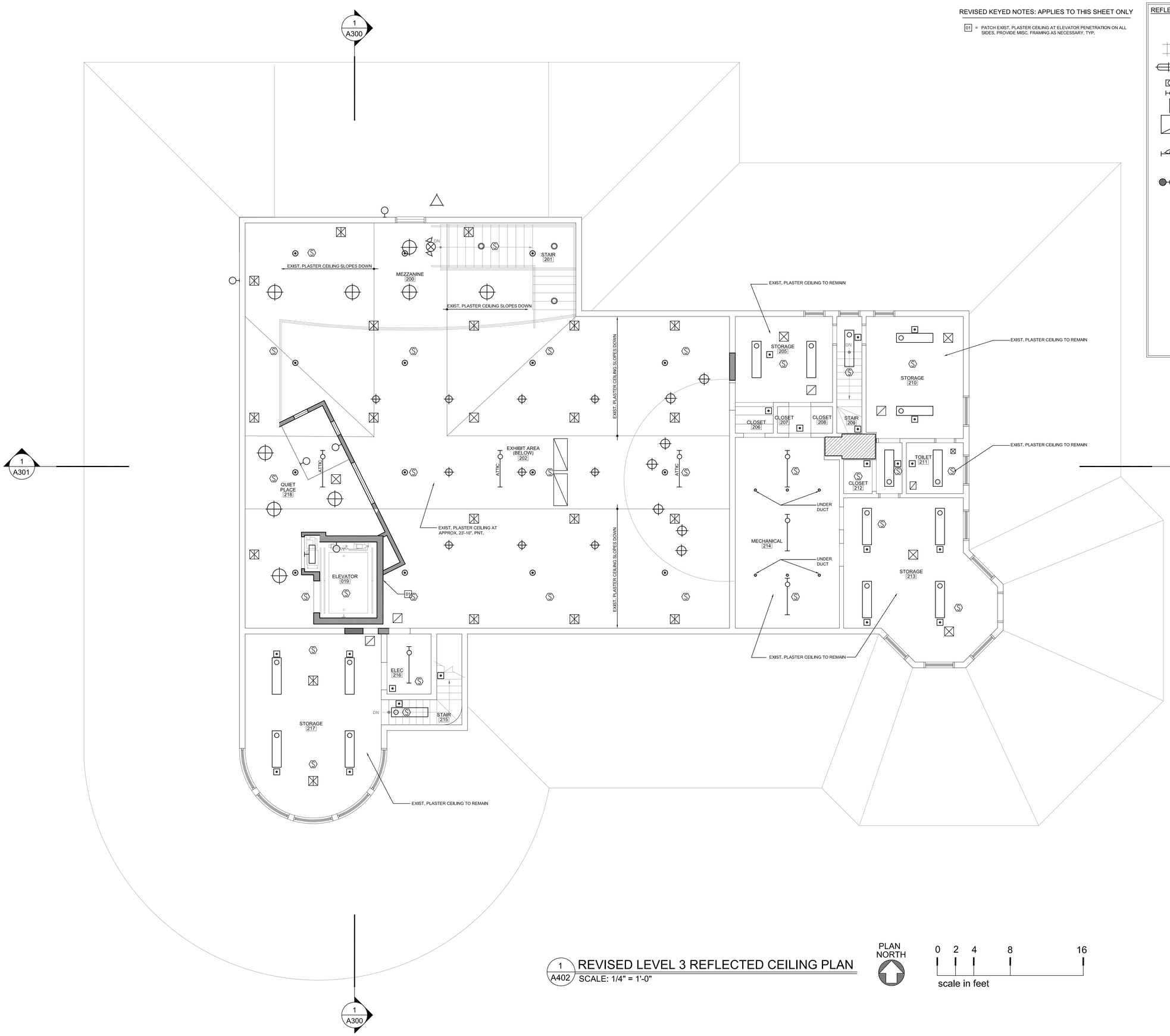

REFLECTED CEILING PLAN LEGEND KEY:

- GYPSUM BOARD SOFFIT OR CEILING, SEE RM. FIN. SCHEDULE
- 2' x 2' SUSPENDED ACOUSTICAL TILE (S.A.T.), SEE RM. FIN. SCHEDULE
- PENDANT-TYPE LIGHT FIXTURE; SEE ELEC.
- SUSPENDED LIGHT FIXTURE; SEE ELEC.
- SURFACE-MOUNTED LIGHT FIXTURE; SEE ELEC.
- RECESSED 2' x 4' LAY-IN LIGHT FIXTURE; SEE ELEC.
- RECESSED CAN LIGHT FIXTURE, SEE ELEC.
- TRACK-TYPE LIGHT FIXTURE; SEE ELEC.
- TAPE-TYPE LIGHT FIXTURE; SEE ELEC.
- WALL-MOUNTED LIGHT FIXTURE; SEE ELEC.
- EMERGENCY LIGHTING; SEE ELEC.
- EXIT SIGN; SEE ELEC.
- OCCUPANCY SENSOR; SEE ELEC.
- SMOKE DETECTOR; SEE ELEC.
- DIFFUSER GRILLE; SEE MECH.
- RETURN GRILLE; SEE MECH.
- DOUBLE-DEFLECTION SURFACE-MOUNTED SUPPLY GRILLE; SEE MECH.
- SIDEWALL SPRINKLER HEAD; SEE FP SHEETS
- VERTICAL SIDEWALL SPRINKLER HEAD; SEE FP SHEETS
- DRY PIPE CONCEALED PENDENT SPRINKLER HEAD; SEE FP SHEETS
- OPEN DRY PIPE PENDENT SPRINKLER HEAD; SEE FP SHEETS
- CONCEALED PENDENT SPRINKLER HEAD; SEE FP SHEETS
- UPRIGHT SPRINKLER HEAD; SEE FP SHEETS

1 A402 REVISED LEVEL 3 REFLECTED CEILING PLAN
SCALE: 1/4" = 1'-0"

PLAN NORTH

0 2 4 8 16
scale in feet

apacedesign
architects
planners
designers
2115 E. Empire, Memorial Drive
Bloomington, IL 61704
(309) 662-4212 (309) 663-4784
www.apacedesign.com

Revised Level 3 Reflected Ceiling Plan

Peoria PlayHouse Children's Museum
Peoria Park District
Glen Oak Park Pavillion
Peoria, IL 61603

NO.	ISSUE	DATE
1	Bidding Documents	3.19.14

DATE 3.19.14	PROJECT NO. 24905.02
DRAWN BY BLK / KRM	SHEET A402
CHECKED BLK	
APPROVED SJM	21 OF 24

CODE

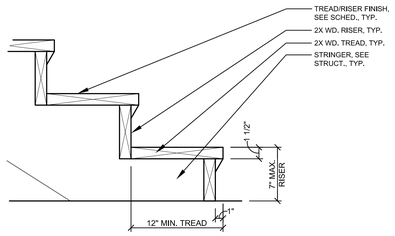

1 A500 TYP. WOOD STAIR DETAIL
SCALE: 1 1/2" = 1'-0"

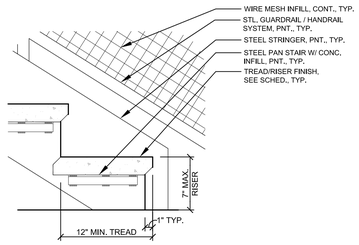

2 A500 TYP. STL. PAN STAIR DETAIL
SCALE: 1 1/2" = 1'-0"

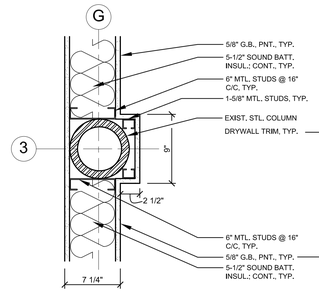

3 A500 PLAN DETAIL
SCALE: 1 1/2" = 1'-0"

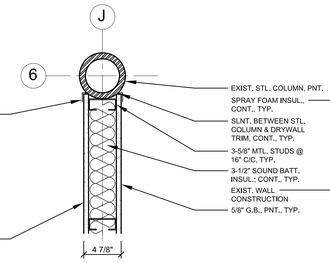

4 A500 PLAN DETAIL
SCALE: 1 1/2" = 1'-0"

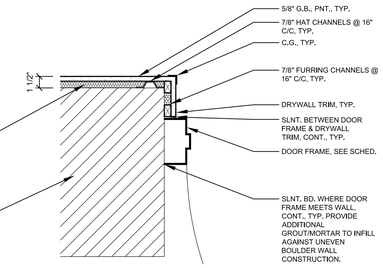

5 A500 TYP. DR. JAMB DETAIL
SCALE: 1 1/2" = 1'-0"

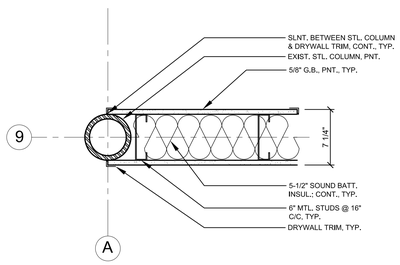

6 A500 PLAN DETAIL
SCALE: 1 1/2" = 1'-0"

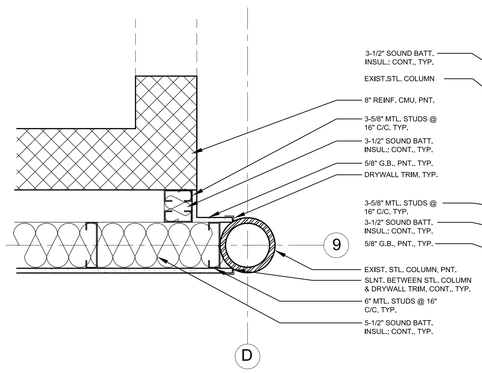

7 A500 PLAN DETAIL
SCALE: 1 1/2" = 1'-0"

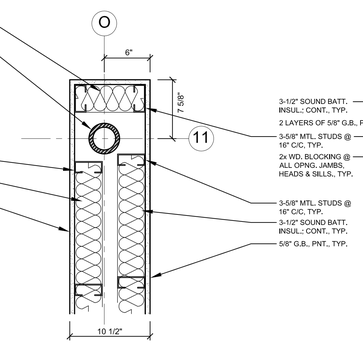

8 A500 PLAN DETAIL
SCALE: 1 1/2" = 1'-0"

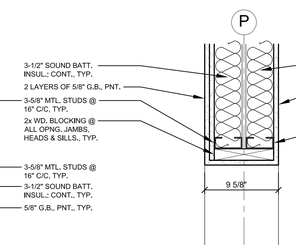

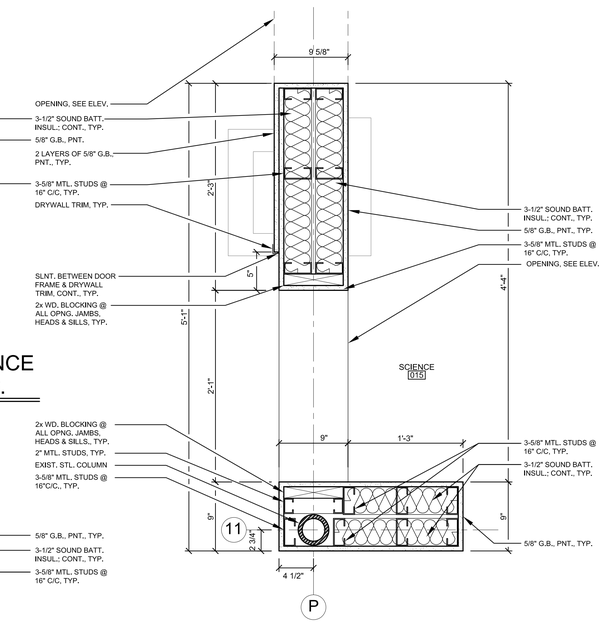

PLAN DETAIL @ SCIENCE LAB 015 UPPER OPNG.
9 A500 SCALE: 1 1/2" = 1'-0"

PLAN DETAIL @ SCIENCE LAB 015 LOWER OPNGS.
10 A500 SCALE: 1 1/2" = 1'-0"

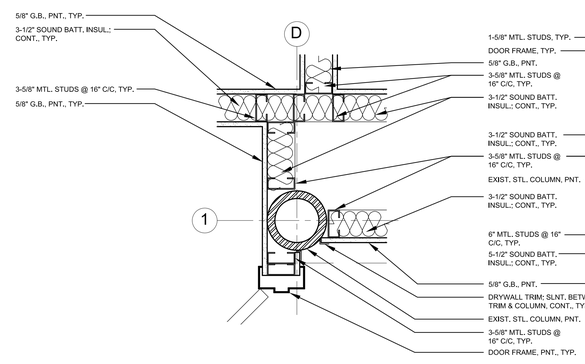

11 A500 PLAN DETAIL
SCALE: 1 1/2" = 1'-0"

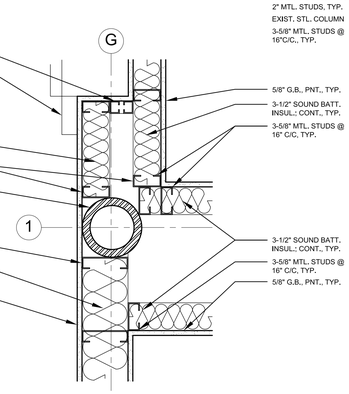

12 A500 PLAN DETAIL
SCALE: 1 1/2" = 1'-0"

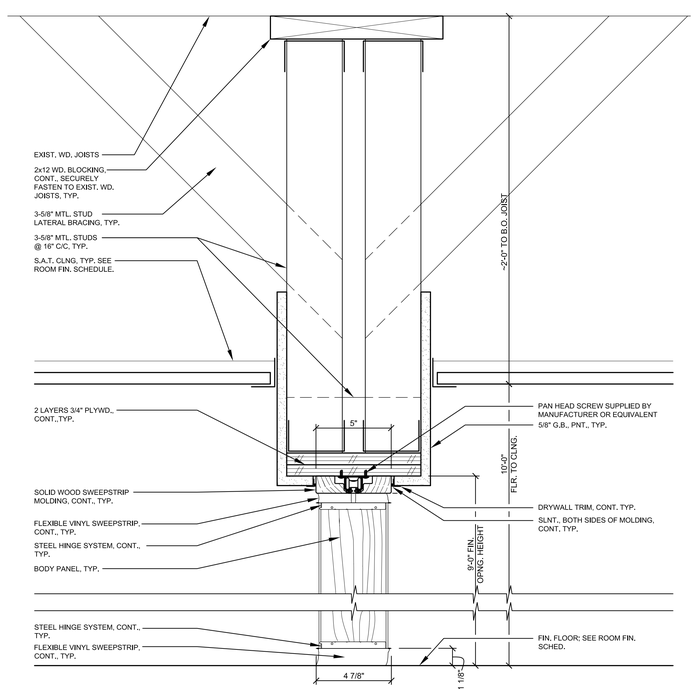

13 A500 PANEL FOLDING DOOR HEAD DETAIL
SCALE: 3" = 1'-0"

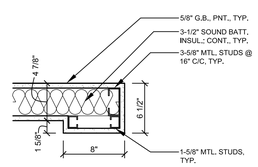

14 A500 PLAN DETAIL
SCALE: 1 1/2" = 1'-0"

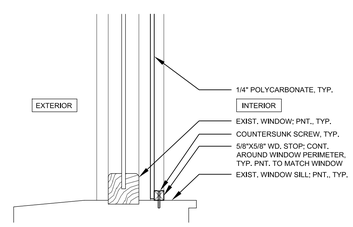

TYP. WINDOW GUARD DETAIL @ SILL (JAMB SIM.)
15 A500 SCALE: 3" = 1'-0"

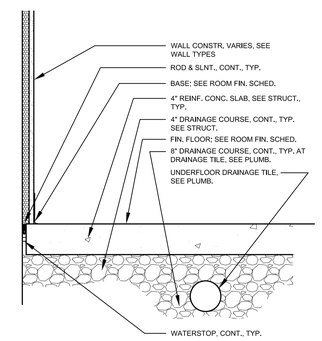

16 A500 TYP. WATERSTOP DETAIL
SCALE: 1 1/2" = 1'-0"

architects
engineers
designers
2115 East War Memorial Drive
Peoria, Illinois 61614
(309) 685-4752 / (309) 685-4764
www.apacedesign.com
apacedesign

Details

Peoria PlayHouse Children's Museum
Peoria Park District
Glen Oak Park Pavillion
Peoria, Illinois 61603

NO.	ISSUE	DATE
1	Bidding Documents	3.19.14

DATE 3.19.14	PROJECT NO. 24905.02
DRAWN BY KRM	SHEET
CHECKED BLK	A500
APPROVED SJM	22 OF 24

CODE

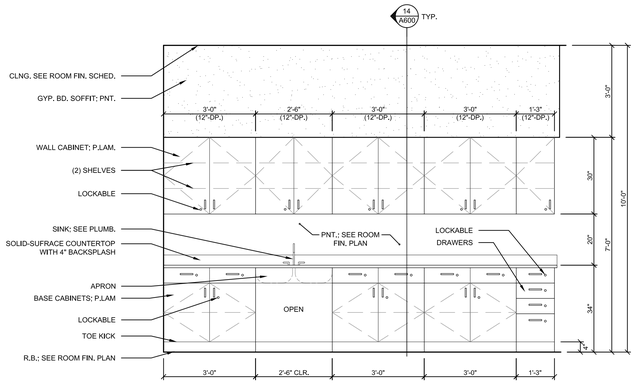

1 A600 ART ROOM 001 CASEWORK ELEVATION
SCALE: 1/2" = 1'-0"

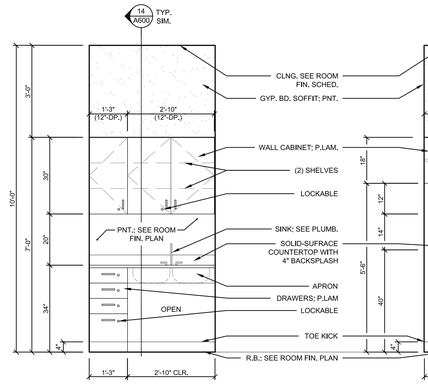

2 A600 PROG. ROOM B 008 CASEWORK ELEVATION
SCALE: 1/2" = 1'-0"

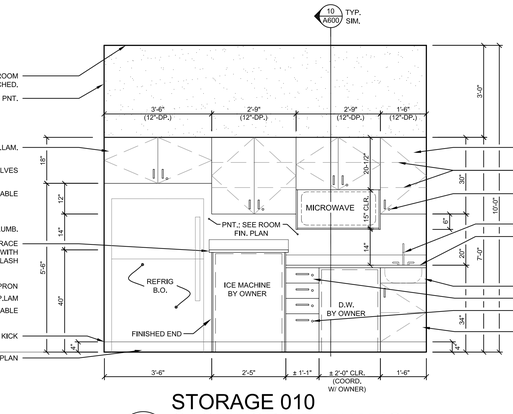

3 A600 STORAGE 010 CASEWORK ELEVATION
SCALE: 1/2" = 1'-0"

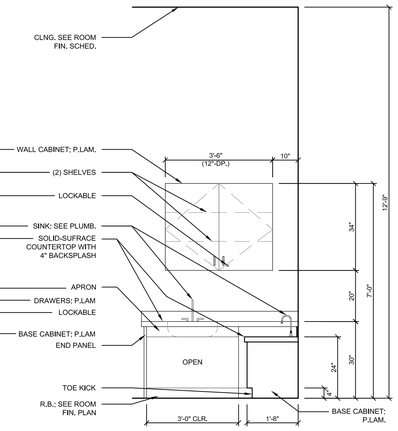

4 A600 REAL BUILDING 107 CASEWORK ELEVATION
SCALE: 1/2" = 1'-0"

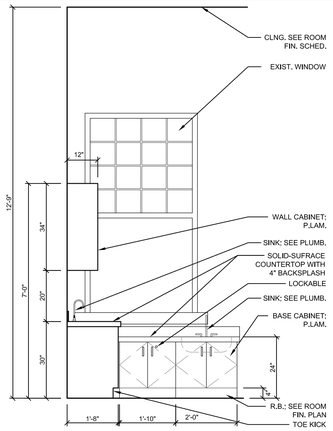

5 A600 REAL BUILDING 107 CASEWORK ELEVATION
SCALE: 1/2" = 1'-0"

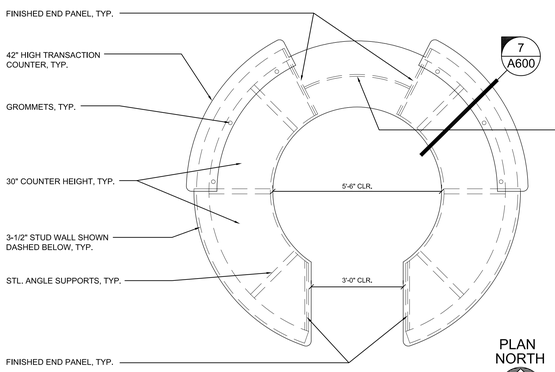

6 A600 TICKETING 102 DESK
SCALE: 1/2" = 1'-0"

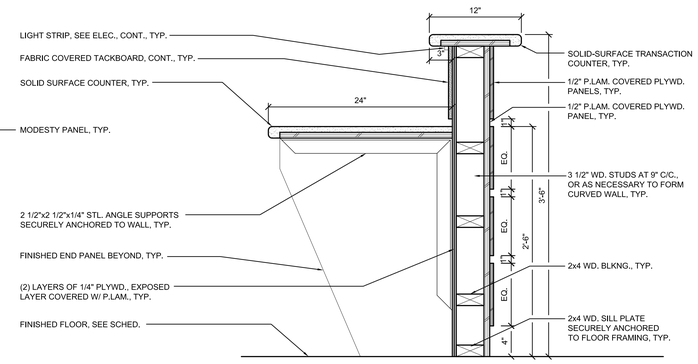

7 A600 SECTION THRU TICKETING 102 DESK
SCALE: 1 1/2" = 1'-0"

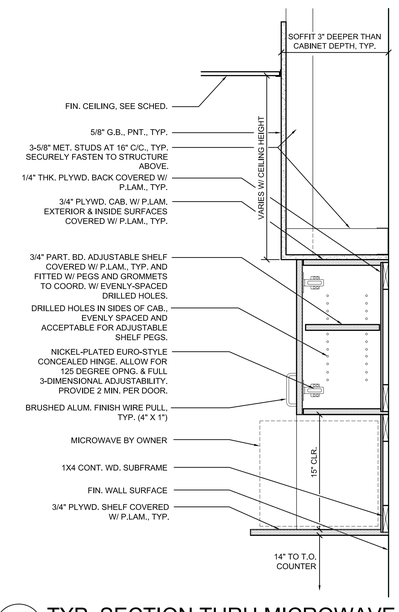

10 A600 TYP. SECTION THRU MICROWAVE CAB.
SCALE: 1 1/2" = 1'-0"

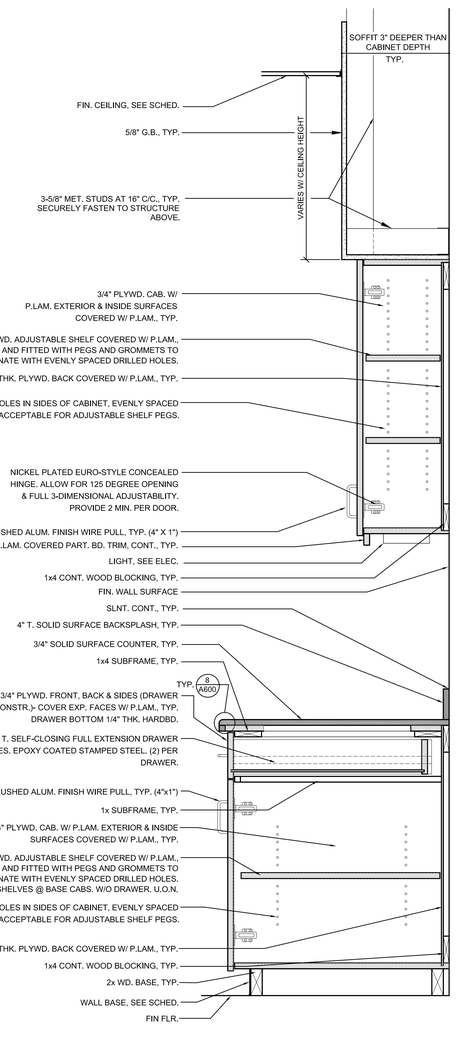

14 A600 TYP. SECTION THRU CASEWORK
SCALE: 1 1/2" = 1'-0"

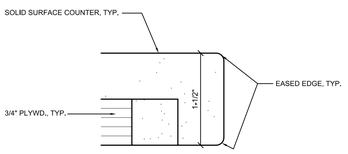

8 A600 EDGE DETAIL
SCALE: FULL SIZE

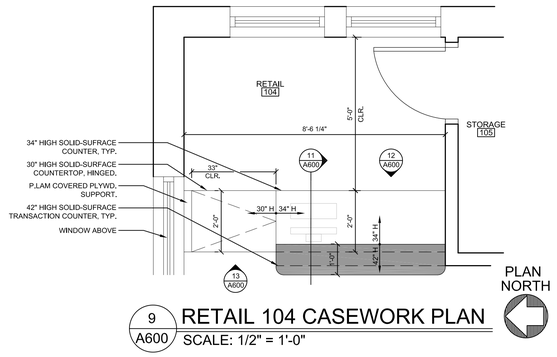

9 A600 RETAIL 104 CASEWORK PLAN
SCALE: 1/2" = 1'-0"

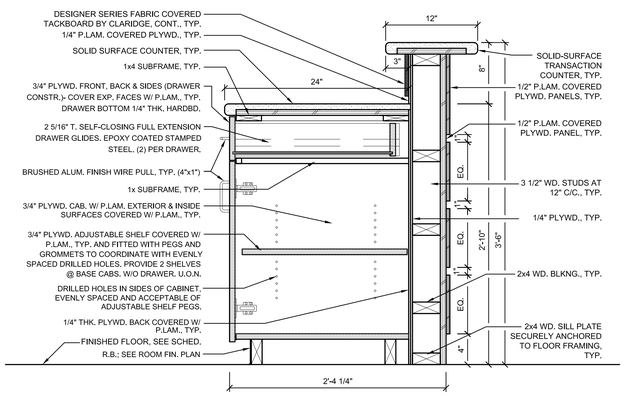

11 A600 RETAIL 104 CASEWORK SECTION
SCALE: 1 1/2" = 1'-0"

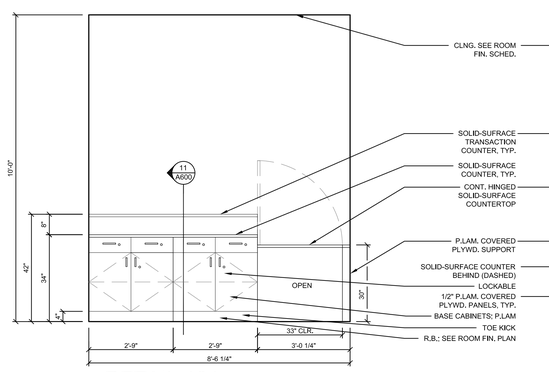

12 A600 RETAIL 104 CASEWORK ELEVATION
SCALE: 1/2" = 1'-0"

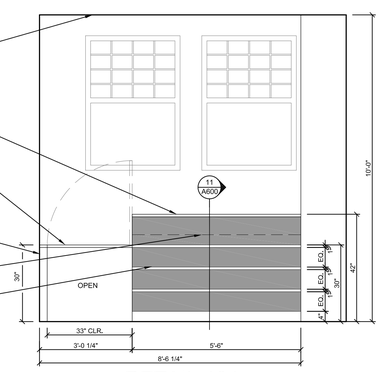

13 A600 RETAIL 104 CASEWORK ELEVATION
SCALE: 1/2" = 1'-0"

apacedesign
architects engineers planners
2932 Fairhill
Peoria, Arbor Municipal Drive
Peoria, Illinois 61615
Phone 309.691.6100
Fax 309.691.6108
www.apacedesign.com

Interior Casework and Elevations

Peoria PlayHouse Children's Museum
Peoria Park District
Glen Oak Park Pavillion
Peoria, IL 61603

NO.	ISSUE	DATE
1	Bidding Documents	3.19.14

DATE 3.19.14	PROJECT NO. 24905.02
DRAWN BY BLK / KRM	SHEET
CHECKED BLK	A600
APPROVED SJM	23 OF 24

CODE

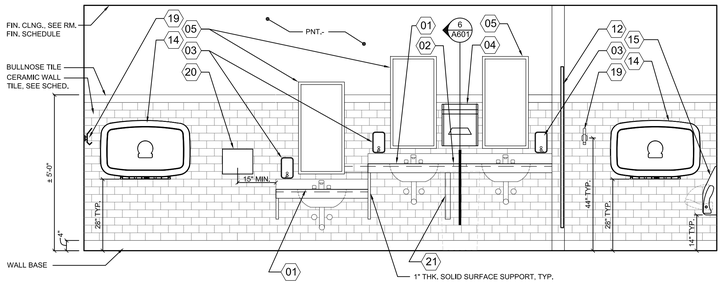

1 A601 WOMEN'S RESTROOM 004 ELEVATION
SCALE: 1/2" = 1'-0"

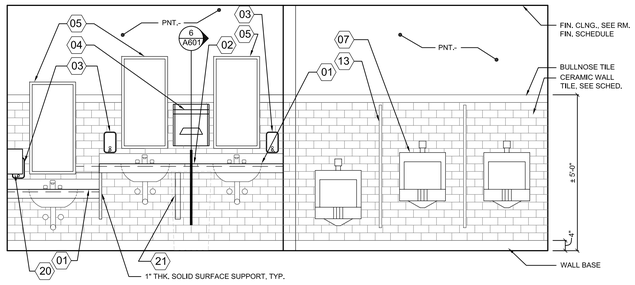

2 A601 MEN'S RESTROOM 006 ELEVATION
SCALE: 1/2" = 1'-0"

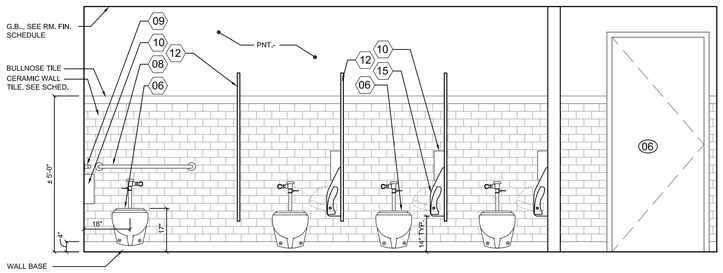

3 A601 WOMEN'S RESTROOM 004 ELEVATION
SCALE: 1/2" = 1'-0"

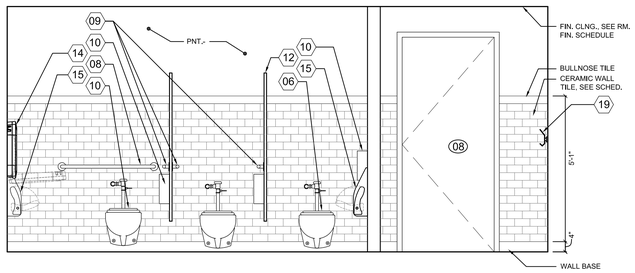

4 A601 MEN'S RESTROOM 006 ELEVATION
SCALE: 1/2" = 1'-0"

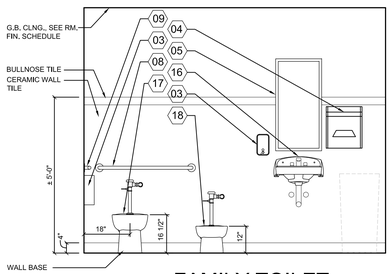

5 A601 FAMILY TOILET 114 ELEVATION
SCALE: 1/2" = 1'-0"

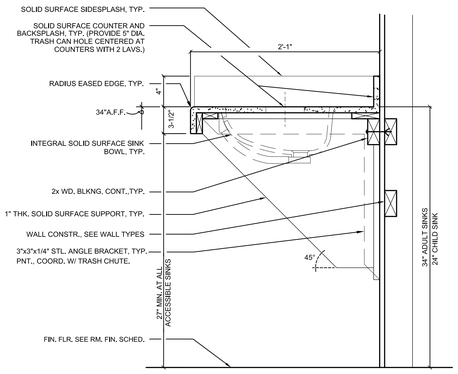

6 A601 VANITY TOP & SUPPORT DETAIL
SCALE: 1 1/2" = 1'-0"
(@ WOMEN'S 004 & MEN'S 006)

KEYED NOTES: APPLY TO THIS SHEET ONLY

01 SOLID SURFACE COUNTERTOP W/ INTREGAL SOLID SURFACE LAVATORY BOWLS; COORD. W/ PLUMBING. SEE DETAIL 6/A601.

02 5" DIA. TRASH HOLE IN COUNTER, CENTERED BETWEEN LAVS, MOVABLE WASTE CAN UNDER COUNTER, BY OWNER.

03 SURFACE-MOUNTED SOAP DISPENSER, OWNER PROVIDED / CONTRACTOR INSTALLED, TYP.

04 SURFACE-MOUNTED PAPER TOWEL DISPENSER, OWNER PROVIDED / CONTRACTOR INSTALLED, TYP.

05 18"x36" WALL-HUNG MIRROR, CONTRACTOR PROVIDED / CONTRACTOR INSTALLED, TYP. PROVIDE FIN. BLOCKING BEHIND MIRROR ABOVE TILE WAINSCOT.

06 WALL-MOUNTED WATER CLOSET, SEE PLUMB.

07 WALL-MOUNTED URINAL, SEE PLUMB.

08 36" GRAB BAR, CONTRACTOR PROVIDED / CONTRACTOR INSTALLED.

09 42" GRAB BAR, CONTRACTOR PROVIDED / CONTRACTOR INSTALLED.

10 TOILET PAPER DISPENSER (ONE PER TOILET), OWNER PROVIDED / CONTRACTOR INSTALLED.

11 FEMININE PRODUCT DISPOSAL (ONE PER FEMALE TOILET STALL AND FAMILY RESTROOM), CONTRACTOR PROVIDED / CONTRACTOR INSTALLED.

12 TOILET PARTITION, SOLID POLYMER. EACH STALL DOOR SHALL HAVE 2 HOOKS. PROVIDE FIN. BLOCKING BEHIND WALL BRACKETS ABOVE TILE WAINSCOT, CONT., TYP..

13 WALL-MOUNTED URINAL SCREEN, TYP.

14 FOLD-DOWN DIAPER CHANGING STATION, CONTRACTOR PROVIDED / CONTRACTOR INSTALLED. PROVIDE ALL IN-WALL BLOCKING NEEDED. INSTALL 28" A.F.F.

15 CHILD PROTECTION SEAT, CONTRACTOR PROVIDED / CONTRACTOR INSTALLED. INSTALL 15" A.F.F.

16 WALL-MOUNTED LAVATORY, SEE PLUMB.

17 FLR-MOUNTED WATER CLOSET, SEE PLUMB.

18 FLR-MOUNTED CHILD-SIZED WATER CLOSET, SEE PLUMB.

19 COAT HOOKS, CONTRACTOR PROVIDED / CONTRACTOR INSTALLED. INSTALL 44" A.F.F.

20 ELECTRIC HAND DRYER, CONTRACTOR PROVIDED / CONTRACTOR INSTALLED, TYP.

21 3"x3"x1/4" STL. ANGLE SUPPORT, PNT., TYP., COORD. W/ TRASH CHUTE.

GENERAL NOTES: APPLY TO THIS SHEET ONLY

1. PROVIDE ALL BLKNG. NECESSARY TO INSTALL ALL TOILET ACCESSORIES, COUNTERS, FIXTURES, ETC.

apacedesign
architects
engineers
planners
2112 Fisher
Peoria, Illinois 61614
Phone 309.688.8100
Fax 309.688.4784
www.apacedesign.com

Restroom Elevations & Details

Peoria PlayHouse Children's Museum
Peoria Park District
Glen Oak Park Pavillion
Peoria, IL 61603

NO.	ISSUE	DATE
1	Bidding Documents	3.19.14

DATE 3.19.14	PROJECT NO. 24905.02
DRAWN BY BLK / KRM	SHEET
CHECKED BLK	A601
APPROVED SJM	24 OF 24

CODE

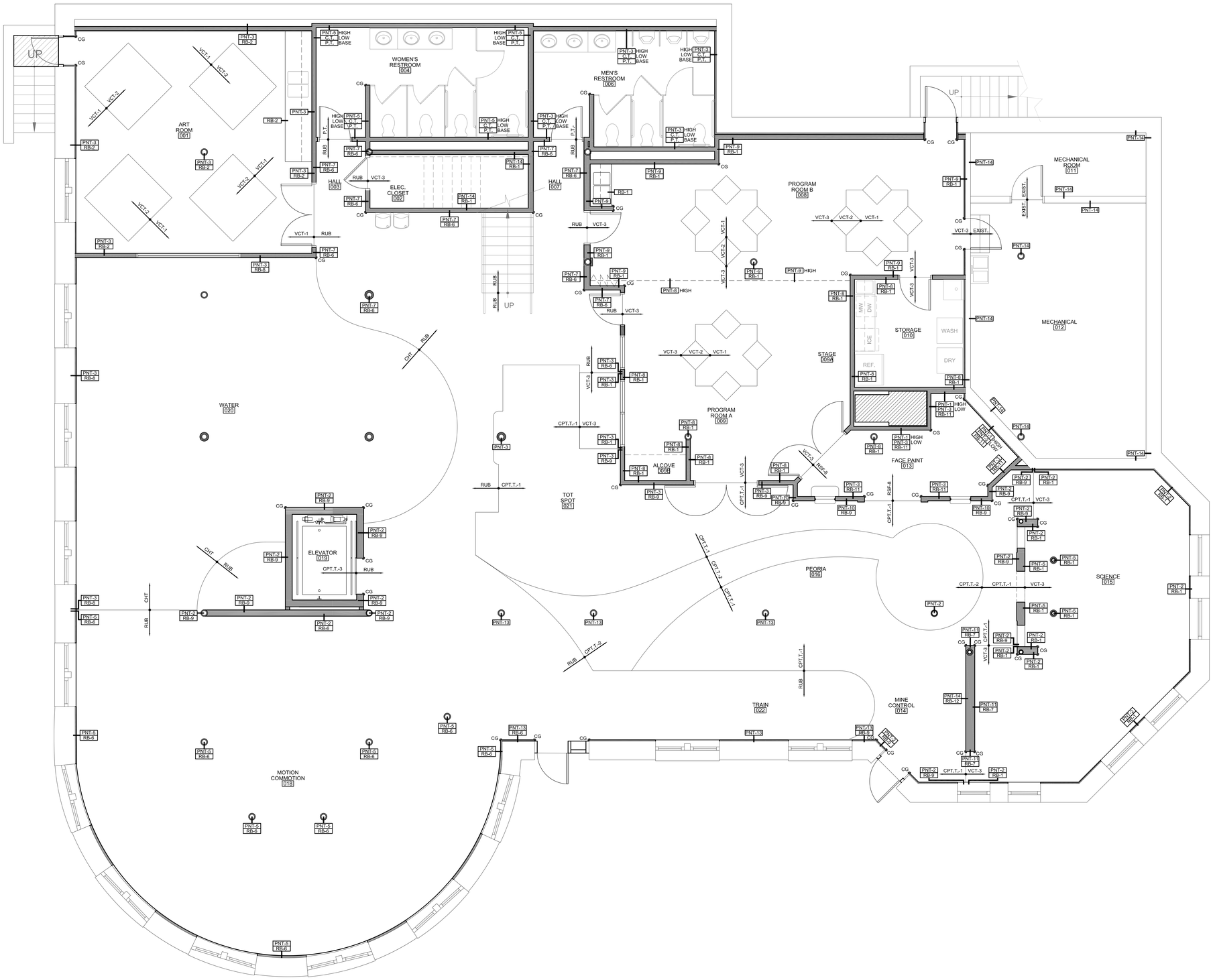

1 IF100 REVISED LEVEL 1 INTERIOR FINISHES PLAN
SCALE: 1/4" = 1'-0"

PLAN NORTH

0 2 4 8 16
scale in feet

LEGEND: APPLIES TO IF SHEETS ONLY

XX-# / XX-# = FLOORING DESIGNATION; SEE ROOM FIN. SCHEDULE

XX-# / XX-# = WALL FINISH AND BASE DESIGNATION; SEE ROOM FIN. SCHEDULE

FINISH ABBREVIATIONS

CG	=	CORNER GUARD
CHT	=	CHANNEL TILE
CONC.	=	CONCRETE
CPT.T.	=	CARPET TILE
C.T.	=	CERAMIC TILE
EXIST.	=	EXISTING
PNT.	=	PAINT
P.T.	=	PORCELAIN TILE
RB	=	RESILIENT BASE
RSF	=	RESILIENT SHEET FLOORING
R.T.	=	RUBBER TILE
RUB	=	RUBBER FLOORING
VCT	=	VINYL COMPOSITION TILE

REVISED GENERAL NOTES: (APPLY TO THIS SHEET ONLY)

1. ALL HOLES, BULGES, AND CRACKS IN EXIST. PLASTER WALLS TO BE PATCHED WITH NEW CONSTR. TO MATCH ADJACENT.
2. ALL EXIST. AND NEW EXPOSED STRUCTURE, DUCTS, PIPING, ETC. SHALL BE PAINTED.
3. CONTRACTOR SHALL PROVIDE LATEXING AS NECESSARY TO ACCOMMODATE NEW FLOOR FINISHES, COORD. W/ SCHED.
4. 1/4" PLYWOOD UNDERLAYMENT SHALL BE PROVIDED AND INSTALLED AT ALL EXIST. WD. SUBFLOORS TO PROVIDE A SMOOTH SUBSTRATE FOR FIN. FLRNG., COORD. W/ SCHED.
5. ALL EXIST. WD. WINDOW FRAMES, SASHES, MUNTINS, SILLS, TRIM, ETC. SHALL BE PAINTED WHITE (PNT-14).

apacedesign
architects
engineers
planners
2112 Fairview
Peoria, Illinois 61604
Phone 309.676.8100
Fax 309.676.4784
www.apacedesign.com

Revised Level 1 Interior Finishes Plan

Peoria PlayHouse Children's Museum
Peoria Park District
Glen Oak Park Pavillion
Peoria, IL 61603

NO.	ISSUE	DATE
1	Bidding Documents	3.19.14

DATE 3.19.14	PROJECT NO. 24905.02
DRAWN BY KRM	SHEET
CHECKED BLK	IF100
APPROVED SJM	1 OF 3

CORE

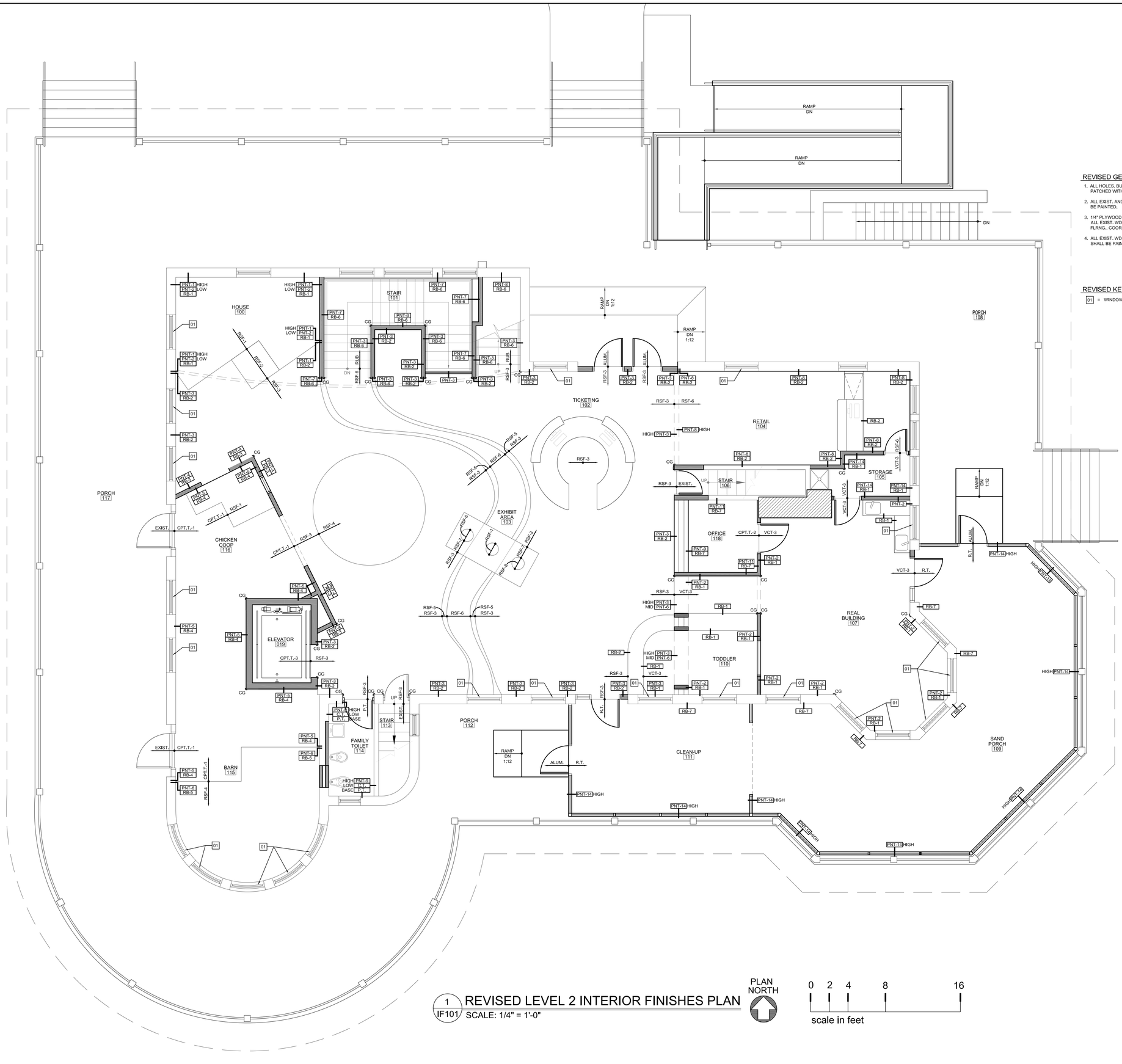

1 IF101 REVISED LEVEL 2 INTERIOR FINISHES PLAN
SCALE: 1/4" = 1'-0"

PLAN NORTH

0 2 4 8 16
scale in feet

LEGEND: APPLIES TO IF SHEETS ONLY

XX-# / XX-# = FLOORING DESIGNATION: SEE ROOM FIN. SCHEDULE

XX-# / XX-# = WALL FINISH AND BASE DESIGNATION: SEE ROOM FIN. SCHEDULE

FINISH ABBREVIATIONS

CG	=	CORNER GUARD
CHT	=	CHANNEL TILE
CONC.	=	CONCRETE
CPT.T.	=	CARPET TILE
C.T.	=	CERAMIC TILE
EXIST.	=	EXISTING
PNT.	=	PAINT
P.T.	=	PORCELAIN TILE
RB	=	RESILIENT BASE
RSF	=	RESILIENT SHEET FLOORING
R.T.	=	RUBBER TILE
RUB	=	RUBBER FLOORING
VCT	=	VINYL COMPOSITION TILE

REVISED GENERAL NOTES: (APPLY TO THIS SHEET ONLY)

1. ALL HOLES, BULGES, AND CRACKS IN EXIST. PLASTER WALLS TO BE PATCHED WITH NEW CONSTR. TO MATCH ADJACENT.
2. ALL EXIST. AND NEW EXPOSED STRUCTURE, DUCTS, PIPING, ETC. SHALL BE PAINTED.
3. 1/4" PLYWOOD UNDERLAYMENT SHALL BE PROVIDED AND INSTALLED AT ALL EXIST. WD. SUBFLOORS TO PROVIDE A SMOOTH SUBSTRATE FOR FIN. FLRNG., COORD. W/ SCHED.
4. ALL EXIST. WD. WINDOW FRAMES, SASHES, MUNTINS, SILLS, TRIM, ETC. SHALL BE PAINTED WHITE (PNT-14).

REVISED KEYED NOTES: (APPLY TO THIS SHEET ONLY)

01 = WINDOW GUARD; SEE DETAIL 15/A500.

apacedesign
architects engineers planners
25 NE Perry
25 NE Perry, Macomb Drive
Peoria, IL 61603
Phone 309.676.1134
Fax 309.676.1135
www.apacedesign.com

Revised Level 2 Interior Finishes Plan

Peoria PlayHouse Children's Museum
Peoria Park District
Glen Oak Park Pavillion
Peoria, IL 61603

NO.	ISSUE	DATE
1	Bidding Documents	3.19.14

DATE 3.19.14	PROJECT NO. 24905.02
DRAWN BY KRM	SHEET
CHECKED BLK	IF101
APPROVED SJM	2 OF 3

CODE

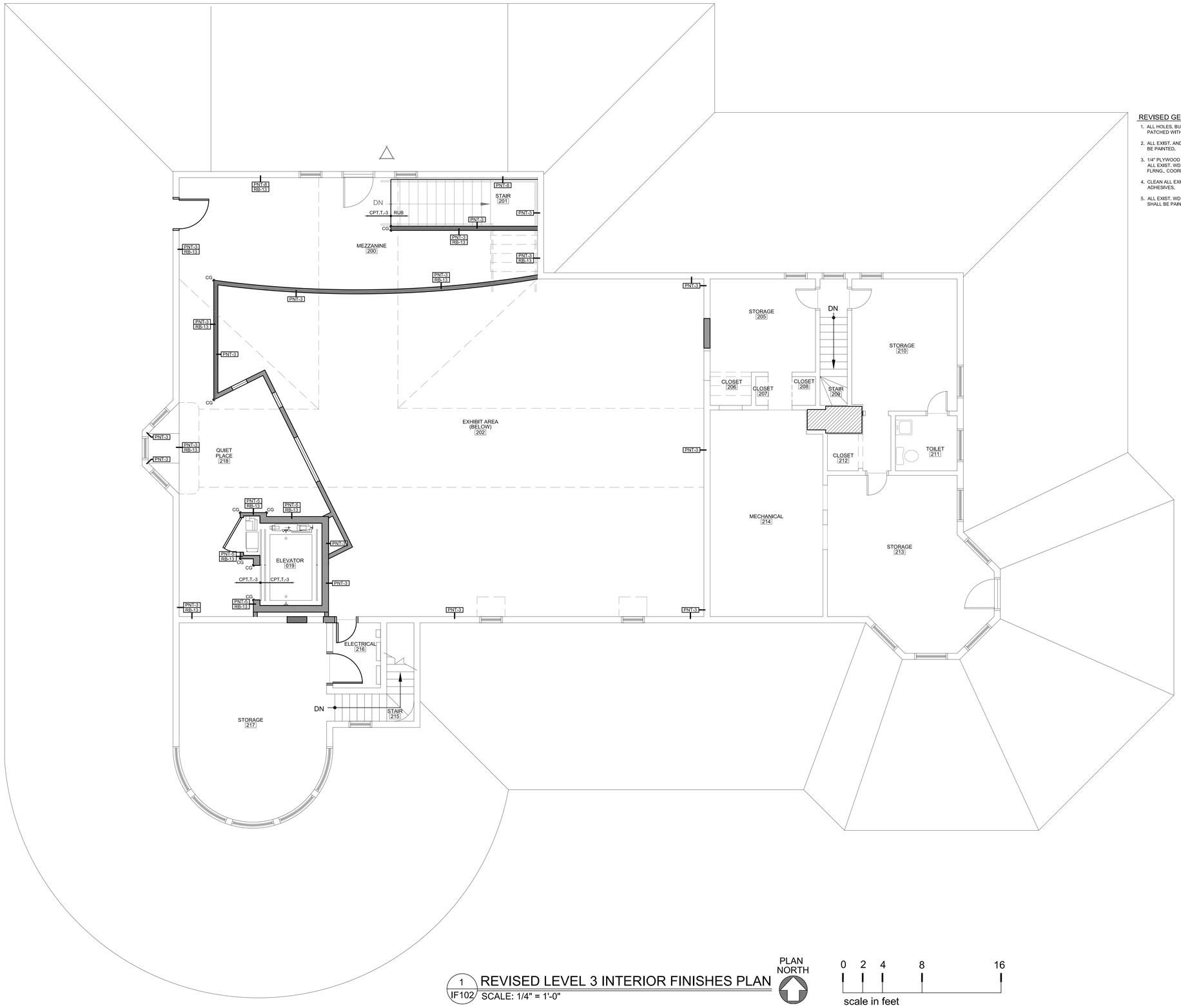

1 IF102 REVISED LEVEL 3 INTERIOR FINISHES PLAN
SCALE: 1/4" = 1'-0"

PLAN NORTH

0 2 4 8 16
scale in feet

LEGEND: APPLIES TO IF SHEETS ONLY

XX-# XX-# = FLOORING DESIGNATION; SEE ROOM FIN. SCHEDULE

XX-# / XX-# = WALL FINISH AND BASE DESIGNATION; SEE ROOM FIN. SCHEDULE

FINISH ABBREVIATIONS

CG	=	CORNER GUARD
CHT	=	CHANNEL TILE
CONC.	=	CONCRETE
CPT.T.	=	CARPET TILE
C.T.	=	CERAMIC TILE
EXIST.	=	EXISTING
PNT.	=	PAINT
P.T.	=	PORCELAIN TILE
RB	=	RESILIENT BASE
RSF	=	RESILIENT SHEET FLOORING
R.T.	=	RUBBER TILE
RUB	=	RUBBER FLOORING
VCT	=	VINYL COMPOSITION TILE

REVISED GENERAL NOTES: (APPLY TO THIS SHEET ONLY)

1. ALL HOLES, BULGES, AND CRACKS IN EXIST. PLASTER WALLS TO BE PATCHED WITH NEW CONSTR. TO MATCH ADJACENT.
2. ALL EXIST. AND NEW EXPOSED STRUCTURE, DUCTS, PIPING, ETC. SHALL BE PAINTED.
3. 1/4" PLYWOOD UNDERLAYMENT SHALL BE PROVIDED AND INSTALLED AT ALL EXIST. WD. SUBFLOORS TO PROVIDE A SMOOTH SUBSTRATE FOR FIN. FLRNG., COORD. W/ SCHED.
4. CLEAN ALL EXIST. WINDOW GLAZING OF ANY RESIDUAL PAINT OR ADHESIVES.
5. ALL EXIST. WD. WINDOW FRAMES, SASHES, MUNTINS, SILLS, TRIM, ETC. SHALL BE PAINTED WHITE (PNT-14).

apacedesign
architects
planners
engineers
2115 Fairview Memorial Drive
Peoria, Illinois 61614
(309) 685-4212 (309) 685-4784
www.apacedesign.com

Revised Level 3 Interior Finishes Plan

Peoria PlayHouse Children's Museum
Peoria Park District
Glen Oak Park Pavillion
Peoria, IL 61603

NO.	ISSUE	DATE
1	Bidding Documents	3.19.14

DATE 3.19.14	PROJECT NO. 24905.02
DRAWN BY KRM	SHEET
CHECKED BLK	IF102
APPROVED SJM	3 OF 3

CODE

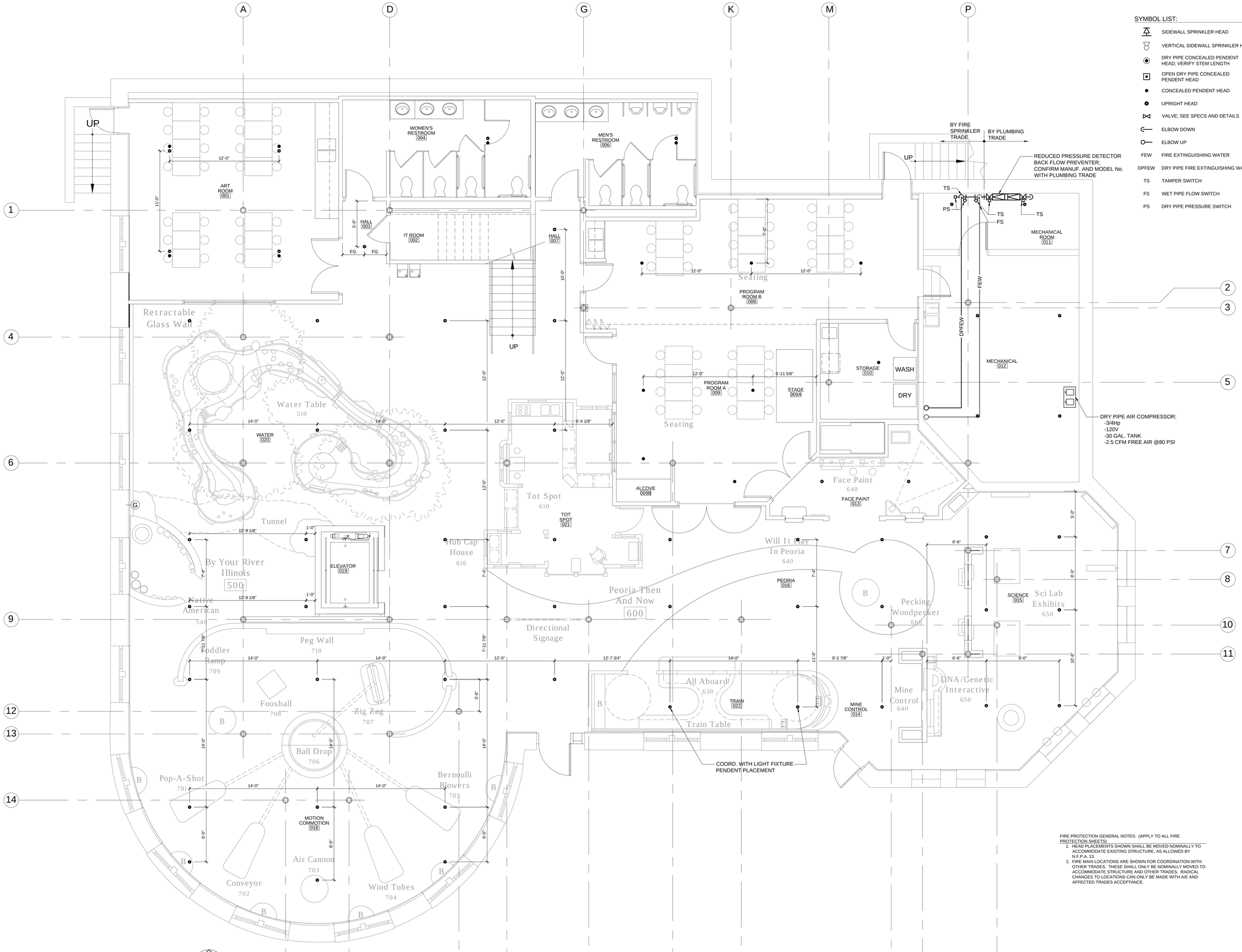

SYMBOL LIST:

- SIDEWALL SPRINKLER HEAD
- VERTICAL SIDEWALL SPRINKLER HEAD
- DRY PIPE CONCEALED PENDENT HEAD; VERIFY STEM LENGTH
- OPEN DRY PIPE CONCEALED PENDENT HEAD
- CONCEALED PENDENT HEAD
- UPRIGHT HEAD
- VALVE; SEE SPECS AND DETAILS
- ELBOW DOWN
- ELBOW UP
- FEW FIRE EXTINGUISHING WATER
- DPFEW DRY PIPE FIRE EXTINGUISHING WATER
- TS TAMPER SWITCH
- FS WET PIPE FLOW SWITCH
- PS DRY PIPE PRESSURE SWITCH

FIRE PROTECTION GENERAL NOTES: (APPLY TO ALL FIRE PROTECTION SHEETS)

1. HEAD PLACEMENTS SHOWN SHALL BE MOVED NOMINALLY TO ACCOMMODATE EXISTING STRUCTURE, AS ALLOWED BY N.F.P.A. 13.
2. FIRE MAIN LOCATIONS ARE SHOWN FOR COORDINATION WITH OTHER TRADES. THESE SHALL ONLY BE NOMINALLY MOVED TO ACCOMMODATE STRUCTURE AND OTHER TRADES. RADICAL CHANGES TO LOCATIONS CAN ONLY BE MADE WITH A/E AND AFFECTED TRADES ACCEPTANCE.

1 FIRE SPRINKLER LEVEL 1 PLAN
FP100 SCALE: 1/4" = 1'-0"

0 2 4 8 16
scale in feet

apaceDesign
architects
engineers
designers
apaceDesign
2112 East Wise Memorial Drive
Peoria Illinois 61614
t 309.655.4722 f 309.655.4784
www.apaceDesign.com

Fire Sprinkler Level 1

Peoria PlayHouse Renovation
Peoria Park District
Glen Oak Park Pavillion
Peoria, Illinois 61603

NO.	ISSUE	DATE
1	Bidding Documents	03.19.14

EXPIRES 11.30.15
MARK A. COERTS
062-039301
LICENSED PROFESSIONAL ENGINEER OF ILLINOIS

DATE 03.19.14	PROJECT NO. 24905.02
DRAWN BY BAW	SHEET
CHECKED MAC	FP100
APPROVED MAC	1 OF 5

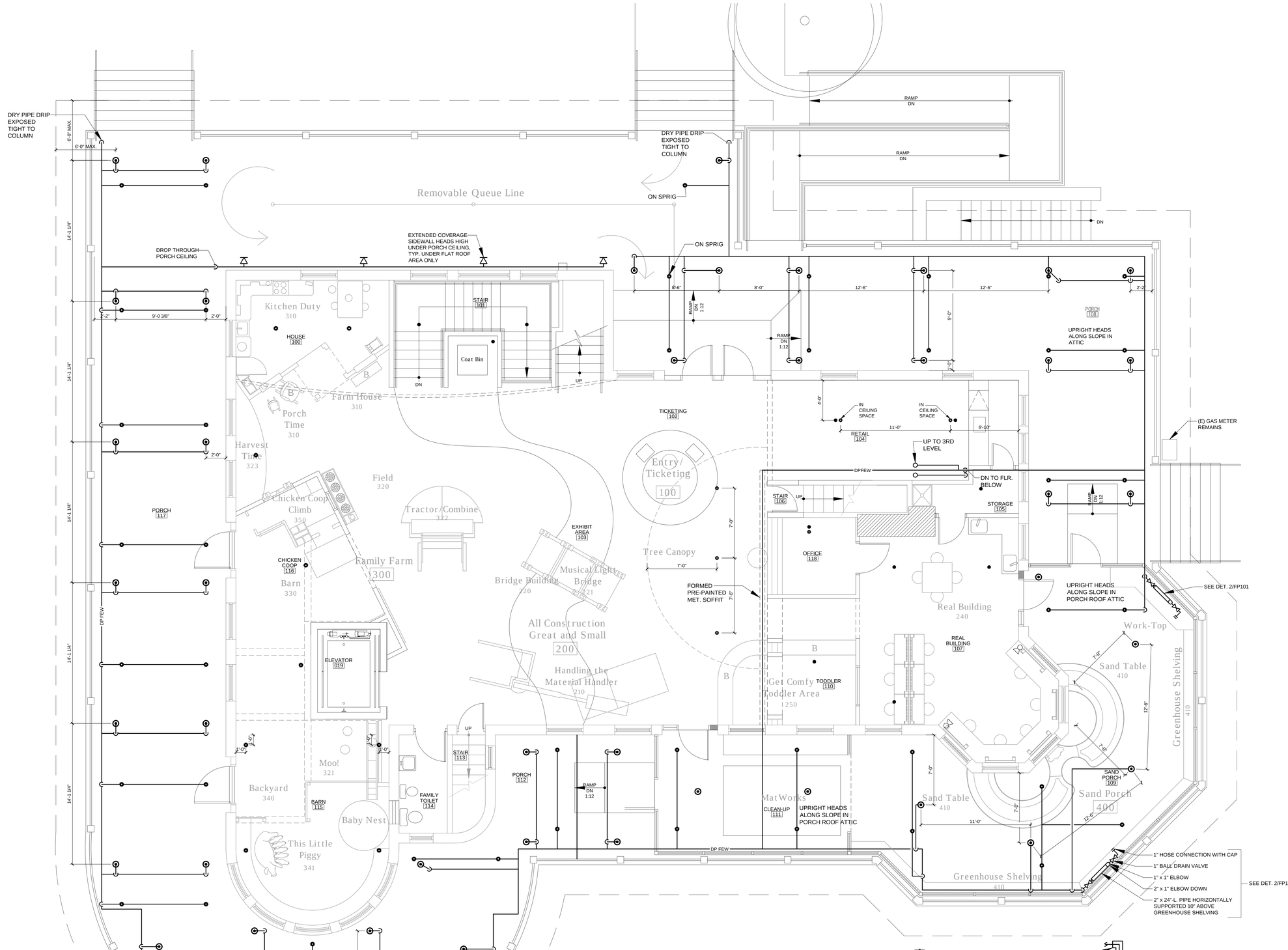

1 FP101 Fire Sprinkler Level 2
SCALE: 1/4" = 1'-0"

0 2 4 8 16
scale in feet

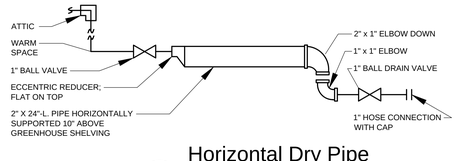

2 FP101 Horizontal Dry Pipe System Aux. Drain
N.T.S.

PRELIMINARY DOCUMENTS
NOT FOR CONSTRUCTION

SYMBOL LIST:

- SIDEWALL SPRINKLER HEAD
- VERTICAL SIDEWALL SPRINKLER HEAD
- DRY PIPE CONCEALED PENDENT HEAD; VERIFY STEM LENGTH
- OPEN DRY PIPE CONCEALED PENDENT HEAD
- CONCEALED PENDENT HEAD
- UPRIGHT HEAD
- VALVE; SEE SPECS AND DETAILS
- ELBOW DOWN
- ELBOW UP
- FEW FIRE EXTINGUISHING WATER
- DPFEW DRY PIPE FIRE EXTINGUISHING WATER
- TS TAMPER SWITCH
- FS WET PIPE FLOW SWITCH
- PS DRY PIPE PRESSURE SWITCH

apaceDesign
2112 East Wier Memorial Drive
Peoria Illinois 61614
t 309.685.4722 f 309.685.4784
www.apaceDesign.com
architects
engineers
designers

Fire Sprinkler Level 2

Peoria PlayHouse Renovation
Peoria Park District
Glen Oak Park Pavillion
Peoria, Illinois 61603

NO.	ISSUE	DATE
1	Bidding Documents	03.19.14

EXPIRES 11.30.15
062-039301
LICENSED PROFESSIONAL ENGINEER OF ILLINOIS

DATE 03.19.14	PROJECT NO. 24905.02
DRAWN BY BAW	SHEET
CHECKED MAC	FP101
APPROVED MAC	2 OF 5

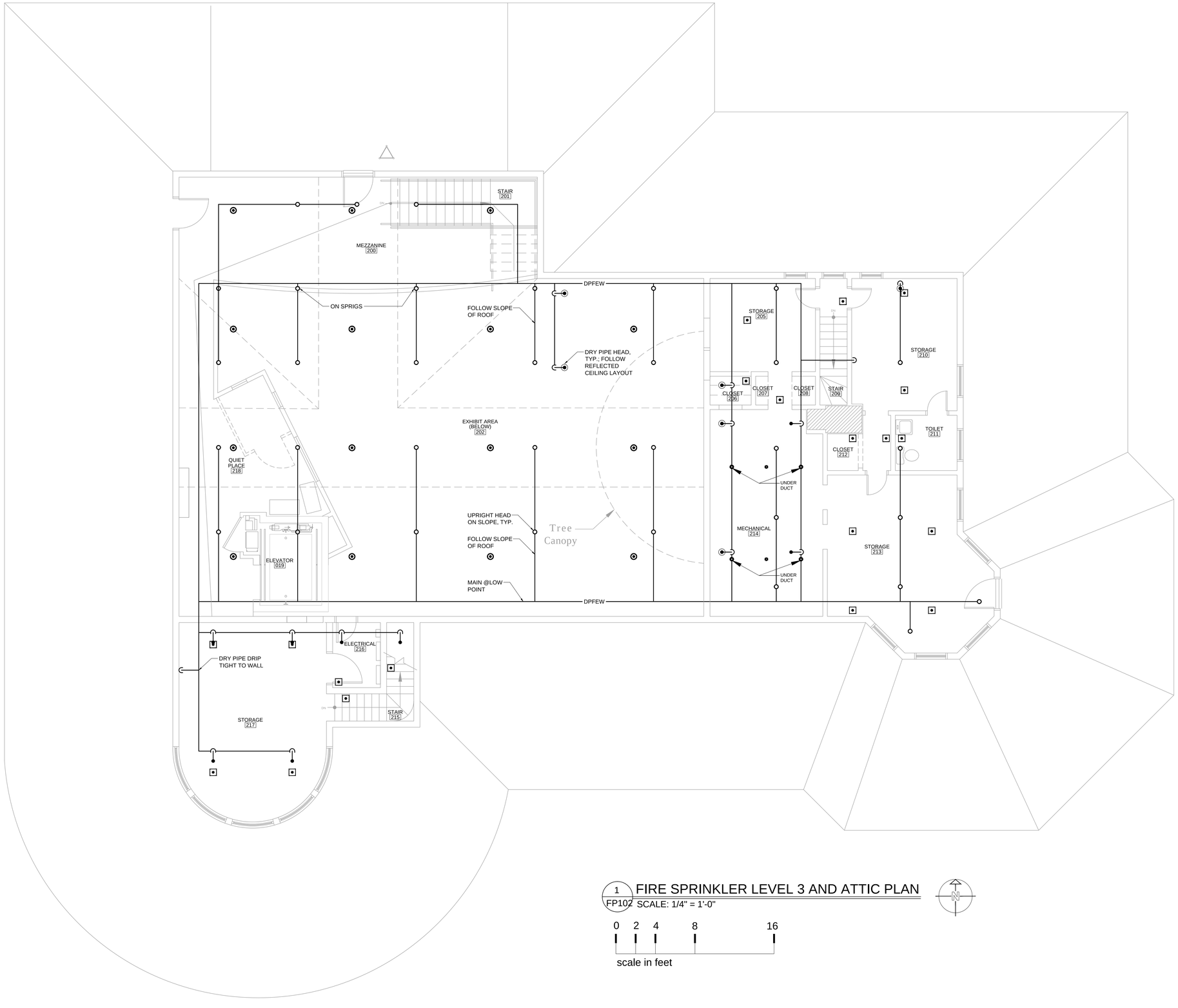

1 FIRE SPRINKLER LEVEL 3 AND ATTIC PLAN
FP102 SCALE: 1/4" = 1'-0"

0 2 4 8 16
scale in feet

N

apaceDesign

FIRE SPRINKLER LEVEL 3 AND ATTIC PLAN

Peoria PlayHouse Renovation
Peoria Park District
Glen Oak Park Pavillion
Peoria, Illinois 61603

NO.	ISSUE	DATE
1	Bidding Documents	03.19.14

EXPIRES 11.30.15
062-039301
LICENSED PROFESSIONAL ENGINEER OF ILLINOIS

DATE 03.19.14	PROJECT NO. 24905.02
DRAWN BY BAW	SHEET
CHECKED MAC	FP102
APPROVED MAC	3 OF 5

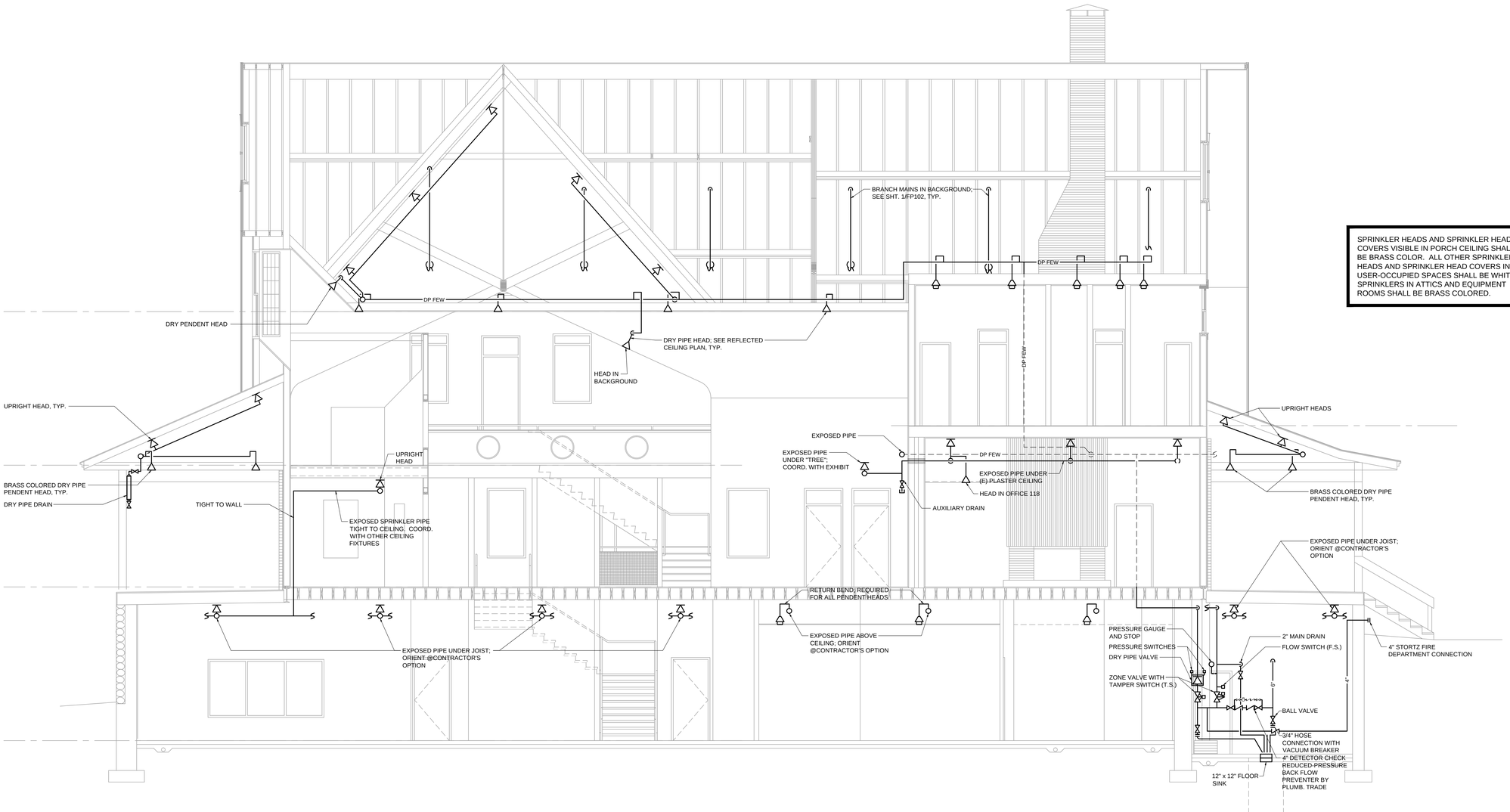

SPRINKLER HEADS AND SPRINKLER HEAD COVERS VISIBLE IN PORCH CEILING SHALL BE BRASS COLOR. ALL OTHER SPRINKLER HEADS AND SPRINKLER HEAD COVERS IN USER-OCCUPIED SPACES SHALL BE WHITE. SPRINKLERS IN ATTICS AND EQUIPMENT ROOMS SHALL BE BRASS COLORED.

1 FP200 BUILDING SECTION
SCALE: 1/4" = 1'-0"

0 2 4 8 16
scale in feet

apacedesign
architects
engineers
designers
www.apacedesign.com
2112 E War Memorial Drive
Peoria, Illinois 61614
1.309.688.4772 / F.309.688.4784
www.apacedesign.com

Existing/Revised Building Section

Peoria PlayHouse Renovation
Peoria Park District
Glen Oak Park Pavillion
Peoria, Illinois 61603

NO.	ISSUE	DATE
1	Bidding Documents	03.19.14

EXPIRES 11.30.15
062-039301
LICENSED PROFESSIONAL ENGINEER
PROFESSIONAL ENGINEER

DATE 03.19.14	PROJECT NO. 24905.02
DRAWN BY BAW	SHEET
CHECKED MAC	FP200
APPROVED MAC	4 OF 5

GENERAL NOTES:

1. FIRE SPRINKLER SUBCONTRACTOR SHALL DESIGN SYSTEMS SHOWN IN ACCORDANCE WITH NFPA 13 AS INTERPRETED BY THE FIRE DEPARTMENT OF THE CITY OF PEORIA.
2. CERTAIN ELEMENTS OF THIS DESIGN SHALL ADHERE TO WHAT IS SHOWN ON SHEETS FP100-TO-FP201, AS WELL AS SHEETS A400-TO-A402. THESE INCLUDE BUT ARE NOT LIMITED TO:
   a. ROUTING OF WET AND DRY PIPE MAINS WHERE EXPOSED TO OCCUPIED SPACE OR ENCLOSED IN CONCEALING CHASES OR SOFFITS.
   b. LOCATION OF SPRINKLER HEADS AS THE COORDINATE WITH CEILING LAYOUTS.
   c. USE OF RETURN BENDS FOR INSTALLATION OF WET PENDENT HEADS.
   d. ROUTING OF MAINS, BRANCH MAINS, HEADS AND CONCEALED HEADS EXPOSED IN OCCUPIED SPACES AND VISIBLE FROM A SINGLE LOCATION SHALL ALIGN, EXCEPT AS NOTED OR ALLOWED BY THE A/E AND OWNER.

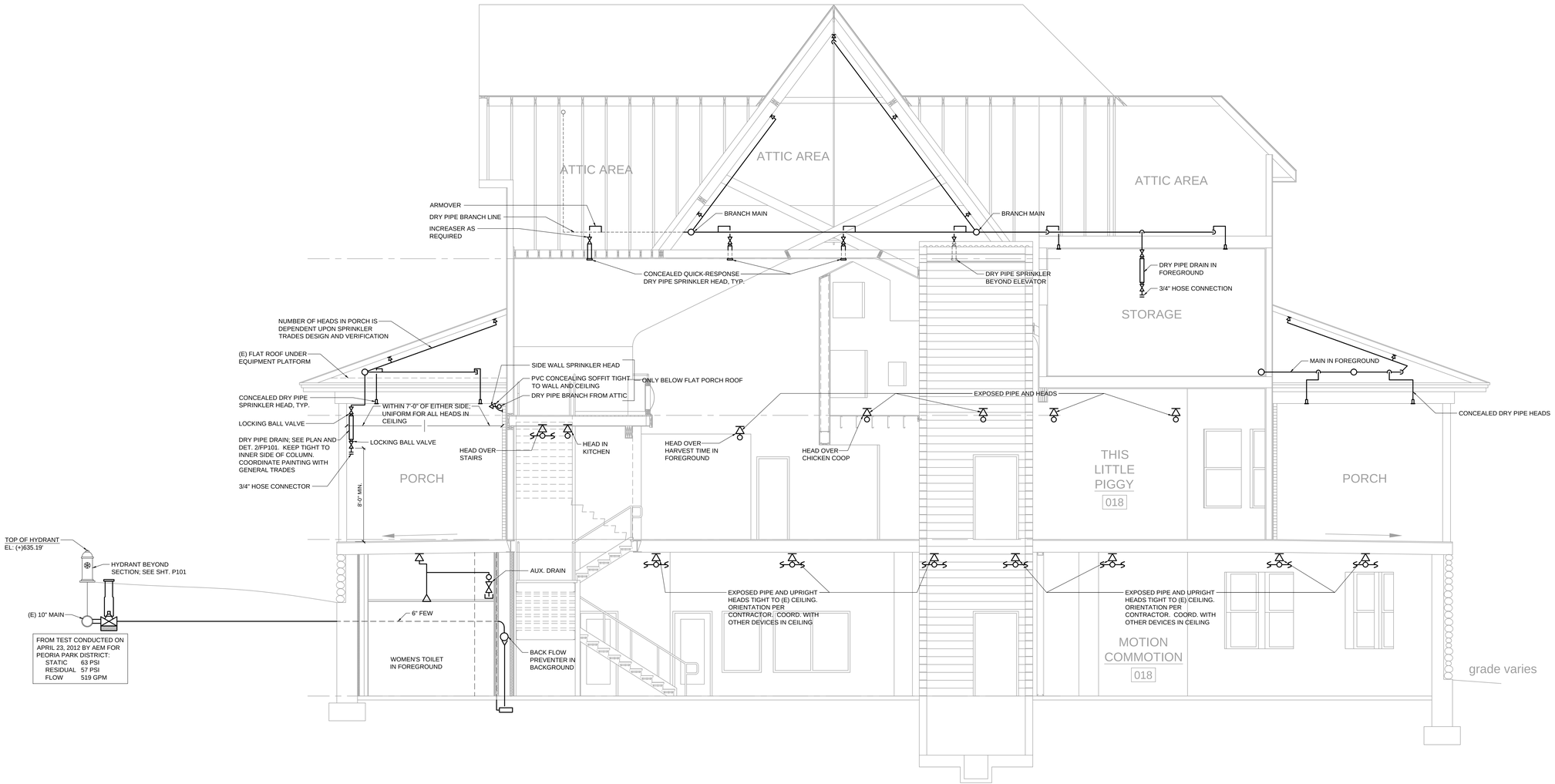

1 FP201 BUILDING SECTION
SCALE: 1/4" = 1'-0"

0 2 4 8 16
scale in feet

PRELIMINARY DOCUMENTS
NOT FOR CONSTRUCTION

apaceDesign
2113 East Vine Memorial Drive
Peoria Illinois 61614
t 309.685.4722 f 309.685.4784
www.apaceDesign.com

Existing/Revised Building Section

Peoria PlayHouse Renovation
Peoria Park District
Glen Oak Park Pavillion
Peoria, Illinois 61603

NO.	ISSUE	DATE
1	Bidding Documents	03.19.14

EXPIRES 11.30.15
MARK A. CORDES
062-039301
LICENSED PROFESSIONAL ENGINEER
OF ILLINOIS

DATE 03.19.14	PROJECT NO. 24905.02
DRAWN BY BAW	SHEET
CHECKED MAC	FP201
APPROVED MAC	5 OF 5

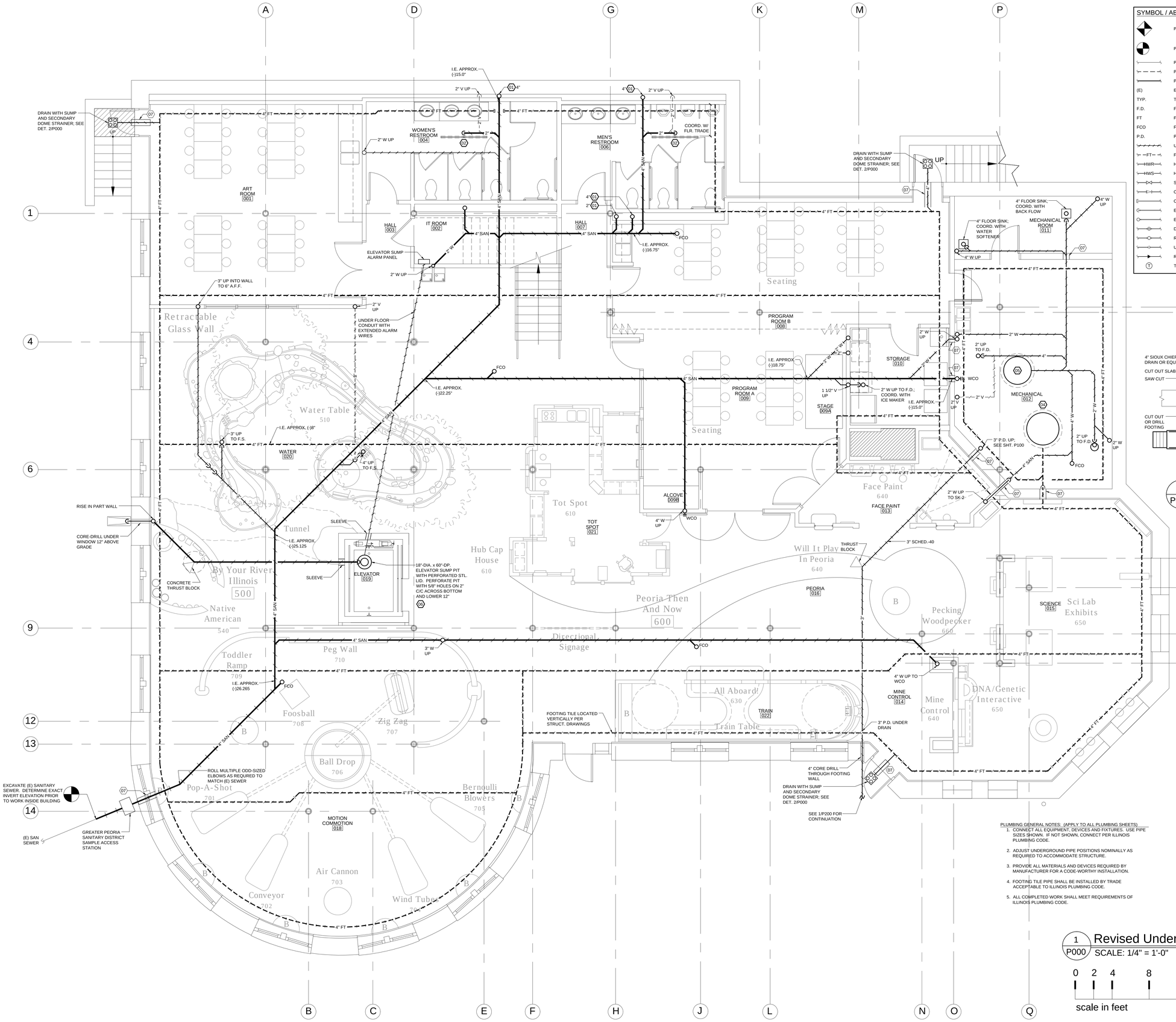

1 P000 Revised Under Floor Level 1 Plumbing Plan
SCALE: 1/4" = 1'-0"

0 2 4 8 16
scale in feet

SYMBOL / ABBREVIATION LIST:

	POINT OF DISCONNECTION
	POINT OF NEW CONNECTION
	PIPE TO REMAIN
	PIPE TO BE REMOVED
	PIPE TO BE INSTALLED
(E)	EXISTING
TYP.	TYPICAL
F.D.	FLOOR DRAIN
FT	FINTUBE CABINET
FCO	FLOOR CLEAN-OUT
P.D.	PUMPED DISCHARGE
	UNDER FLOOR PIPE
FT	FOOTING TILE
HWR	HOT WATER RETURN
HWS	HOT WATER SUPPLY
	STOP-VALVE; SEE SPEC.
	CHECK-VALVE IN PLAN
	CAP
	ELBOW TURNED DOWN
	ELBOW TURNED UP
	DROP FROM BOTTOM
	RISE FROM TOP
	UNION
	REDUCER / INCREASER
T	THERMOSTAT

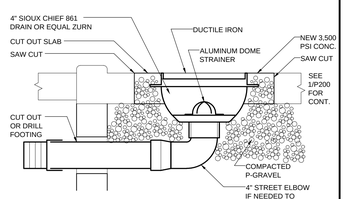

2 P000 DRAIN AND SUMP DET.
SCALE: 1 1/2" = 1'-0"

PLUMBING KEYED NOTES THIS SHEET: (APPLY TO ALL SIMILAR SITUATIONS ON ALL SHEETS)

01. WASTE UP; SIZE PER ADJACENT NOTE.
02. 2 1/2"-W. x 60"-L. STAINLESS STEEL TRENCH DRAIN EQUAL TO ZURN ZS880 WITH HEEL-PROOF TOP; SEE 1/P200.
03. ADJUST POSITION AS REQUIRED TO AVOID EXISTING STRUCTURE.
04. 36"-DIA. x 72"-DP. SUMP PUMP BASIN; 42"-DIA. STEEL LID. (2) PUMPS EACH RATED FOR 70-GPM @25' HEAD; 2" DISCHARGE; 1.0Hp; 208V/1 ϕ WITH DUPLEX PUMP CONTROLLER AND ALARM. BASED ON WEIL 1413.
05. SANITARY EJECTOR PUMP; 36"-DIA. x 48"-DP. PIT; 36"-DIA. STEEL LID. (2) PUMPS RATED FOR 130-GPM @20' HEAD; 208V; 1 1/2Hp. BASED ON WEIL 2426. PROVIDE DUPLEX CONTROL AND ALARM.
06. SIMPLEX ELEVATOR PUMP; 50-GPM; 20' HEAD; 120V; 3/4Hp. BASED ON WEIL 1422. PROVIDE WITH ALARM; SEE NOTE ON PLAN.
07. CORE DRILL WALL.

PLUMBING GENERAL NOTES: (APPLY TO ALL PLUMBING SHEETS)

1. CONNECT ALL EQUIPMENT, DEVICES AND FIXTURES. USE PIPE SIZES SHOWN. IF NOT SHOWN, CONNECT PER ILLINOIS PLUMBING CODE.
2. ADJUST UNDERGROUND PIPE POSITIONS NOMINALLY AS REQUIRED TO ACCOMMODATE STRUCTURE.
3. PROVIDE ALL MATERIALS AND DEVICES REQUIRED BY MANUFACTURER FOR A CODE-WORTHY INSTALLATION.
4. FOOTING TILE PIPE SHALL BE INSTALLED BY TRADE ACCEPTABLE TO ILLINOIS PLUMBING CODE.
5. ALL COMPLETED WORK SHALL MEET REQUIREMENTS OF ILLINOIS PLUMBING CODE.

apacedesign
architects engineers designers
www/office/
2111 East War Memorial Drive
Peoria, Illinois 61614
t:309.685.4721 f:309.685.4784
www.apacedesign.com

Revised Under Floor Level 1 Plumbing Plan

Peoria PlayHouse Renovation
Peoria Park District
Glen Oak Park Pavillion
Peoria, Illinois 61603

NO.	ISSUE	DATE
1	Bidding Documents	03.19.14

EXPIRES 11.30.15
062-039301
LICENSED PROFESSIONAL ENGINEER OF ILLINOIS

DATE 03.19.14	PROJECT NO. 24905.02
DRAWN BY BAW	SHEET
CHECKED MAC	P000
APPROVED MAC	1 OF 8

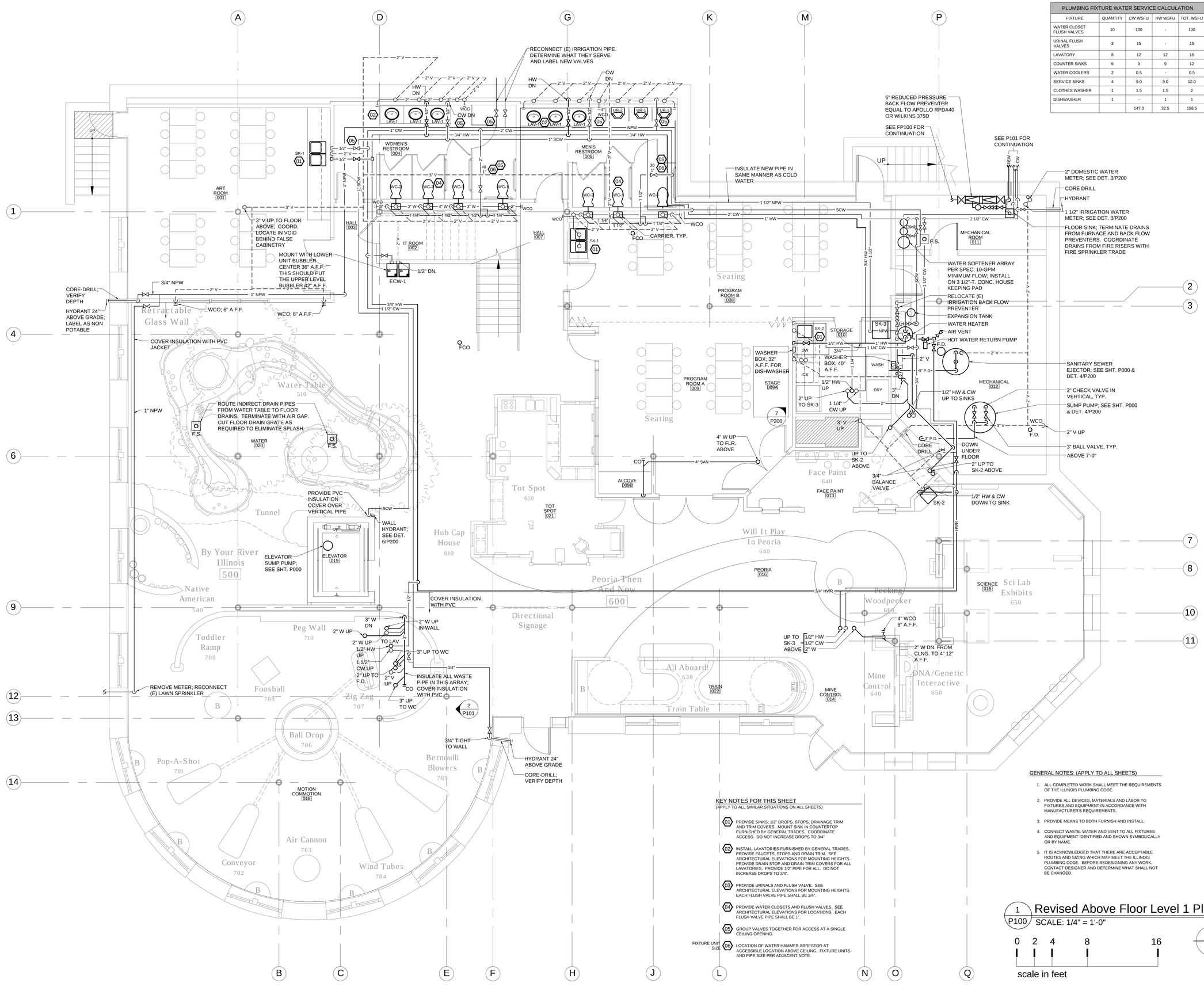

PLUMBING FIXTURE WATER SERVICE CALCULATION				
FIXTURE	QUANTITY	CW WSFU	HW WSFU	TOT. WSFU
WATER CLOSET FLUSH VALVES	10	100	-	100
URINAL FLUSH VALVES	3	15	-	15
LAVATORY	8	12	12	16
COUNTER SINKS	6	9	9	12
WATER COOLERS	2	0.5	-	0.5
SERVICE SINKS	4	9.0	9.0	12.0
CLOTHES WASHER	1	1.5	1.5	2
DISHWASHER	1	-	1	1
		147.0	32.5	158.5

KEY NOTES FOR THIS SHEET

(APPLY TO ALL SIMILAR SITUATIONS ON ALL SHEETS)

01. PROVIDE SINKS, 1/2" DROPS, STOPS, DRAINAGE TRIM AND TRIM COVERS. MOUNT SINK IN COUNTERTOP FURNISHED BY GENERAL TRADES. COORDINATE ACCESS. DO NOT INCREASE DROPS TO 3/4"
02. INSTALL LAVATORIES FURNISHED BY GENERAL TRADES. PROVIDE FAUCETS, STOPS AND DRAIN TRIM. SEE ARCHITECTURAL ELEVATIONS FOR MOUNTING HEIGHTS. PROVIDE DRAIN STOP AND DRAIN TRIM COVERS FOR ALL LAVATORIES. PROVIDE 1/2" PIPE FOR ALL. DO NOT INCREASE DROPS TO 3/4".
03. PROVIDE URINALS AND FLUSH VALVE. SEE ARCHITECTURAL ELEVATIONS FOR MOUNTING HEIGHTS. EACH FLUSH VALVE PIPE SHALL BE 3/4".
04. PROVIDE WATER CLOSETS AND FLUSH VALVES. SEE ARCHITECTURAL ELEVATIONS FOR LOCATIONS. EACH FLUSH VALVE PIPE SHALL BE 1".
05. GROUP VALVES TOGETHER FOR ACCESS AT A SINGLE CEILING OPENING.
06. LOCATION OF WATER HAMMER ARRESTOR AT ACCESSIBLE LOCATION ABOVE CEILING. FIXTURE UNITS AND PIPE SIZE PER ADJACENT NOTE.

FIXTURE UNIT SIZE

GENERAL NOTES: (APPLY TO ALL SHEETS)

1. ALL COMPLETED WORK SHALL MEET THE REQUIREMENTS OF THE ILLINOIS PLUMBING CODE.
2. PROVIDE ALL DEVICES, MATERIALS AND LABOR TO FIXTURES AND EQUIPMENT IN ACCORDANCE WITH MANUFACTURER'S REQUIREMENTS.
3. PROVIDE MEANS TO BOTH FURNISH AND INSTALL.
4. CONNECT WASTE, WATER AND VENT TO ALL FIXTURES AND EQUIPMENT IDENTIFIED AND SHOWN SYMBOLICALLY OR BY NAME.
5. IT IS ACKNOWLEDGED THAT THERE ARE ACCEPTABLE ROUTES AND SIZING WHICH MAY MEET THE ILLINOIS PLUMBING CODE. BEFORE REDESIGNING ANY WORK, CONTACT DESIGNER AND DETERMINE WHAT SHALL NOT BE CHANGED.

1 / P100 Revised Above Floor Level 1 Plumbing Plan

SCALE: 1/4" = 1'-0"

0 2 4 8 16

scale in feet

apace design
architects / planners / designers
2112 East Nev Memorial Drive
Peoria Heights, IL 61616
1.309.685.4722 / 1.309.685.4784
info@apacedesign.com
www.apacedesign.com

Revised Above Floor Level 1 Plumbing Plan

Peoria PlayHouse Renovation
Peoria Park District
Glen Oak Park Pavillion
Peoria, Illinois 61603

NO.	ISSUE	DATE
1	Bidding Documents	03.19.14

EXPIRES 11.30.15
062-039301
LICENSED PROFESSIONAL ENGINEER
OF ILLINOIS

DATE 03.19.14	PROJECT NO. 24905.02
DRAWN BY BAW	SHEET
CHECKED MAC	P100
APPROVED MAC	2 OF 8

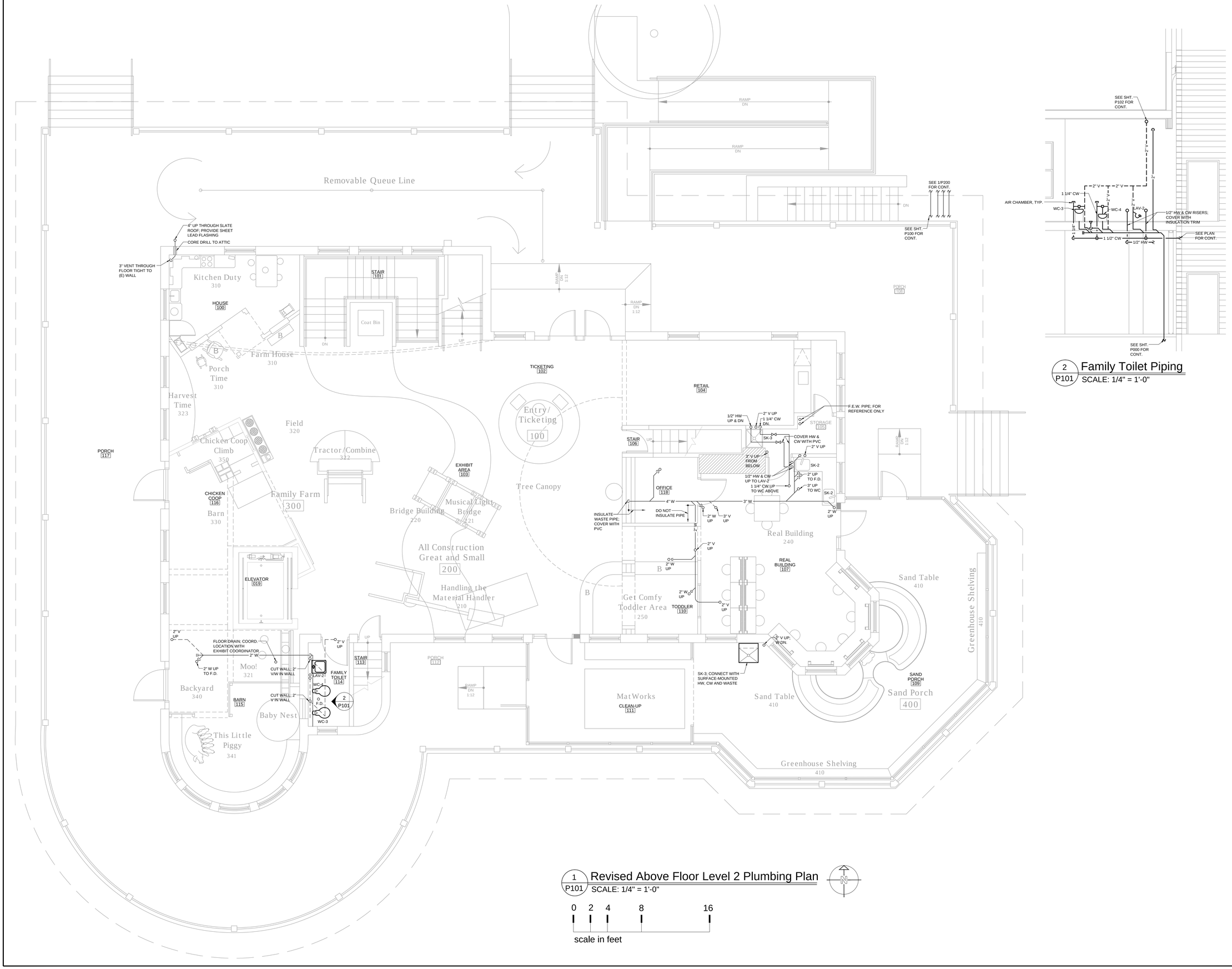

2 P101 Family Toilet Piping
SCALE: 1/4" = 1'-0"

1 P101 Revised Above Floor Level 2 Plumbing Plan
SCALE: 1/4" = 1'-0"

0 2 4 8 16
scale in feet

apaceDesign

Revised Above Floor Level 2 Plumbing Plan

Peoria PlayHouse Renovation
Peoria Park District
Glen Oak Park Pavillion
Peoria, Illinois 61603

NO.	ISSUE	DATE
1	Bidding Documents	03.19.14

EXPIRES 11.30.15
062-039301
LICENSED PROFESSIONAL ENGINEER OF ILLINOIS

DATE 03.19.14	PROJECT NO. 24905.02
DRAWN BY BAW	SHEET
CHECKED MAC	P101
APPROVED MAC	3 OF 8

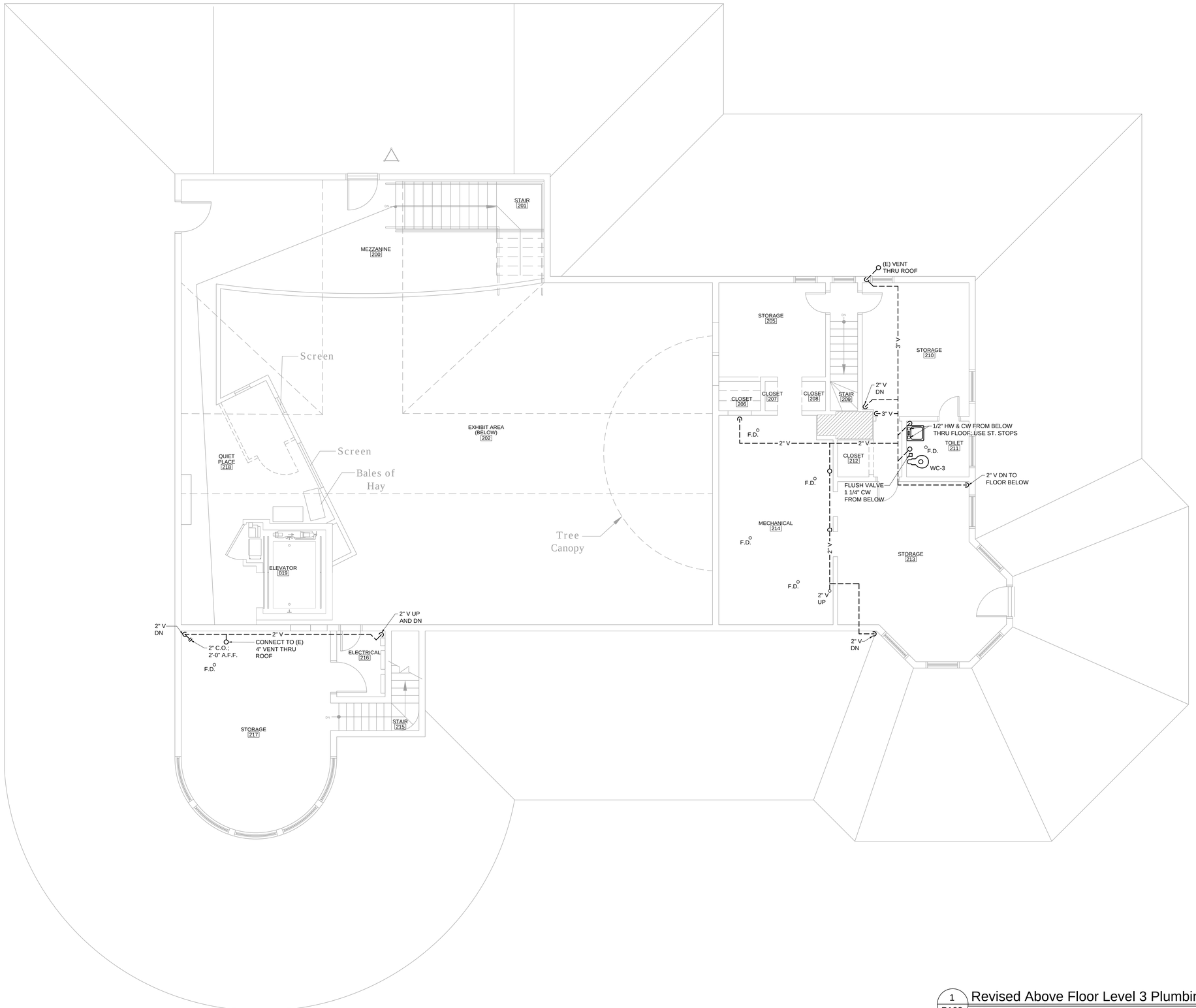

1 P102 Revised Above Floor Level 3 Plumbing Plan

SCALE: 1/4" = 1'-0"

0 2 4 8 16

scale in feet

N

apaceDesign

Revised Above Floor Level 3 Plumbing Plan

Peoria PlayHouse Renovation
Peoria Park District
Glen Oak Park Pavillion
Peoria, Illinois 61603

NO.	ISSUE	DATE
1	Bidding Documents	03.19.14

EXPIRES 11.30.15

062-039301 LICENSED PROFESSIONAL ENGINEER OF ILLINOIS

DATE 03.19.14	PROJECT NO. 24905.02
DRAWN BY BAW	SHEET
CHECKED MAC	P102
APPROVED MAC	4 OF 8

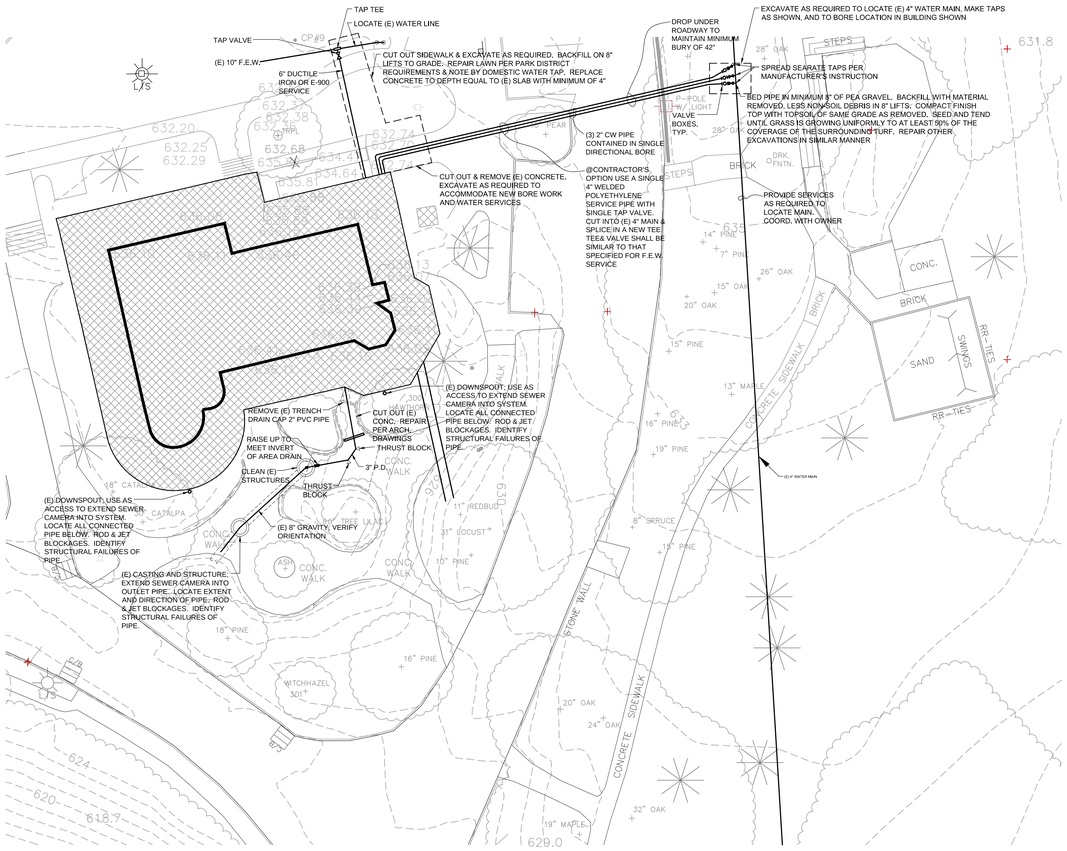

1 P200 Partial Site Plan
SCALE: 1" = 20'-0"

CONTACT J.U.L.I.E. BEFORE EXCAVATING. EXCAVATION/SERVICE SUBCONTRACTOR SHALL BE CERTIFIED TO WORK FOR ILLINOIS AMERICAN WATER Co.

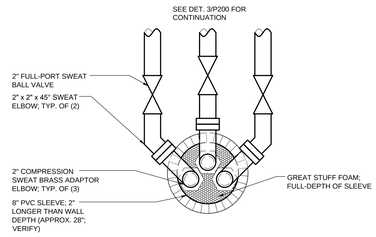

2 P200 Domestic Water Entry Sleeve
SCALE: 1 1/2" = 1'-0"

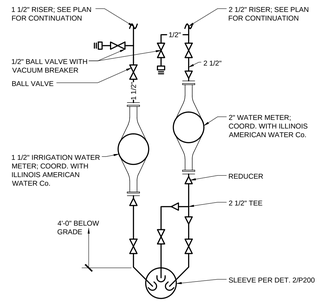

3 P200 Water Meter Piping Diagram
SCALE: N.T.S.

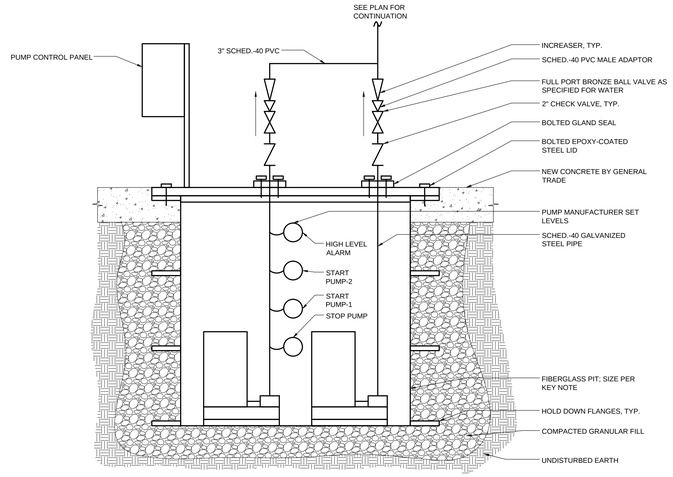

4 P200 Sump & Sanitary Pump Detail
SCALE: N.T.S.

5 P200 NOT USED
-

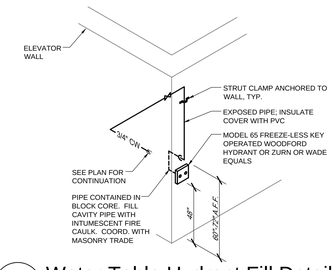

6 P200 Water Table Hydrant Fill Detail
SCALE: N.T.S.

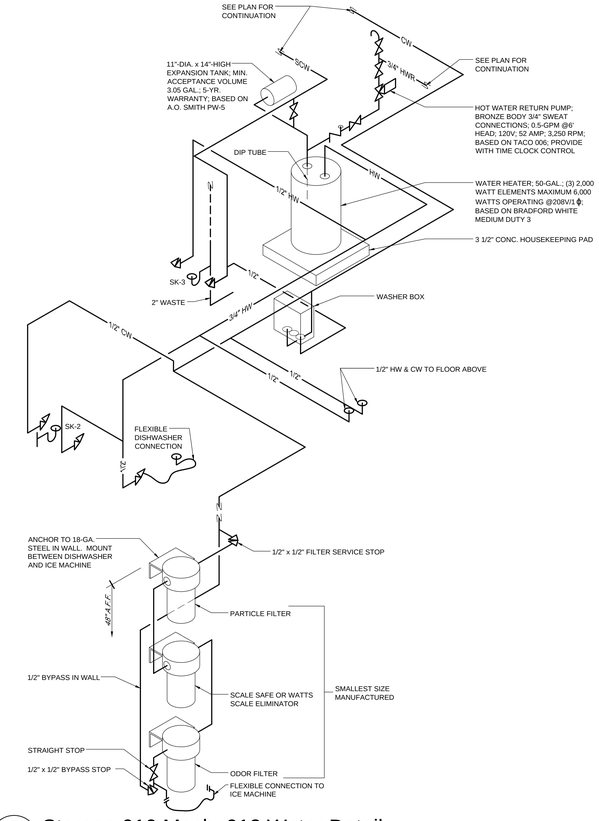

7 P200 Storage 010 Mech. 012 Water Details
SCALE: N.T.S.

apacedesign
2112 East War Memorial Drive
Peoria, Illinois 61614
(309) 685-2722 / (309) 685-4784
www.apacedesign.com
architects
planners
designers

Partial Site Plan & Details

Peoria PlayHouse Renovation
Peoria Park District
Glen Oak Park Pavillion
Peoria, Illinois 61603

NO.	ISSUE	DATE
1	Bidding Documents	03.19.14

EXPIRES 11.30.15
062-039301
LICENSED PROFESSIONAL ENGINEER OF ILLINOIS

DATE 03.19.14	PROJECT NO. 24905.02
DRAWN BY BAW	SHEET
CHECKED MAC	P200
APPROVED MAC	5 OF 8

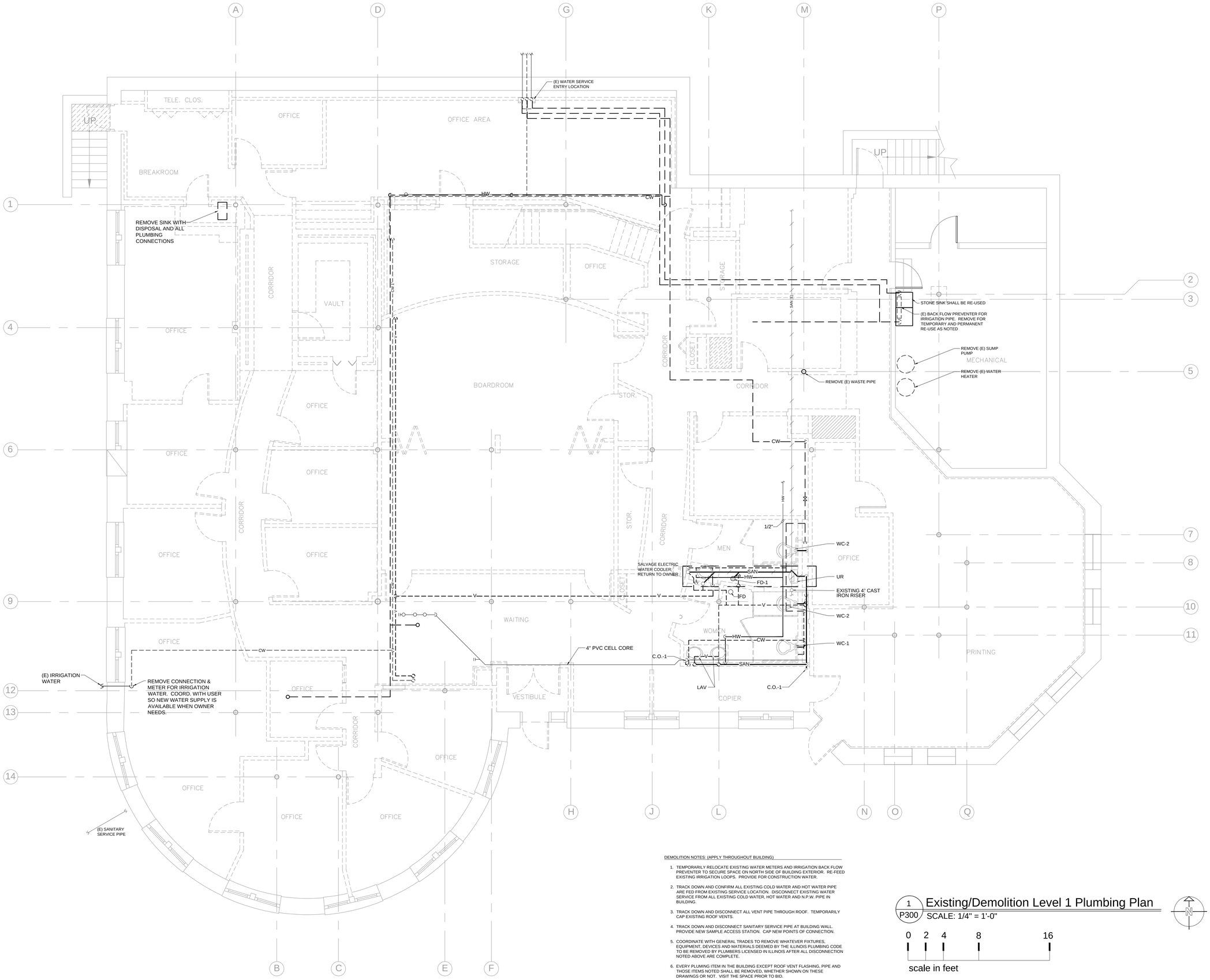

DEMOLITION NOTES: (APPLY THROUGHOUT BUILDING)

1. TEMPORARILY RELOCATE EXISTING WATER METERS AND IRRIGATION BACK FLOW PREVENTER TO SECURE SPACE ON NORTH SIDE OF BUILDING EXTERIOR. RE-FEED EXISTING IRRIGATION LOOPS. PROVIDE FOR CONSTRUCTION WATER.
2. TRACK DOWN AND CONFIRM ALL EXISTING COLD WATER AND HOT WATER PIPE ARE FED FROM EXISTING SERVICE LOCATION. DISCONNECT EXISTING WATER SERVICE FROM ALL EXISTING COLD WATER, HOT WATER AND N.P.W. PIPE IN BUILDING.
3. TRACK DOWN AND DISCONNECT ALL VENT PIPE THROUGH ROOF. TEMPORARILY CAP EXISTING ROOF VENTS.
4. TRACK DOWN AND DISCONNECT SANITARY SERVICE PIPE AT BUILDING WALL. PROVIDE NEW SAMPLE ACCESS STATION. CAP NEW POINTS OF CONNECTION.
5. COORDINATE WITH GENERAL TRADES TO REMOVE WHATEVER FIXTURES, EQUIPMENT, DEVICES AND MATERIALS DEEMED BY THE ILLINOIS PLUMBING CODE TO BE REMOVED BY PLUMBERS LICENSED IN ILLINOIS AFTER ALL DISCONNECTION NOTED ABOVE ARE COMPLETE.
6. EVERY PLUMING ITEM IN THE BUILDING EXCEPT ROOF VENT FLASHING, PIPE AND THOSE ITEMS NOTED SHALL BE REMOVED, WHETHER SHOWN ON THESE DRAWINGS OR NOT. VISIT THE SPACE PRIOR TO BID.

1 / P300 Existing/Demolition Level 1 Plumbing Plan

SCALE: 1/4" = 1'-0"

0 2 4 8 16

scale in feet

architects
engineers
designers

apace design

2111 East War Memorial Drive
Peoria, Illinois 61614
t (309) 685-4722 f (309) 685-4784
www.apacedesign.com

Existing/Demolition Level 1 Plumbing Plan

Peoria PlayHouse Renovation
Peoria Park District
Glen Oak Park Pavillion
Peoria, Illinois 61603

NO.	ISSUE	DATE
1	Bidding Documents	03.19.14

EXPIRES 11.30.15
062-039301
LICENSED PROFESSIONAL ENGINEER

DATE 03.19.14	PROJECT NO. 24905.02
DRAWN BY BAW	SHEET
CHECKED MAC	P300
APPROVED MAC	6 OF 8

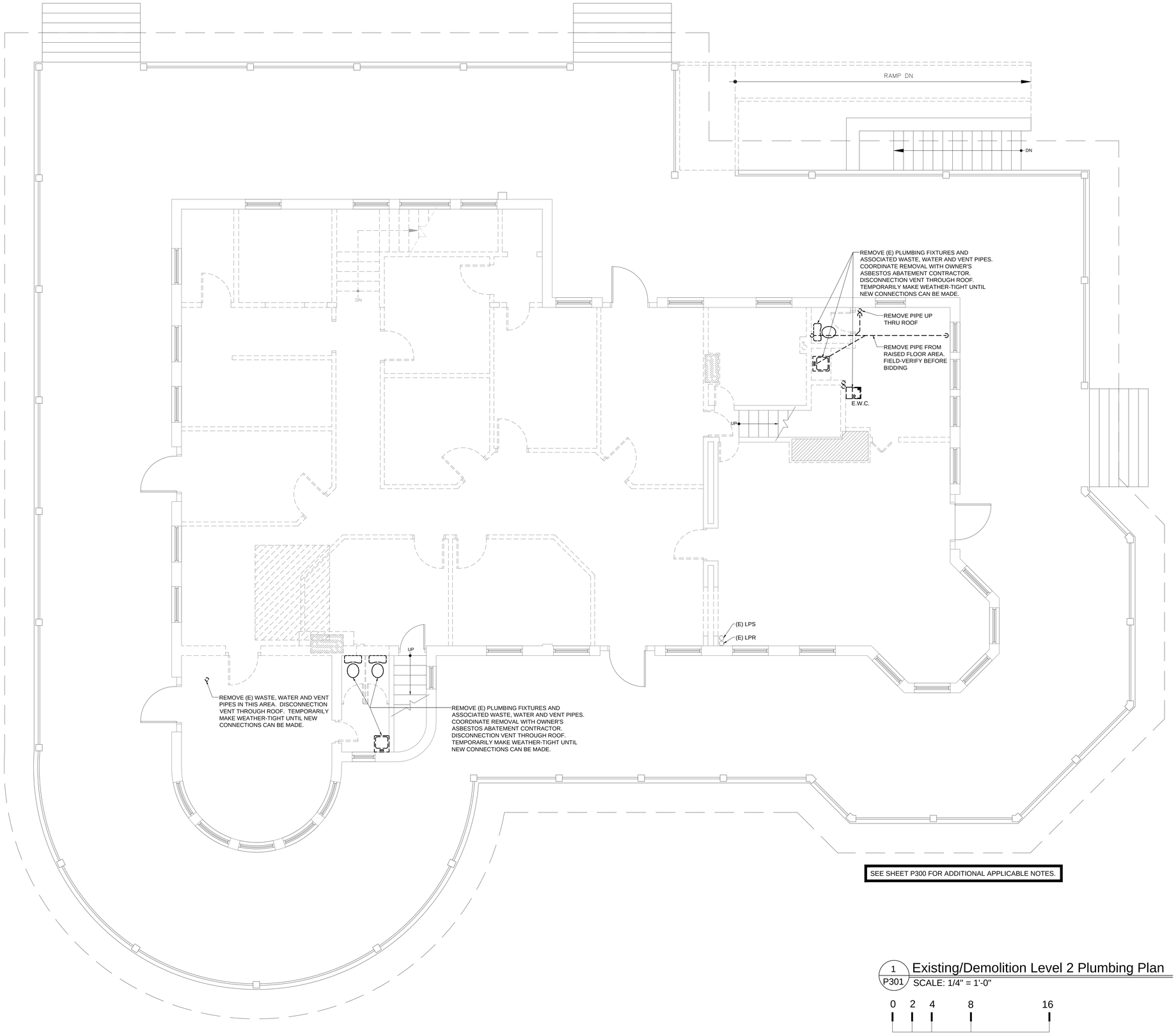

SEE SHEET P300 FOR ADDITIONAL APPLICABLE NOTES.

1 / P301 Existing/Demolition Level 2 Plumbing Plan

SCALE: 1/4" = 1'-0"

0 2 4 8 16

scale in feet

N

apace/Design
architects
engineers
designers
3112 Ball-Nie Memorial Drive
Peoria, Illinois 61614
t 309.685.4707 f 309.685.4784
www.apacedesign.com

apaceDesign

Existing/Demolition Level 2 Plumbing Plan

Peoria PlayHouse Renovation
Peoria Park District
Glen Oak Park Pavillion
Peoria, Illinois 61603

NO.	ISSUE	DATE
1	Bidding Documents	03.19.14

EXPIRES 11.30.15
062-039301
LICENSED
PROFESSIONAL
ENGINEER
OF
ILLINOIS

DATE 03.19.14	PROJECT NO. 24905.02
DRAWN BY BAW	SHEET
CHECKED MAC	P301
APPROVED MAC	7 OF 8

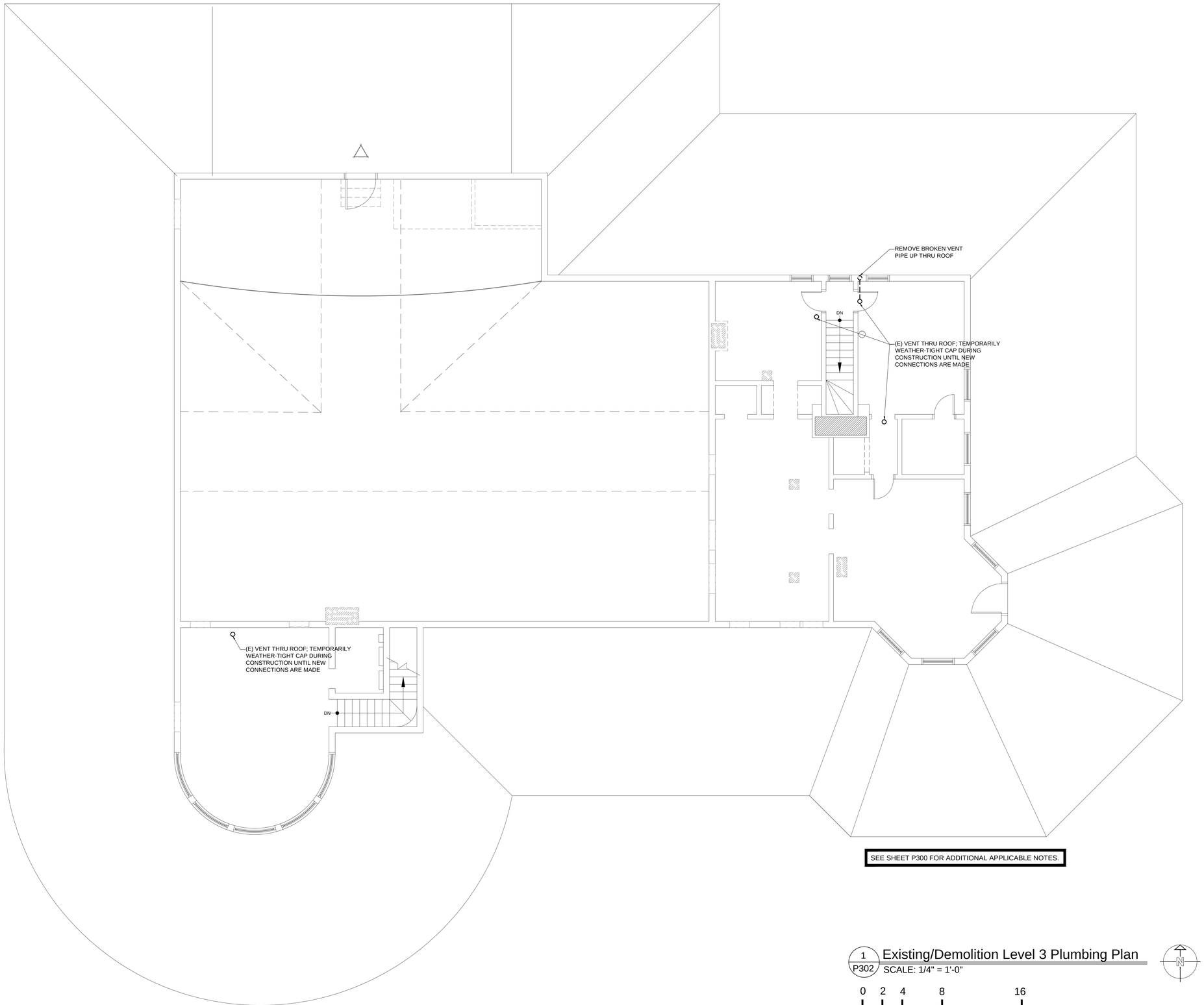

SEE SHEET P300 FOR ADDITIONAL APPLICABLE NOTES.

1 P302 Existing/Demolition Level 3 Plumbing Plan
SCALE: 1/4" = 1'-0"

0 2 4 8 16
scale in feet

apaceDesign
architects
engineers
designers
2112 East War Memorial Drive
Peoria, Illinois 61614
t 309.685.4722 f 309.685.4784
www.apaceDesign.com

Existing/Demolition Level 3 Plumbing Plan

Peoria PlayHouse Renovation
Peoria Park District
Glen Oak Park Pavillion
Peoria, Illinois 61603

NO.	ISSUE	DATE
1	Bidding Documents	03.19.14

EXPIRES 11.30.15
062-039301
LICENSED PROFESSIONAL ENGINEER OF ILLINOIS

DATE 03.19.14	PROJECT NO. 24905.02
DRAWN BY BAW	SHEET
CHECKED MAC	P302
APPROVED MAC	8 OF 8

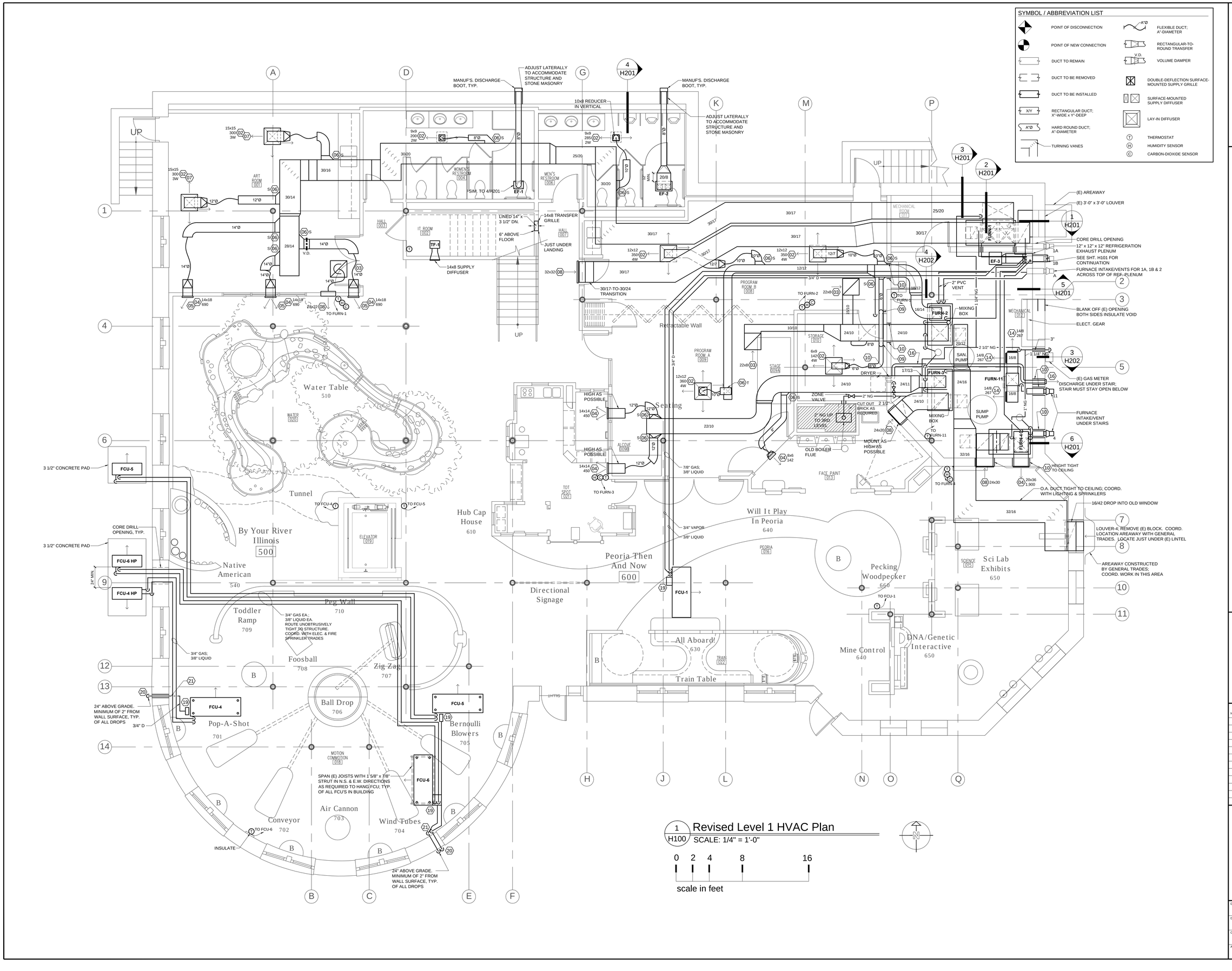

apaceDesign

Revised Level 1 HVAC Plan

Peoria PlayHouse Renovation
Peoria Park District
Glen Oak Park Pavillion
Peoria, Illinois 61603

NO.	ISSUE	DATE
1	Bidding Documents	03.19.14

EXPIRES 11.30.15
062-039301
LICENSED PROFESSIONAL ENGINEER OF ILLINOIS

DATE 03.19.14	PROJECT NO. 24905.02
DRAWN BY BAW	SHEET
CHECKED MAC	H100
APPROVED MAC	1 OF 9

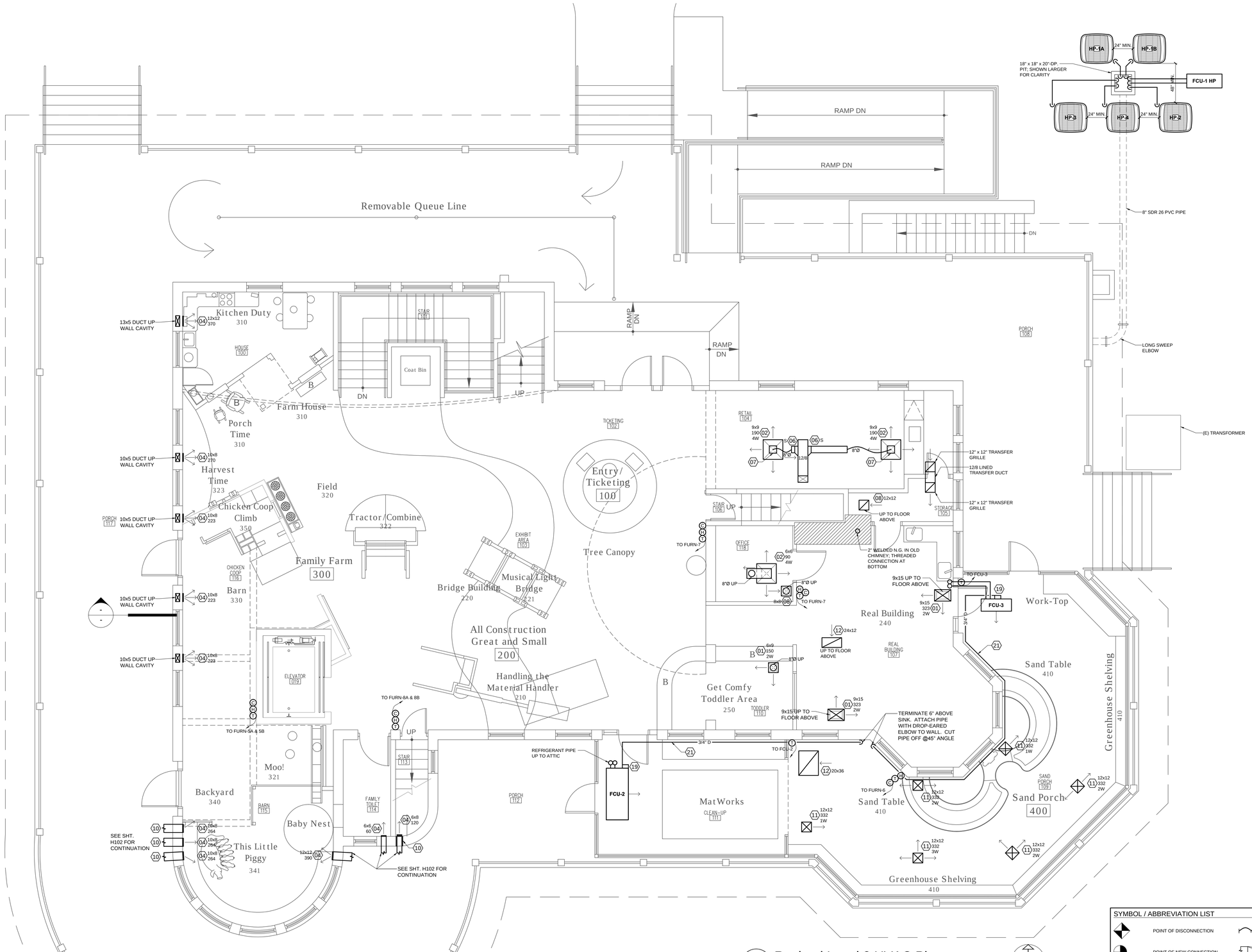

1 H101 Revised Level 2 HVAC Plan
SCALE: 1/4" = 1'-0"

0 2 4 8 16
scale in feet

SYMBOL / ABBREVIATION LIST

- POINT OF DISCONNECTION
- POINT OF NEW CONNECTION
- DUCT TO REMAIN
- DUCT TO BE REMOVED
- DUCT TO BE INSTALLED
- X/Y — RECTANGULAR DUCT; X"-WIDE x Y"-DEEP
- A"Ø — HARD ROUND DUCT; A"-DIAMETER
- A"Ø — FLEXIBLE DUCT; A"-DIAMETER
- RECTANGULAR-TO-ROUND TRANSFER
- V.D. — VOLUME DAMPER
- DOUBLE-DEFLECTION SURFACE-MOUNTED SUPPLY GRILLE
- SURFACE-MOUNTED SUPPLY GRILLE
- LAY-IN DIFFUSER
- T — THERMOSTAT
- H — HUMIDITY SENSOR
- C — CARBON-DIOXIDE SENSOR

apacedesign
architects
planners
designers
apacedesign
2112 East War Memorial Drive
Peoria, Illinois 61614
(309) 688-2212 (309) 691-4764
www.apacedesign.com

Revised Level 2 HVAC Plan

Peoria PlayHouse Renovation
Peoria Park District
Glen Oak Park Pavillion
Peoria, Illinois 61603

NO.	ISSUE	DATE
1	Bidding Documents	03.19.14

EXPIRES 11.30.15
062-039301
LICENSED PROFESSIONAL ENGINEER OF ILLINOIS

DATE 03.19.14	PROJECT NO. 24905.02
DRAWN BY BAW	SHEET
CHECKED MAC	H101
APPROVED MAC	2 OF 9

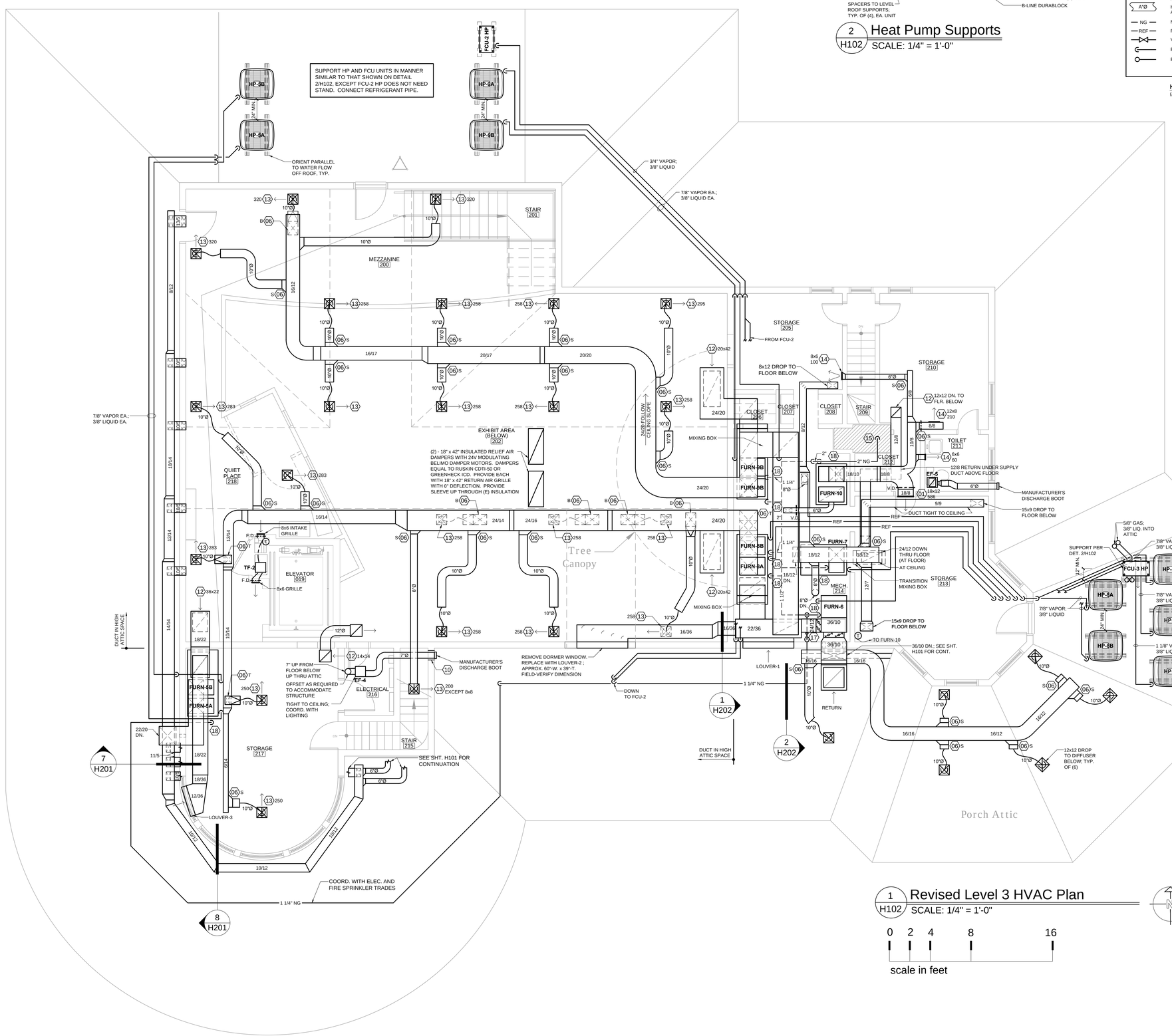

1 H102 Revised Level 3 HVAC Plan
SCALE: 1/4" = 1'-0"

0 2 4 8 16
scale in feet

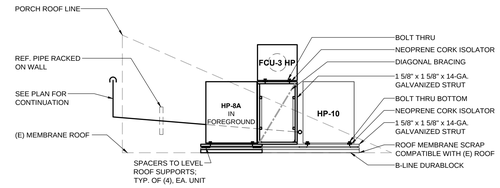

2 H102 Heat Pump Supports
SCALE: 1/4" = 1'-0"

SYMBOL / ABBREVIATION LIST

- POINT OF DISCONNECTION
- POINT OF NEW CONNECTION
- DUCT TO REMAIN
- DUCT TO BE REMOVED
- DUCT TO BE INSTALLED
- X/Y — RECTANGULAR DUCT; X"-WIDE x Y"-DEEP
- A"Ø — HARD ROUND DUCT; A"-DIAMETER
- NG — NATURAL GAS LINE
- REF — REFRIGERATION LINE
- VALVE; SEE SPEC.
- ELBOW DOWN
- ELBOW UP
- A"Ø — FLEXIBLE DUCT; A"-DIAMETER
- RECTANGULAR-TO-ROUND TRANSFER
- V.D. — VOLUME DAMPER
- DOUBLE-DEFLECTION SURFACE-MOUNTED SUPPLY GRILLE
- SURFACE-MOUNTED SUPPLY GRILLE
- LAY-IN DIFFUSER
- T — THERMOSTAT
- H — HUMIDITY SENSOR
- C — CARBON-DIOXIDE SENSOR

KEY NOTES FOR H100, H101 & H102 PLAN SHEETS

(APPLY TO ALL SIMILAR SITUATIONS)

- 01 — SIZE, CFM, # THROWS: SURFACE-MOUNTED DIRECTIONAL THROW DIFFUSER WITH BEVELED EDGE. SIZE, CFM AND NUMBER OF THROW DIRECTIONS PER ADJACENT NOTE. THROW CONFIGURATION PER ADJACENT GRAPHICAL ARROWS.
- 02 — SIZE, CFM, # THROWS: DIRECTIONAL THROW DIFFUSER MOUNTED IN 24" x 24" LAY-IN PAN. SIZE, CFM AND NUMBER OF THROW DIRECTIONS PER ADJACENT NOTE. THROW CONFIGURATION PER ADJACENT GRAPHICAL ARROWS.
- 03 — 22" x 22" RETURN GRILLE WITH 10" OR 12" LINED BACKER BOX AND FLEXIBLE DUCTED CONNECTIONS AS SHOWN TO RETURN MAINS OR TO TRANSFER OPENING.
- 04 — SIZE, CFM: SIDE-WALL SUPPLY GRILLE; ADJUST VANES TO SWEEP SPACE. SIZE AND CFM PER ADJACENT NOTE.
- 05 — MOUNT 6" ABOVE WINDOW; SEE ARCH. DRAWINGS.
- 06 — HIGH-EFFICIENCY RECTANGULAR-TO-ROUND TAKE-OFF (MINIMUM 125% INLET AREA TO OUTLET AREA RATIO) WITH VOLUME DAMPER. LOCATION PER ADJACENT NOTE:
  - B = BOTTOM
  - S = SIDE
  - T = TOP
- 07 — FABRICATED LINED DIFFUSER INLET BOX WITH STRAIGHTENING VANES.
- 08 — SIZE: WALL RETURN OR TRANSFER GRILLE MOUNTED JUST UNDER CEILING; SIZE PER ADJACENT NOTE.
- 09 — RISE ABOVE MAIN DUCT BELOW.
- 10 — CUT/CORE DRILL EXISTING WALL FOR NEW DUCT PASSAGE. COORDINATE NEW LINTEL WITH GENERAL TRADES.
- 11 — SIZE, CFM, # THROWS: SUREFACE-MOUNTED SUPPLY DIFFUSER CUT INTO EXISTING CEILING. ADJUST NOMINALLY AS REQUIRED TO ACCOMMODATE EXISTING STRUCTURE. SIZE, CFM AND NUMBER OF THROW DIRECTIONS PER ADJACENT NOTE. THROW CONFIGURATION PER ADJACENT GRAPHICAL ARROWS.
- 12 — SIZE: SURFACE-MOUNTED RETURN OR TRANSFER GRILLE CUT INTO EXISTING CEILING BETWEEN JOISTS. ADJUST NOMINALLY AS REQUIRED TO ACCOMMODATE EXISTING STRUCTURE. SIZE PER ADJACENT NOTE.
- 13 — CFM: 10" x 10" SURFACE-MOUNTED DOUBLE-DEFLECTION SUPPLY REGISTER CUT INTO EXISTING LATH AND PLASTER CEILING; SEE DET. 7/H200. CFM PER ADJACENT NOTE.
- 14 — SIZE, CFM: SURFACE-MOUNTED DOUBLE-DEFLECTION SUPPLY REGISTER CUT INTO DUCT OR EXISTING LATH AND PLASTER SIDE WALL. SIZE AND CFM PER ADJACENT NOTE.
- 15 — 2" WELDED GAS PIPE DOWN THROUGH OLD BOILER CHIMNEY.
- 16 — 4" ALUMINUM DRYER VENT. TERMINATE WITH LOUVERED PVC OUTLET.
- 17 — GAS ZONE VALVE; FULL SIZE OF PIPE.
- 18 — GAS DROP TO FURNACE WITH UNION, VALVE AND DIRT LEG; FULL SIZE OF GAS VALVE INLET.
- 19 — CONDENSATE LIFT PUMP TIGHTLY ATTACHED TO UNIT. ROUTE PIPE AS SHOWN.
- 20 — DRILL WALL FOR PIPE. FULL ANNULAR AREA WITH "GREAT STUFF" FOAM IN CENTER. CAULK INTERIOR AND EXTERIOR WITH COLORED SILICONE.
- 21 — 3/4" PVC PIPE TIGHTLY ATTACHED TO EXISTING CONSTRUCTION WITH SADDLE STRAP.

apacedesign
2117 East War Memorial Drive
Peoria, Illinois 61614
(309) 685-7213 (309) 685-4764
www.apacedesign.com
architects
designers
engineers

Revised Level 3 HVAC Plan

Peoria PlayHouse Renovation
Peoria Park District
Glen Oak Park Pavillion
Peoria, Illinois 61603

NO.	ISSUE	DATE
1	Bidding Documents	03.19.14

EXPIRES 11.30.15
062-039301
LICENSED PROFESSIONAL ENGINEER OF ILLINOIS

DATE: 03.19.14	PROJECT NO.: 24905.02
DRAWN BY: BAW	SHEET
CHECKED: MAC	H102
APPROVED: MAC	3 OF 9

DUCTLESS SPLIT SYSTEM VARIABLE REFRIGERANT UNITS

			FCU-1	FCU-2	FCU-3	FCU-4	FCU-5	FCU-6
TAG NUMBER			FCU-1	FCU-2	FCU-3	FCU-4	FCU-5	FCU-6
LOC.	INDOOR UNIT (ROOM NUMBER)		018	SAND PORCH	SAND PORCH	018	018	018
LOC.	OUTDOOR UNIT		N.E. PAD	N. ROOF	E. ROOF	W. GROUND	W. GROUND	W. GROUND
ASSOCIATED HEAT PUMP			FURN-4 / HP-4	FURN-6 / HP-6	FURN-6 / HP-6	FURN-1 / HP-1	FURN-1 / HP-1	FURN-1 / HP-1
REQUIRED FAN COIL SENSIBLE COOLING CAPACITY (MBH) (1)			21,000	20,000	10,500	26,800	26,800	26,800
REQUIRED FAN COIL COOLING TOTAL CAPACITY (MBH) (1)			27,000	23,700	12,400	32,940	32,940	32,940
REQUIRED HEAT PUMP COOLING CAPACITY (MBH) (@17°F)			36,000	36,000	18,000	34,000	34,000	34,000
SYSTEM SEER MINIMUM			13.0	13.0	13.0	13.0	13.0	13.0
FCU DATA	FAN FLOW RANGE CFM (WET COIL) (MIN.)		840	840	320-500	955	955	955
FCU DATA	WIDTH x LENGTH x HEIGHT (INCHES)		27" x 63" x 9"	27" x 63" x 9"	15" x 37" x 9"	26" x 72" x 9"	26" x 72" x 9"	26" x 72" x 9"
FCU DATA	✳ FAN Hp		1/6	1/6	1/15	1/6	1/6	1/6
FCU DATA	WEIGHT		120	120	110	120	120	120
FCU DATA	PIPE SIZE GAS SIDE		3/4	3/4	5/8	3/4	3/4	3/4
FCU DATA	PIPE SIZE LIQUID SIDE		3/8	3/8	3/8	3/8	3/8	3/8
FCU DATA	FAN VOLTAGE/PHASE		208V/1ϕ OR 50 VDC	208V/1ϕ OR 50 VDC	208V/1ϕ OR 50 VDC	208V/1ϕ OR 50 VDC	208V/1ϕ OR 50 VDC	208V/1ϕ OR 50 VDC
HP DATA	VOLTAGE/PHASE		208V/1ϕ	208V/1ϕ	208V/1ϕ	208V/1ϕ	208V/1ϕ	208V/1ϕ
HP DATA	MCA/MCOP (MAX.)		27/30	27/30	17.1/25	27/40	27/40	27/40
HP DATA	COMPRESSOR (RUNNING LOAD AMPS)		18.6	18.6	13.0	19.9	19.9	19.9
HP DATA	WEIGHT		220	220	155	220	220	220
MANUF. MODEL No.	CARRIER	OUTDOOR	30HDR036	30HDR036	38HDR18	38HDR048	38HDR048	38HDR048
MANUF. MODEL No.	CARRIER	INDOOR	40QAC036	40QAC036	40QAC024	40QAC048	40QAC048	40QAC048
MANUF. MODEL No.	MITSUBISHI	OUTDOOR	PUZ-A36	PUZ-A36	PUZ-A18	PUZ-A42	PUZ-A42	PUZ-A42
MANUF. MODEL No.	MITSUBISHI	INDOOR	PCA-A36	PCA-A36	PCA-A24	PCA-A42	PCA-A42	PCA-A42
MANUF. MODEL No.	DAIKEN	OUTDOOR	RZQ-36-PV	RZQ-36-PV	RZQ-18-PV	RZQ-42-PV	RZQ-42-PV	RZQ-42-PV
MANUF. MODEL No.	DAIKEN	INDOOR	FHQ-42-MV	FHQ-42-MV	FHQ-24-PV	FHQ-42-MV	FHQ-42-MV	FHQ-42-MV
MANUF. MODEL No.	TRANE	OUTDOOR	4TVH SERIES	4TVH SERIES	4TVH SERIES	4TVH SERIES	4TVH SERIES	4TVH SERIES
MANUF. MODEL No.	TRANE	INDOOR	4TVX SERIES	4TVX SERIES	4TVX SERIES	4TVX SERIES	4TVX SERIES	4TVX SERIES

PROVIDE (2) CONDENSATE LIFT PUMPS ((1) SPARE FOR EACH FAN COIL UNIT)
✳ ADDS UP TO HP DRIVEN FROM HP UNIT. INDOOR UNIT VOLTAGE 12-24V DC OR 208V AC
✳✳ RECOORDINATE SIZE OF OVERCURRENT PROTECTION ALLOWED BY MANUFACTURER

(1) 100% OF BOTH SENSIBLE AND TOTAL CAPACITIES SHALL BE MET AT 80°F DRY BULB AND 67°F WET BULB TEMPERATURES. MODEL NUMBERS SHOWN CAN BE ADJUSTED WITH PROOF OF CAPACITY.

FURNACE SCHEDULE

		FURN.-1	FURN.-2	FURN.-3	FURN.-4	FURN.-5	FURN.-6	FURN.-7	FURN.-8	FURN.-9	FURN.-10	FURN.-11
UNIT NUMBER		FURN.-1	FURN.-2	FURN.-3	FURN.-4	FURN.-5	FURN.-6	FURN.-7	FURN.-8	FURN.-9	FURN.-10	FURN.-11
LOCATION		RM 011	RM 012	RM 012	RM 014	RM 217	RM 214	RM 214	RM 214	RM 214	RM 214	RM 012
AREA SERVED (ROOM No.)		001, 004, 006, 020	008, 009	009, 021	015, 016	100, 113, 114, 115, 116	109	104, 110, 107, 118	202	202	205-214	012
MINIMUM FLOW REQUIRED (CFM)		3800 (1)	1200	1200	1990	2500	1990	1400	3100	3100	1200	800
★★★★★ MINIMUM OUTSIDE AIR AMOUNT (CFM)		530	272	272	326	241	203	280	200	200	50	20
★★★ EXTERNAL STATIC PRESSURE IN WATER		.75"	.60"	.70"	.70"	.60"	.70"	.70"	.80"	.80"	.70"	.60"
FUEL DATA (NG= NATURAL GAS/ HP=HEAT PUMP)		NG/HP	NG/HP	HP	NG/HP	NG/HP	NG/HP	NG/HP	NG/HP	NG/HP	NG/HP	NG
MAXIMUM INPUT (BTU/HR) (GAS)		200,000 (1)	80,000	N/A	100,000	160,000 (1)	80,000	60,000	160,000 (1)	160,000 (1)	60,000	40,000
REQUIRED EFF. AFUE		92%	92%	N/A	92%	92%	92%	92%	92%	92%	92%	92%
HEATING OUTPUT (BTU/HR.) MINIMUM 1 STAGE		110,000 (1)	72,000	N/A	75,200	88,000 (1)	72,000	47,000	95,000 (1)	95,000 (1)	49,200	30,000
		-	-	N/A	-	-	-	-	-	-	-	-
SENSIBLE COOLING OUTPUT (BTU/HR)		70,000 (1)	26,850	26,850	44,100	53,600 (1)	39,100	33,000	62,250 (1)	62,250 (1)	24,000	N/A
TOTAL COOLING OUTPUT (BTU/HR)		95,000 (1)	42,150	42,150	57,000	67,600 (1)	44,900	42,300	73,000 (1)	73,000 (1)	32,000	N/A
ENTERING AIR CLG. DB/WB (°F)		77.7/65.7	79.7/68.2	79.7/68.2	77.7/65.2	77.1/64.8	76.0/63.9	77.6/65.4	76.2/63.9	76.2/63.9	77.6/65.4	N/A
COOLING MEDIUM DATA		R-410A	R-410A	R-410A	R-410A	R-410A	R-410A	R-410A	R-410A	R-410A	R-410A	R-410A
COOLING COIL SIZE/NOM		2 @4 TON	3 1/2 TON	3 1/2 TON	5 TON	2-3TON	4 TON	3 1/2 TON	2-4TON	2-4TON	3 TON	N/A
MAXIMUM FAN POWER		2- 1.0Hp (2)	1/2 Hp	3/4 Hp	1-1 Hp	2-1/2 Hp (2)	1.0Hp	1/2 Hp	(2) 3/4 Hp	(2) 3/4 Hp	1/2 Hp	1/3 Hp
BLOWER MOTOR VOLTS (MAX) ★		120	120	208	120	120	120	120	120	120	120	120
FILTER SIZE (LENGTH x WIDTH x HEIGHT)		(4) 16" x 20" x 4"	(1) 24" x 24" x 4"	(1) 24" x 24" x 4"	(1) 24" x 24" x 4"	(4) 16" x 16" x 4"	(4) 16" x 16" x 4"	(1) 24" x 24" x 4"	(4) 16" x 20" x 4"	(4) 16" x 20" x 4"	(1) 24" x 24" x 4"	(1) 24" x 24" x 4"
FILTER TYPE ★★★★ BASIS OF DESIGN		FARR 30/30	FARR 30/30	FARR 30/30	FARR 30/30	FARR 30/30	FARR 30/30	FARR 30/30	FARR 30/30	FARR 30/30	FARR 30/30	FARR 30/30
CONFIGURATION		TWINNED	1 FURNACE	FAN COIL	1 FURNACE	TWINNED	1 FURNACE	1 FURNACE	TWINNED	TWINNED	1 FURNACE	1 FURNACE
VENT AND INTAKE SIZE FOR PIPE TO ROOF		3"	2"	N/A	3"	2"	2"	2"	2"	2"	2"	2"
MANUF.'S	CARRIER 59SC2B	100-22	080-16	FB4C048	100-22	080-16	100-22	060-16	080-20	080-20	060-16	040-10
MANUF.'S	TRANE TUH1D	A948-80	A942-80	TAM 5AOC	A960-100	A936-80	A948-80	A942-60	A948-80	A948-80	A936-60	A924-60
MANUF.'S	LENNOX	-	-	-	-	-	-	-	-	-	-	-
ACCESSORIES		-	-	-	-	-	-	-	-	-	-	-
★★ECONO ECONOMIZER T THERMOSTAT CO2 CARBON DIOXIDE SENSOR VT VENT TERMINAL H HUMIDISTAT		T CO2 H	T CO2 H	T CO2 H	T CO2 H	T CO2 VT H	T CO2 VT H	T CO2 VT H	-	-	T H	T

★VERIFY WITH SUCCESSFUL VENDOR WORST CASE ELECTRICALLY SHOWN.
★★CONTROLER REQUIRED; DAMPERS ARE INDIVIDUAL OR MIXING BOX AS DETAILED.
★★★ NOT COUNTING COIL
★★★★ALL FILTERS MERV 8
★★★★★NOTE TO CITY OF PEORIA: THESE AMOUNTS MEET THE REQUIREMENTS OF 2006 IMC CHAPTER 4, TABLE 403.3 AND PARAGRAPH 405.1.

(1) TOTAL CAPACITY OF TWINNED FURNACES
(2) EACH TWINNED FURNACE HAS ITS OWN BLOWER MOTOR

HEAT PUMP SCHEDULE

		HP-1A+B	HP-2	HP-3	HP-4	HP-5A+B	HP-6	HP-7	HP-8	HP-9	HP-10
UNIT NUMBER		HP-1A+B	HP-2	HP-3	HP-4	HP-5A+B	HP-6	HP-7	HP-8	HP-9	HP-10
LOCATION		N.E. PAD	N.E. PAD	N.E. PAD	N.E. PAD	N.E. PAD	E. ROOF	E. ROOF	E. ROOF	N. ROOF	E. ROOF
FURNACE SERVED		FURN 1	FURN 2	FURN 3	FURN 4	FURN 5	FURN 6	FURN 7	FURN 8	FURN-9	FURN-10
REFRIGERATION CAPACITY (BTU/HR) COOLING		95,000	42,000	42,000	57,000	67,600	45,000	42,000	86,000	86,000	32,000
REFRIGERANT TYPE		2-410A	2-410A	2-410A	2-410A	2-410A	2-410A	2-410A	2-410A	2-410A	2-410A
HEATING CAPACITY @ 17°F		-	-	-	-	-	-	-	-	-	-
AMBIENT TEMPERATURE COOLING		92	92	92	92	92	92	92	92	92	92
SEER (MINIMUM)		13.5	13.5	13.5	13.0	13.5	13.0	13.5	13.5	13.5	13.5
COMPRESSOR TYPE		SCROLL	SCROLL	SCROLL	SCROLL	SCROLL	SCROLL	SCROLL	SCROLL	SCROLL	SCROLL
LIQUID LINE SIZE		3/8" EA.	3/8"	3/8"	3/8"	3/8" EA.	3/8"	3/8"	3/8" EA.	3/8" EA.	3/8"
VAPOR LINE SIZE		7/8" EA.	7/8"	7/8"	1 1/8"	7/8" EA.	7/8"	7/8"	7/8" EA.	7/8" EA.	7/8"
WEIGHT LBS (MAXIMUM) EACH (1)		310	295	295	340	280	310	295	310	310	280
NOMINAL TONNAGE		2@4 TON	3 1/2 TON	3 1/2 TON	5 TON	2-3 TON	5 TON	3 1/2 TON	2-4 TON	2-4 TON	3 TON
ELEC. DATA	MINIMUM FUSE SIZE* EACH	35	35	35	50	30	35	35	35	35	30
ELEC. DATA	VOLTAGE/PHASE	208 V 1 PHASE	208 V 1 PHASE	208 V 1 PHASE	208 V 1 PHASE	208 V 1 PHASE	208 V 1 PHASE	208 V 1 PHASE	208 V 1 PHASE	208 V 1 PHASE	208 V 1 PHASE
ELEC. DATA	TOTAL AMPACITY (MAXIMUM)	2@29	26	26	35	2@24	35	26	2@29	2@29	24
ELEC. DATA	MAXIMUM FUSE SIZE★	40 EA	40 EA	40 EA	50	35 EA	40	40 EA	40 EA	40 EA	35
ACCESSORIES HH HYBRID HEAT DUEL FUEL HG HAIL GUARD DS ELECTRIC DISCONNECT SWITCH IS CONDENSER INLET SCREEN CCH CRANK CASE HEATER		HH HG CCH	HH HG CCH	HH HG CCH	HH HG CCH	HH HG CCH	HH HG CCH	HH HG CCH	HH HG CCH	HH HG CCH	HH HG CCH
LENGTH x WIDTH x HEIGHT (EACH 1)		40x36x	40x36x	40x36x	40x36x	40x36x	40x36x	40x36x	40x36x	40x36x	40x36x
MANUF.'S	CARRIER★★ 25HPA4	2-048	042	042	060	2-036	048	042	2-048	2-048	036
MANUF.'S	TRANE 4TWR3	2-048	042	042	060	2-036	048	042	2-048	2-048	036
MANUF.'S	LENNOX	-	-	-	-	-	-	-	-	-	-

DELIVER ACTUAL TO ELECTRIC TRADE WHEN SUBMITTALS ARE PROCESSED
★MAXIMUM FUSE IS WHAT MANUFACTURER REQUIRES TO PROTECT UNIT; SIZE CAN BE SMALLER AS LONG AS UNIT DOES NOT "NUSCIANCE TRIP" AND WIRE IS PROTECTED
★★BASIS OF DESIGN

(1) NOTED VALUE IS FOR EACH UNIT; FOR TWIN FURNACE UNITS VALUE IS DOUBLE THAT SHOWN

LOUVER/ VENT SCHEDULE

UNIT NUMBER	LOUVER-1	LOUVER-2	LOUVER-3	LOUVER-4
UNIT SERVED	FURNS. 8-9-6	FURNS. 8-9-6	FURN-5	FURNS. 2-3-4
AIR FLOW CFM	8,470		2,500	4,400
REQUIRED FREE AREA (SQ. FT.)	8.1	8.1	4.2	5.9
REQUIRED SIZE (INCHES)	60" x 36" x 6"	60" x 36" x 6"	36" x 36" x 6"	42" x 42" x 6"
TYPE	DRAINABLE	DRAINABLE	DRAINABLE	DRAINABLE
MAXIMUM AIR PRESS. DROP (IN WATER)	0.1"	0.6"	0.6"	.10"
BASED ON: RUSKIN	6375D	6375D	6375D	6375D
ACCEPTABLE: GREENHECK	ESD635	ESD635	ESD635	ESD635

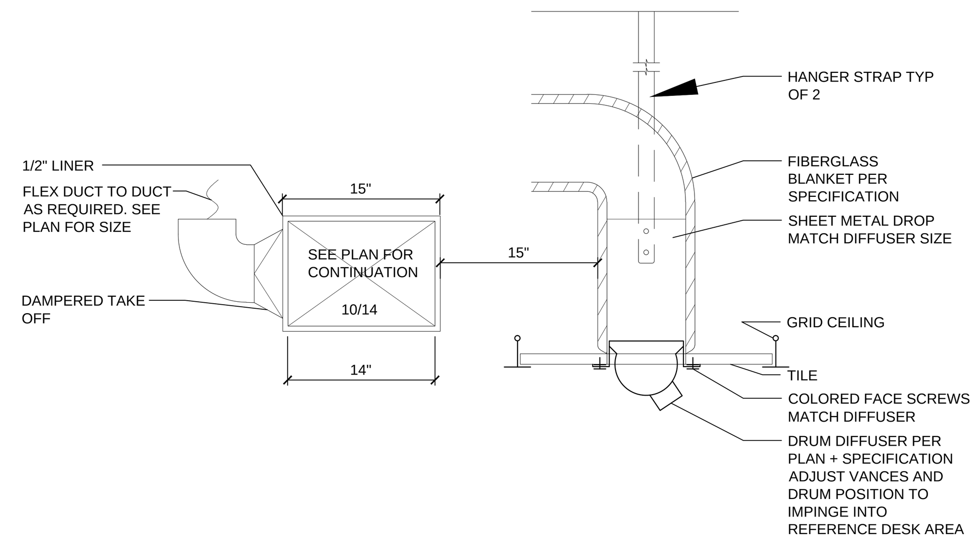

1 H200 Drum Diffuser Mounting Detail
NOT TO SCALE

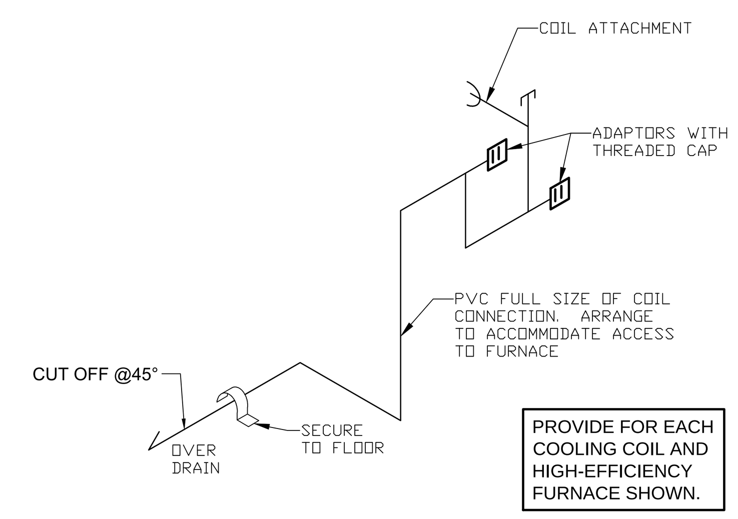

2 H200 Furnance Condensate Drain Detail
NOT TO SCALE

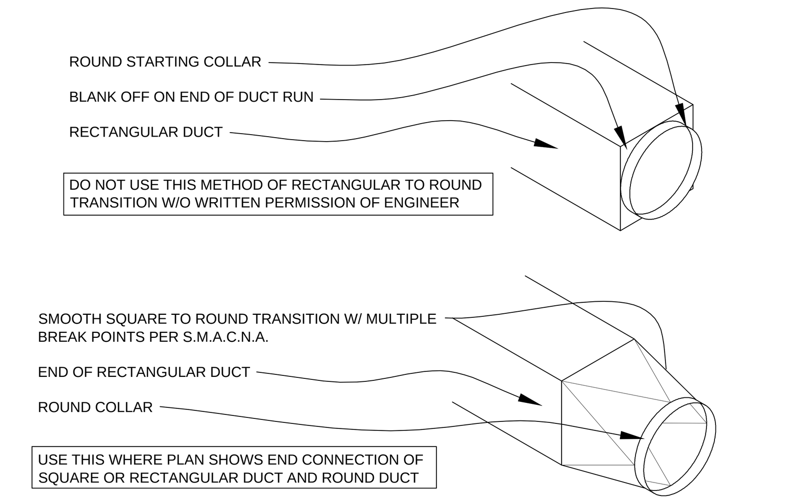

3 H200 Rectangular-to-Round Transition Detail
NOT TO SCALE

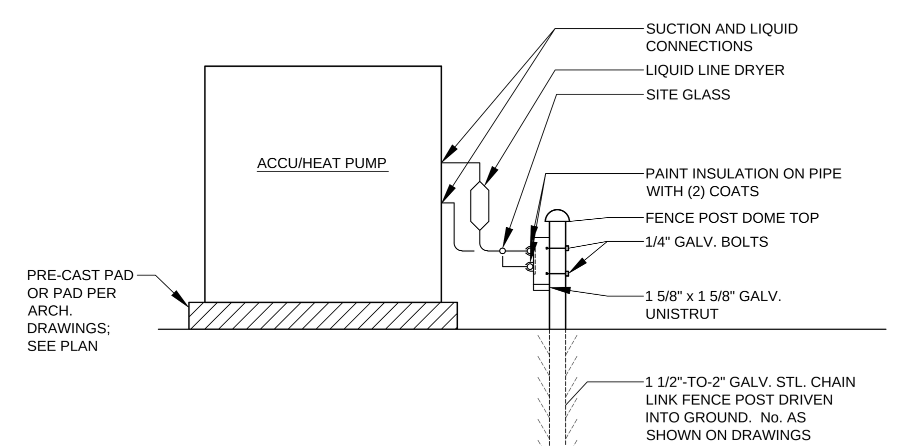

4 H200 ACCU Piping Support Detail
NOT TO SCALE

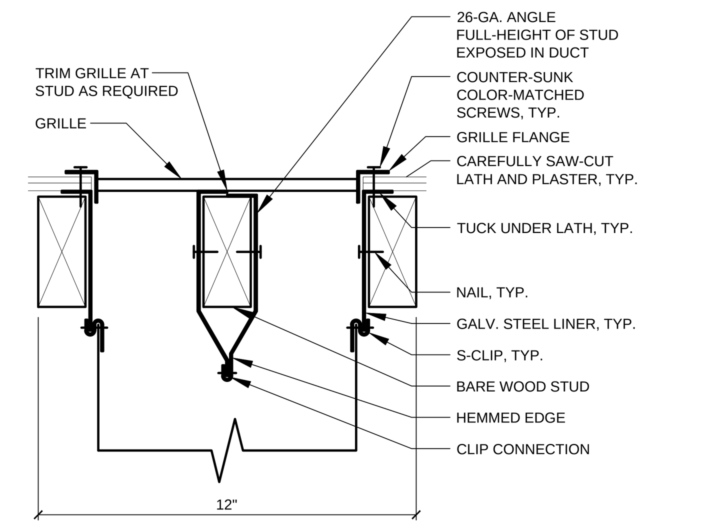

5 H200 Stud Air Foil Detail
3" = 1'-0"

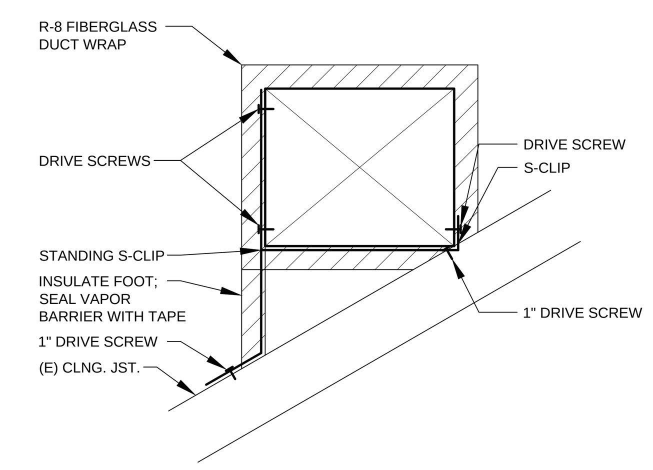

6 H200 Attic Duct Support Detail
NOT TO SCALE

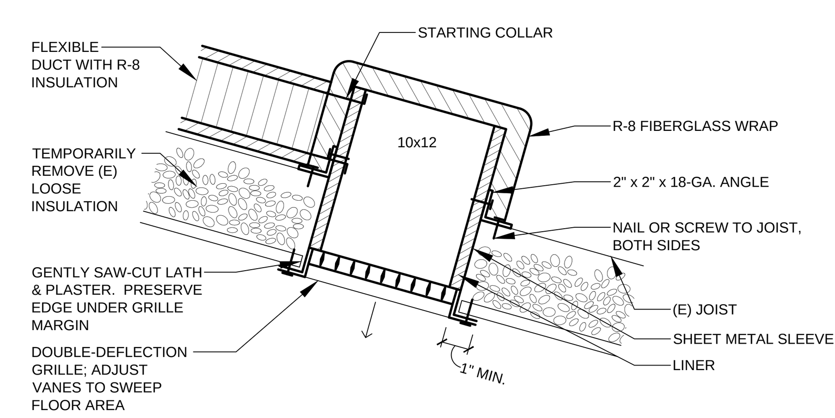

7 H200 High Ceiling Grille Mounting Detail
NOT TO SCALE

GENERAL HVAC NOTES:

1. SEE SPECIFICATION 230900 FOR DESCRIPTION OF CONTROL WORK.
2. PROVIDE ALL MISCELLANEOUS DEVICES AND MATERIALS REQUIRED BY EQUIPMENT MANUFACTURERS FOR A CODE-WORTHY INSTALLATION.
3. SEE REFLECTED CEILING PLAN FOR LOCATION/COORDINATION OF DIFFUSERS, RETURNS AND EXHAUSTS.
4. ALL EQUIPMENT SHOWN SHALL HAVE CONNECTIONS SCHEDULED AND REQUIRED BY MANUFACTURER. THIS INCLUDES DUCT.

FAN SCHEDULE

		EF-1	EF-2	EF-3	EF-4	EF-5	TF-1	TF-2
UNIT NUMBER		EF-1	EF-2	EF-3	EF-4	EF-5	TF-1	TF-2
LOCATION (ROOM No.)		004	006	012	216	211	002	ELEV. EQ.
AREA SERVED		WOMEN	MEN	REFER PIPE	RM. 114	RM. 211	RM. 002	ELEV. EQ.
MINIMUM FLOW REQUIRED (CFM)		320	480	200	150	75	200	200
STATIC PRESSURE IN WATER		.25"	.40"	.25"	.25"	.25"	.25"	.25"
TYPE		CEIL CENT.	CEIL CENT.	CEIL CENT.	INLINE CENT.	CEIL CENT.	CEIL CENT.	CEIL CENT.
MAXIMUM SONES		5.5	6.2	4.3	3.0	3.0	4.3	4.3
MAXIMUM RPM		1,205	1,375	1,610	1,500	1,500	1,500	1,500
DRIVE		DIRECT	DIRECT	DIRECT	DIRECT	DIRECT	DIRECT	DIRECT
MAXIMUM POWER REQUIRED (WATTS)		175	350	192	120	70	192	192
VOLTAGE/PHASE		120/1	120/1	120/1	120/1	120/1	120/1	120/1
ACCESSORIES GD GRAVITY DAMPER MD MOTORIZED DAMPER DS DISCONNECT SWITCH ✳ SC SPEED CONTROL ✳ MDS MOTION DETECTOR SWITCH WITH TIME DELAY ✳ T THERMOSTAT		GD DS SC	GD DS SC	GD DS SC T	GD DS SC	GD DS SC	GD DS SC T	GD DS T
MANUF.'S	GREENHECK	SPA-390	SPA-700	SPA-250	SPA-190	SPA-110	SPA-250	SPA-250
MANUF.'S	LOREN COOK (BASIS OF DESIGN)	GC-520	GC-720	GC-340	GN-160	GC-140	GC-180	GC-180
MANUF.'S		-	-	-	-	-	-	-

✳ FURNISH LOOSE TO ELECTRIC TRADES FOR INSTALLATION.

SEQUENCE OF OPERATION

- EF-1 & 2 SHALL OPERATE WHEN MUSEUM IS OPEN FOR BUSINESS; SEE TEMPERATURE CONTROL SPECIFICATIONS.
- EF-4 & 5 SHALL OPERATE WITH TIME DELAY WHEN ROOM LIGHTS ARE ENERGIZED.
- EF-5 MECHANICAL ROOM FAN SHALL OPERATE CONTINUOUSLY
- TF-1 SERVER ROOM FAN SHALL ENERGIZE WHEN TEMPERATURE RISES ABOVE 75°F WITH LINE VOLTAGE THERMOSTAT.
- TF-2 ELEVATOR EQUIPMENT CLOSET FAN SHALL ENERGIZE WHEN TEMPERATURE RISES ABOVE 78°F WITH LINE VOLTAGE THERMOSTAT.

apaceDesign
2112 East War Memorial Drive
Peoria Illinois 61614
t:309.685.4722 f:309.685.4784
www.apaceDesign.com
architects engineers designers

HVAC Schedules and Details

Peoria PlayHouse Renovation
Peoria Park District
Glen Oak Park Pavillion
Peoria, Illinois 61603

NO.	ISSUE	DATE
1	Bidding Documents	03.19.14

EXPIRES 11.30.15
MARK A. CORDES 062-039301 LICENSED PROFESSIONAL ENGINEER OF ILLINOIS

DATE 03.19.14
PROJECT NO. 24905.02
DRAWN BY BAW
CHECKED MAC
APPROVED MAC
SHEET H200
4 OF 9

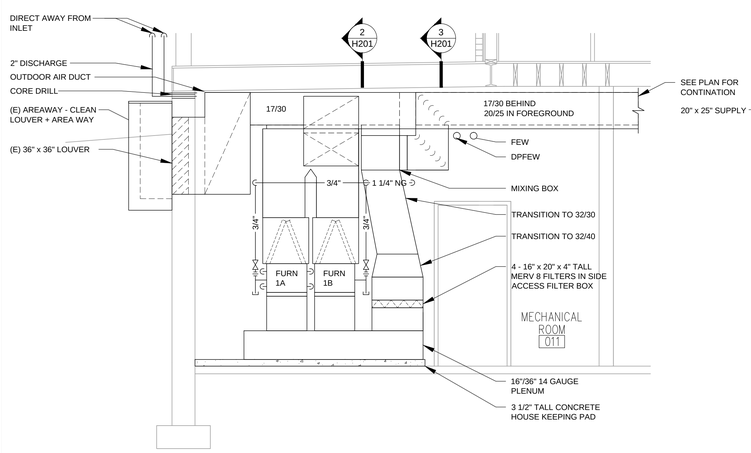

1 H201 SECTION THRU FURNACE 1A + 1B
SCALE: 3/8" = 1'-0"

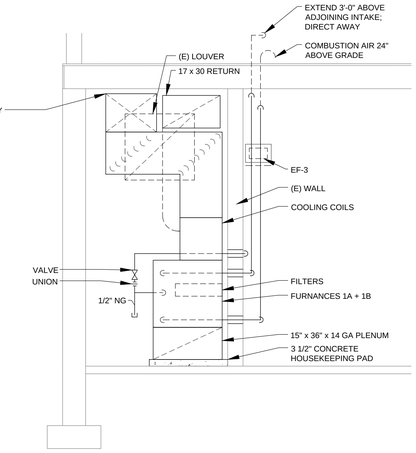

2 H201 SECTION THRU FURNACE 1B
SCALE: 3/8" = 1'-0"

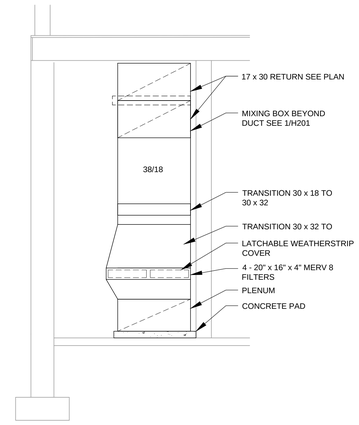

3 H201 SECTION THRU FURNACE 1A + 1B RETURN
SCALE: 3/8" = 1'-0"

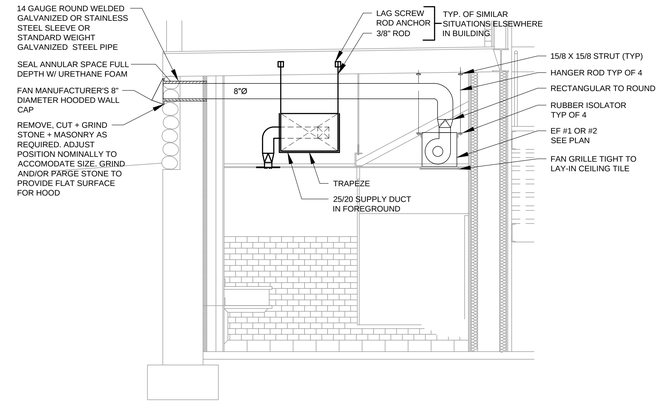

4 H201 SECTION THRU TOILET ROOM
TYPICAL MEN'S + WOMEN'S (SEE PLAN FOR DUCT SIZES)
SCALE: 3/8" = 1'-0"

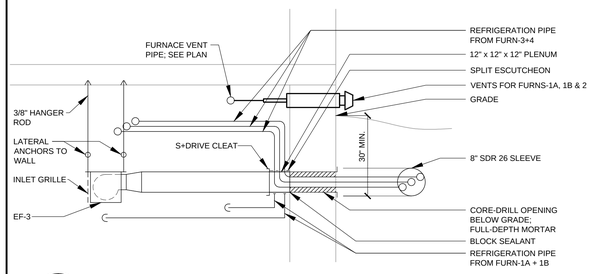

5 H201 EF-3 MOUNTING DETAIL
SCALE: 1/2" = 1'-0"

GENERAL NOTE:
APPLIES TO ALL SHEETS

DUCTWORK IN EQUIPMENT ROOMS SHALL BE LINED WITH SHEET METAL. ALTERNATE 5 DUCT SHALL ONLY BE USED IN UNHEATED ATTICS.

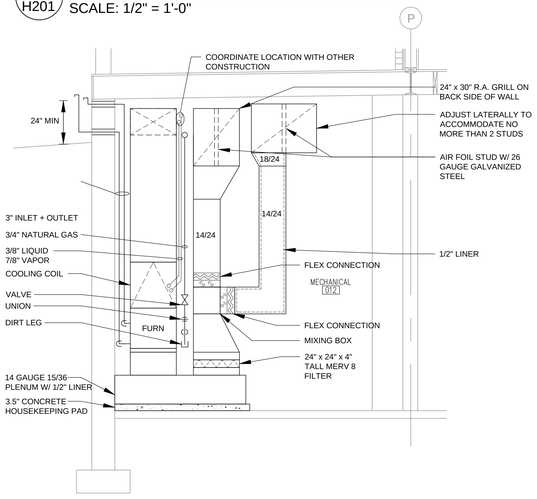

6 H201 SECTION THRU FURNACE 4
SCALE: 3/8" = 1'-0"

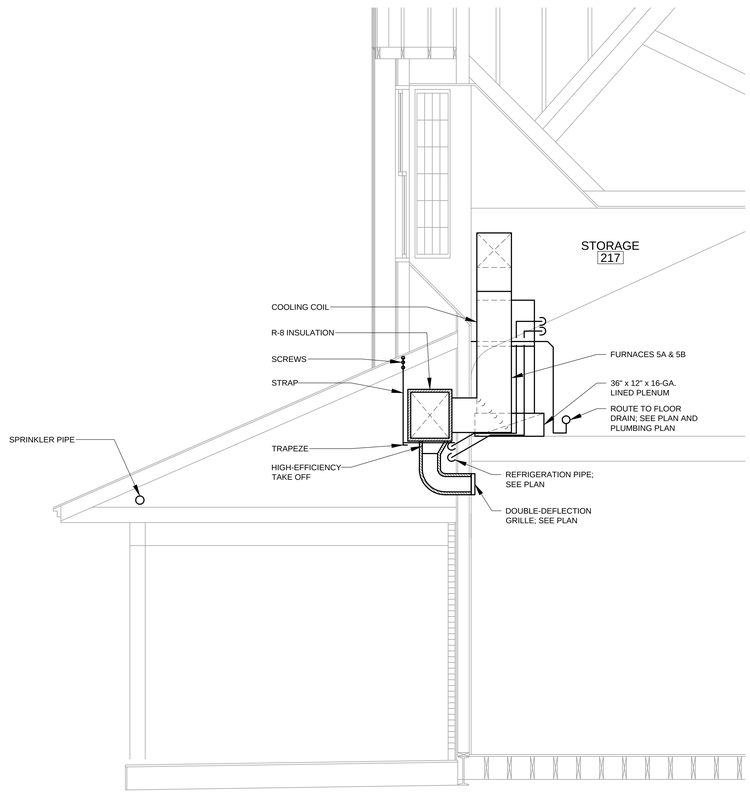

7 H201 FURNACE 5A & 5B SOUTH ELEVATION
SCALE: 3/8" = 1'-0"

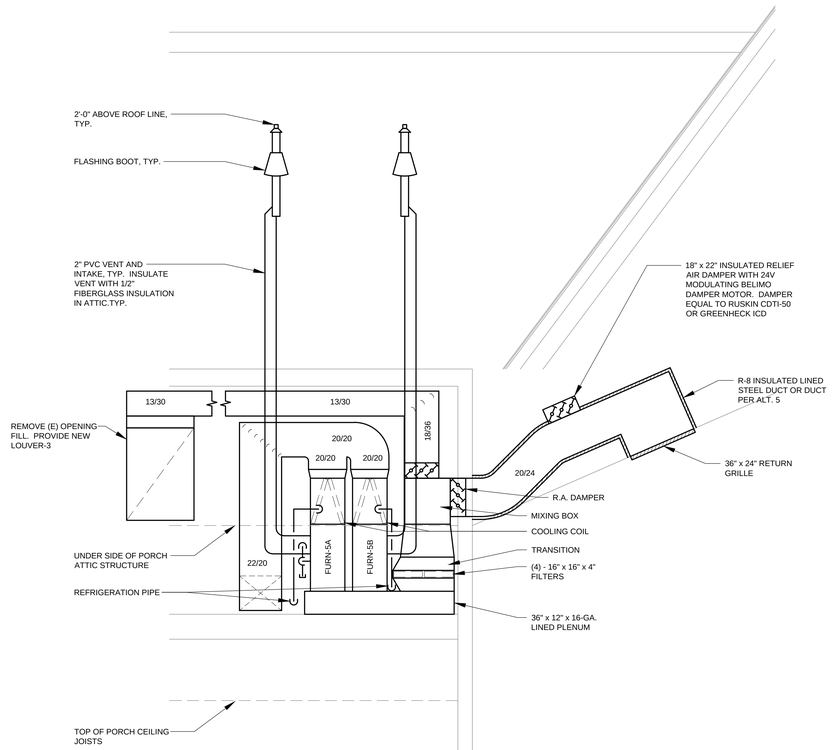

8 H201 FURNACE 5A & 5B EAST ELEVATION
SCALE: 3/8" = 1'-0"

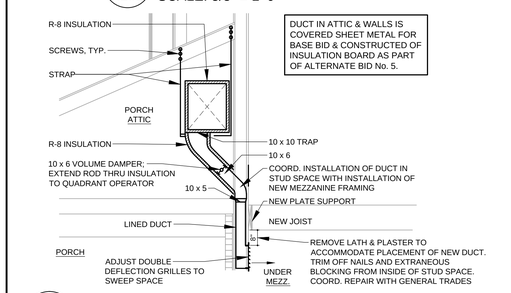

DUCT IN ATTIC & WALLS IS COVERED SHEET METAL FOR BASE BID & CONSTRUCTED OF INSULATION BOARD AS PART OF ALTERNATE BID No. 5.

9 H201 UNDER MEZZANINE GRILLE DUCT DETAIL
SCALE: 3/8" = 1'-0"

apacedesign
2112 Cedar Hill, Metamora Drive
Peoria, Illinois 61614
Phone 309-693-2100 Fax 309-693-4764
www.apacedesign.com
architects
engineers
designers

HVAC Sections

Peoria PlayHouse Renovation
Peoria Park District
Glen Oak Park Pavillion
Peoria, Illinois 61603

NO.	ISSUE	DATE
1	Bidding Documents	03.19.14

EXPIRES 11.30.15
062-039301
LICENSED PROFESSIONAL ENGINEER
OF ILLINOIS

DATE 03.19.14	PROJECT NO. 24905.02
DRAWN BY JPN/BAW	SHEET
CHECKED MAC	H201
APPROVED MAC	5 OF 9

CODE

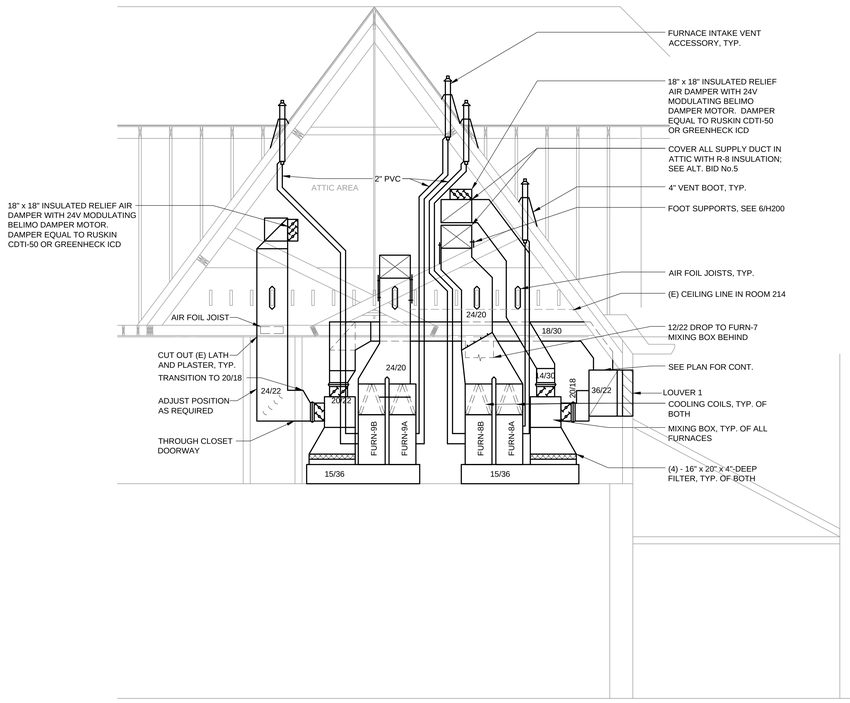

1 H202 REAR ELEVATION FURNACES 8A TO 9B
SCALE: 1/4" = 1'-0"

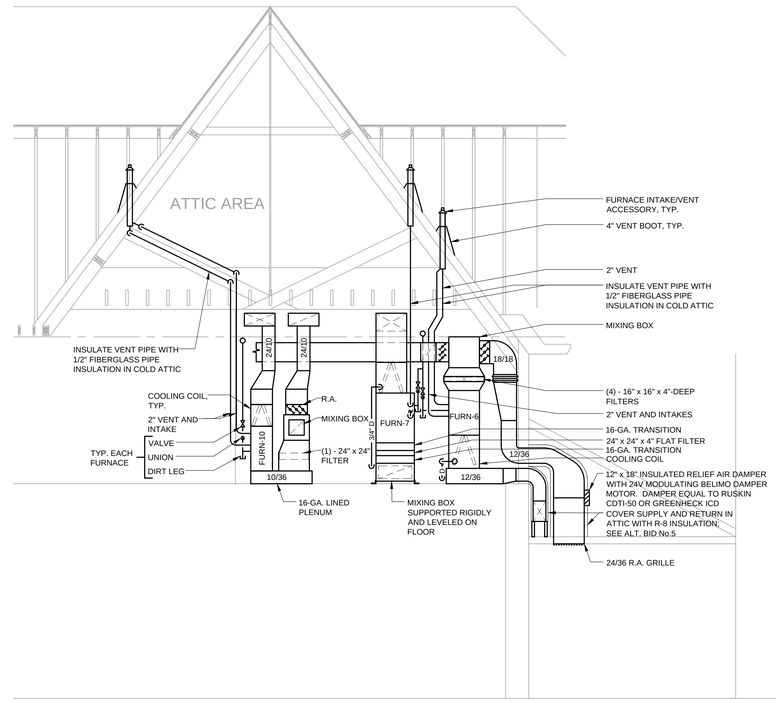

2 H202 ELEVATION FURNACES 6, 7 & 10
SCALE: 1/4" = 1'-0"

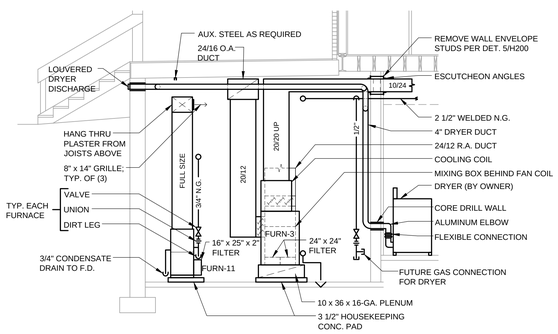

3 H202 ELEVATION FURNACES 3 & 11
SCALE: 1/4" = 1'-0"

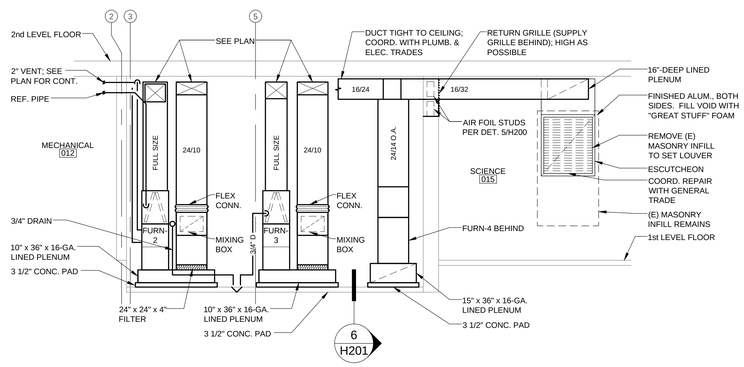

4 H202 SECTION THROUGH MECHANICAL 012
SCALE: 1/4" = 1'-0"

apace design
architects
engineers
designers
apacedesign
2122 Fairview Memorial Drive
Peoria Heights, Illinois 61616
t 309.685.4722 f 309.685.4784
www.apacedesign.com

HVAC Sections

Peoria PlayHouse Renovation
Peoria Park District
Glen Oak Park Pavillion
Peoria, Illinois 61603

NO.	ISSUE	DATE
1	Bidding Documents	03.19.14

EXPIRES 11.30.15
062-039301
LICENSED PROFESSIONAL ENGINEER OF ILLINOIS

DATE 03.19.14	PROJECT NO. 24905.02
DRAWN BY BAW	SHEET
CHECKED MAC	H202
APPROVED MAC	6 OF 9

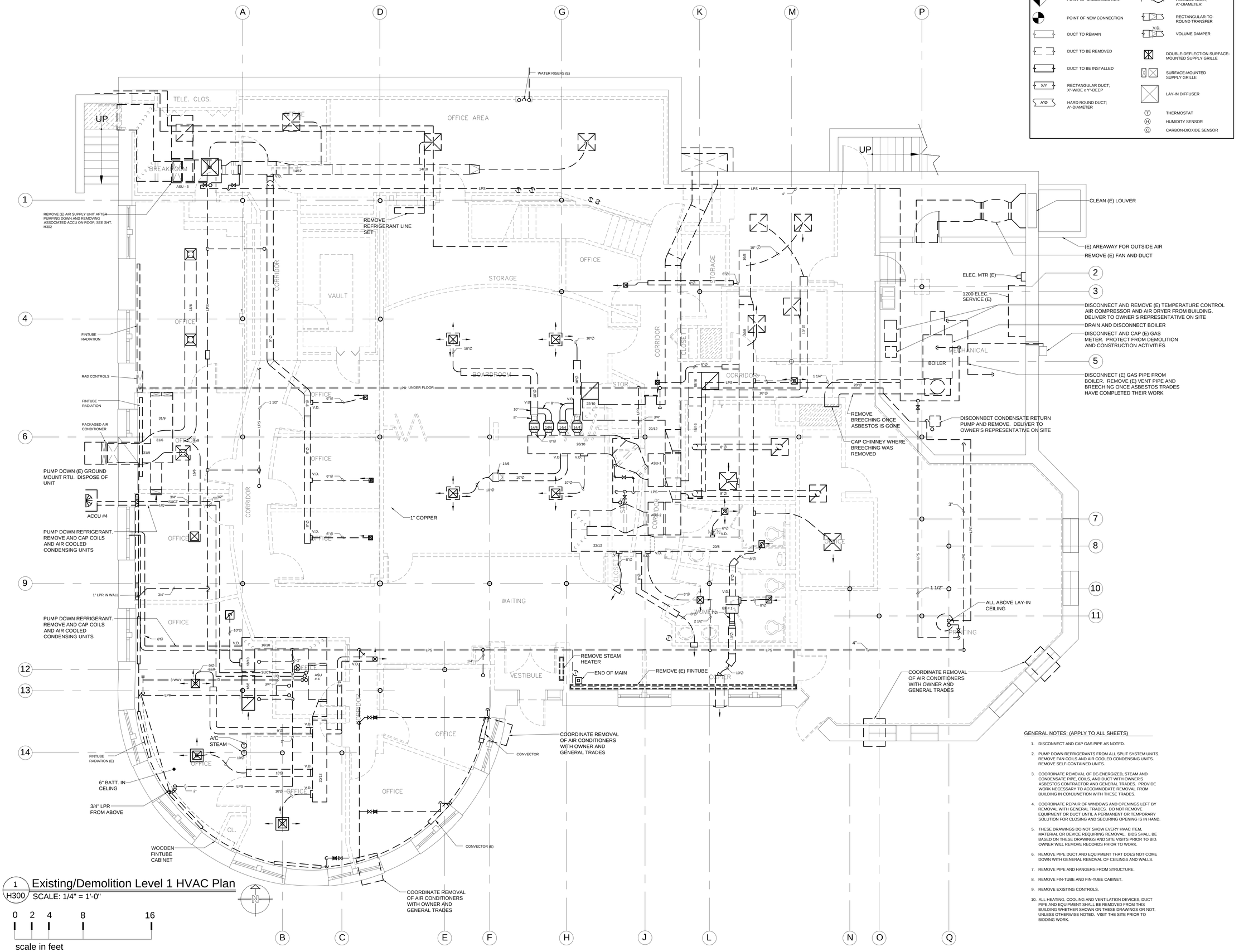

1 H300 Existing/Demolition Level 1 HVAC Plan
SCALE: 1/4" = 1'-0"

GENERAL NOTES: (APPLY TO ALL SHEETS)

1. DISCONNECT AND CAP GAS PIPE AS NOTED.
2. PUMP DOWN REFRIGERANTS FROM ALL SPLIT SYSTEM UNITS. REMOVE FAN COILS AND AIR COOLED CONDENSING UNITS. REMOVE SELF-CONTAINED UNITS.
3. COORDINATE REMOVAL OF DE-ENERGIZED, STEAM AND CONDENSATE PIPE, COILS, AND DUCT WITH OWNER'S ASBESTOS CONTRACTOR AND GENERAL TRADES. PROVIDE WORK NECESSARY TO ACCOMMODATE REMOVAL FROM BUILDING IN CONJUNCTION WITH THESE TRADES.
4. COORDINATE REPAIR OF WINDOWS AND OPENINGS LEFT BY REMOVAL WITH GENERAL TRADES. DO NOT REMOVE EQUIPMENT OR DUCT UNTIL A PERMANENT OR TEMPORARY SOLUTION FOR CLOSING AND SECURING OPENING IS IN HAND.
5. THESE DRAWINGS DO NOT SHOW EVERY HVAC ITEM, MATERIAL OR DEVICE REQUIRING REMOVAL. BIDS SHALL BE BASED ON THESE DRAWINGS AND SITE VISITS PRIOR TO BID. OWNER WILL REMOVE RECORDS PRIOR TO WORK.
6. REMOVE PIPE DUCT AND EQUIPMENT THAT DOES NOT COME DOWN WITH GENERAL REMOVAL OF CEILINGS AND WALLS.
7. REMOVE PIPE AND HANGERS FROM STRUCTURE.
8. REMOVE FIN-TUBE AND FIN-TUBE CABINET.
9. REMOVE EXISTING CONTROLS.
10. ALL HEATING, COOLING AND VENTILATION DEVICES, DUCT PIPE AND EQUIPMENT SHALL BE REMOVED FROM THIS BUILDING WHETHER SHOWN ON THESE DRAWINGS OR NOT, UNLESS OTHERWISE NOTED. VISIT THE SITE PRIOR TO BIDDING WORK.

apace design
architects engineers designers
apacedesign
2112 Early Wm Memorial Drive
Peoria, Illinois 61614
t.309.685.4723 f.309.685.4784
www.apacedesign.com

Existing/Demolition Level 1 HVAC Plan

Peoria PlayHouse Renovation
Peoria Park District
Glen Oak Park Pavillion
Peoria, Illinois 61603

NO.	ISSUE	DATE
1	Bidding Documents	03.19.14

EXPIRES 11.30.15
062-039301
LICENSED PROFESSIONAL ENGINEER OF ILLINOIS

DATE 03.19.14	PROJECT NO. 24905.02
DRAWN BY BAW	SHEET
CHECKED MAC	H300
APPROVED MAC	7 OF 9

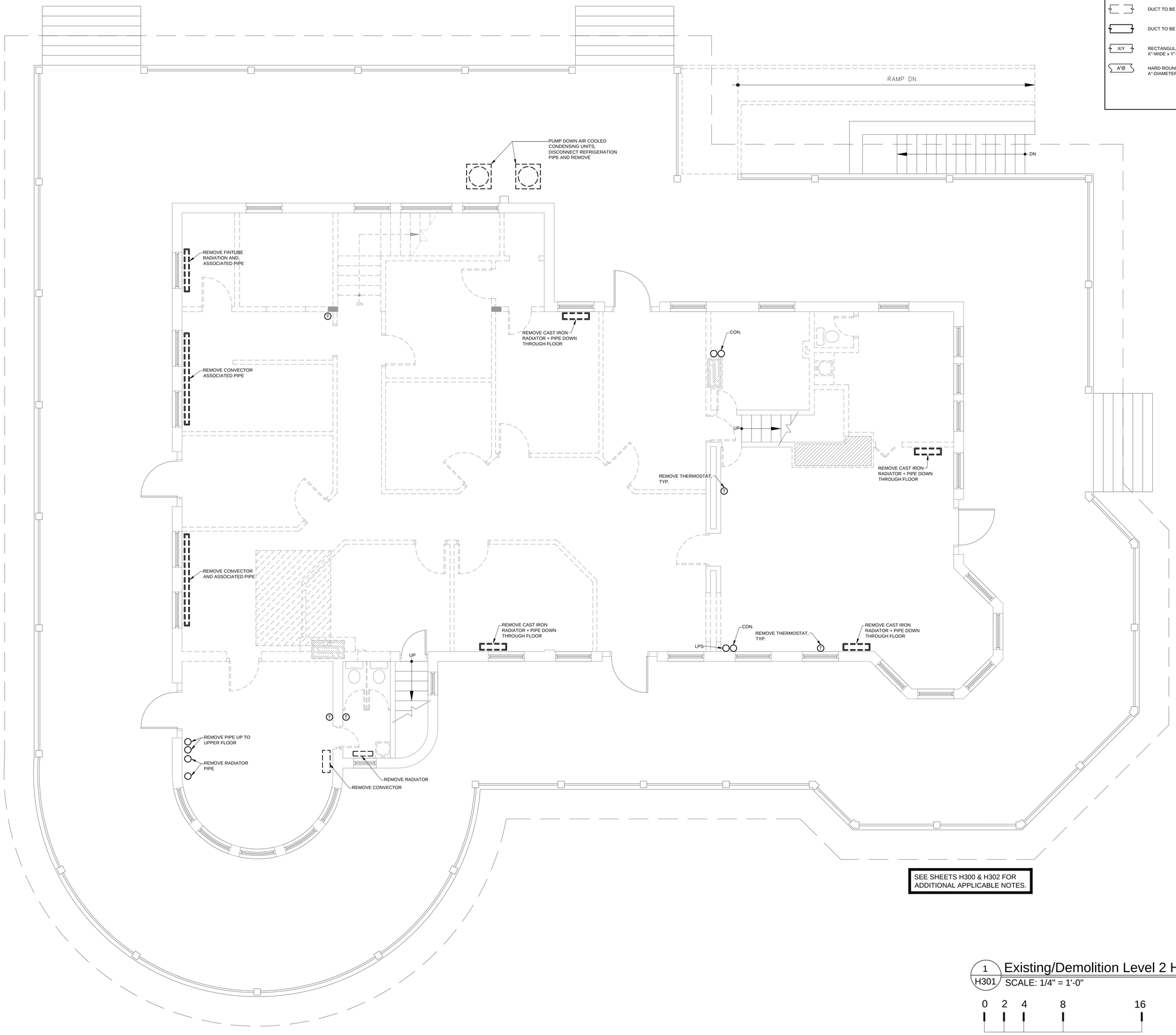

SEE SHEETS H300 & H302 FOR ADDITIONAL APPLICABLE NOTES.

SYMBOL / ABBREVIATION LIST

- POINT OF DISCONNECTION
- POINT OF NEW CONNECTION
- DUCT TO REMAIN
- DUCT TO BE REMOVED
- DUCT TO BE INSTALLED
- X/Y — RECTANGULAR DUCT; X"-WIDE x Y"-DEEP
- A"Ø — HARD ROUND DUCT; A"-DIAMETER
- A"Ø — FLEXIBLE DUCT; A"-DIAMETER
- RECTANGULAR-TO-ROUND TRANSFER
- V.D. — VOLUME DAMPER
- DOUBLE-DEFLECTION SURFACE-MOUNTED SUPPLY GRILLE
- SURFACE-MOUNTED SUPPLY GRILLE
- LAY-IN DIFFUSER
- T — THERMOSTAT
- H — HUMIDITY SENSOR
- C — CARBON-DIOXIDE SENSOR

1 / H301 Existing/Demolition Level 2 HVAC Plan
SCALE: 1/4" = 1'-0"

0 2 4 8 16
scale in feet

apaceDesign
architects
engineers
designers
apaceDesign
2112 East New Memorial Drive
Peoria Illinois 61614
1.309.685.4722 F.309.685.4784
www.apaceDesign.com

Existing/Demolition Level 2 HVAC Plan

Peoria PlayHouse Renovation
Peoria Park District
Glen Oak Park Pavillion
Peoria, Illinois 61603

NO.	ISSUE	DATE
1	Bidding Documents	03.19.14

EXPIRES 11.30.15
MARK A. CORDES
062-039301
LICENSED PROFESSIONAL ENGINEER OF ILLINOIS

DATE 03.19.14	PROJECT NO. 24905.02
DRAWN BY BAW	SHEET H301
CHECKED MAC	
APPROVED MAC	8 OF 9

SYMBOL / ABBREVIATION LIST

POINT OF DISCONNECTION	FLEXIBLE DUCT; A"-DIAMETER
POINT OF NEW CONNECTION	RECTANGULAR-TO-ROUND TRANSFER
DUCT TO REMAIN	VOLUME DAMPER
DUCT TO BE REMOVED	DOUBLE-DEFLECTION SURFACE-MOUNTED SUPPLY GRILLE
DUCT TO BE INSTALLED	SURFACE-MOUNTED SUPPLY GRILLE
RECTANGULAR DUCT; X"-WIDE x Y"-DEEP	LAY-IN DIFFUSER
HARD ROUND DUCT; A"-DIAMETER	THERMOSTAT
	HUMIDITY SENSOR
	CARBON-DIOXIDE SENSOR

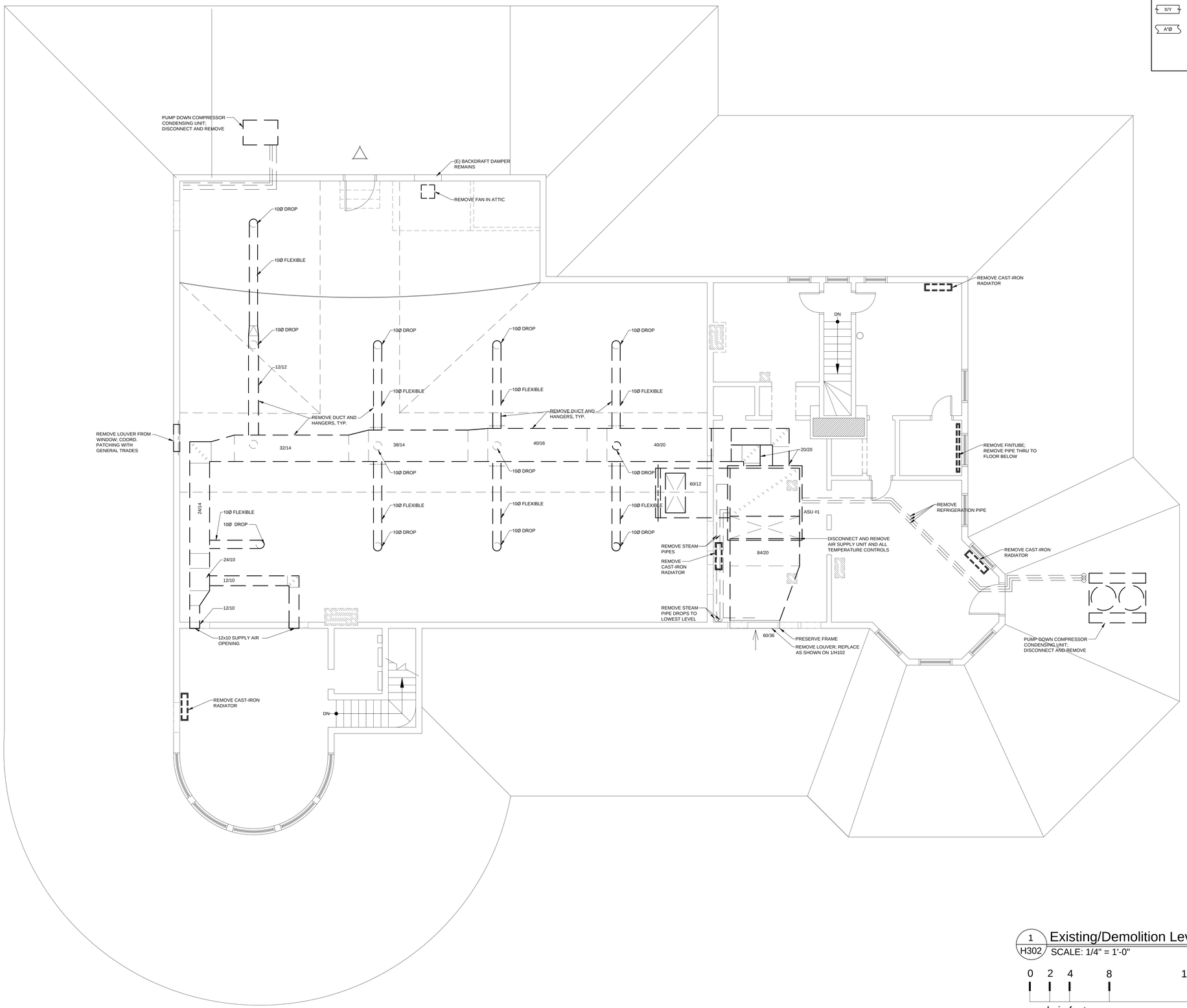

1 H302 Existing/Demolition Level 3 HVAC Plan
SCALE: 1/4" = 1'-0"

0 2 4 8 16
scale in feet

apaceDesign
2112 East Wyatt Memorial Drive
Phoenix, Illinois 61544
t 309.665.4722 f 309.665.4784
www.apaceDesign.com
architects
engineers
designers

Existing/Demolition Level 3 HVAC Plan

Peoria PlayHouse Renovation
Peoria Park District
Glen Oak Park Pavillion
Peoria, Illinois 61603

NO.	ISSUE	DATE
1	Bidding Documents	03.19.14

EXPIRES 11.30.15
062-039301
LICENSED PROFESSIONAL ENGINEER OF ILLINOIS

DATE 03.19.14	PROJECT NO. 24905.02
DRAWN BY BAW	SHEET H302
CHECKED MAC	
APPROVED MAC	9 OF 9

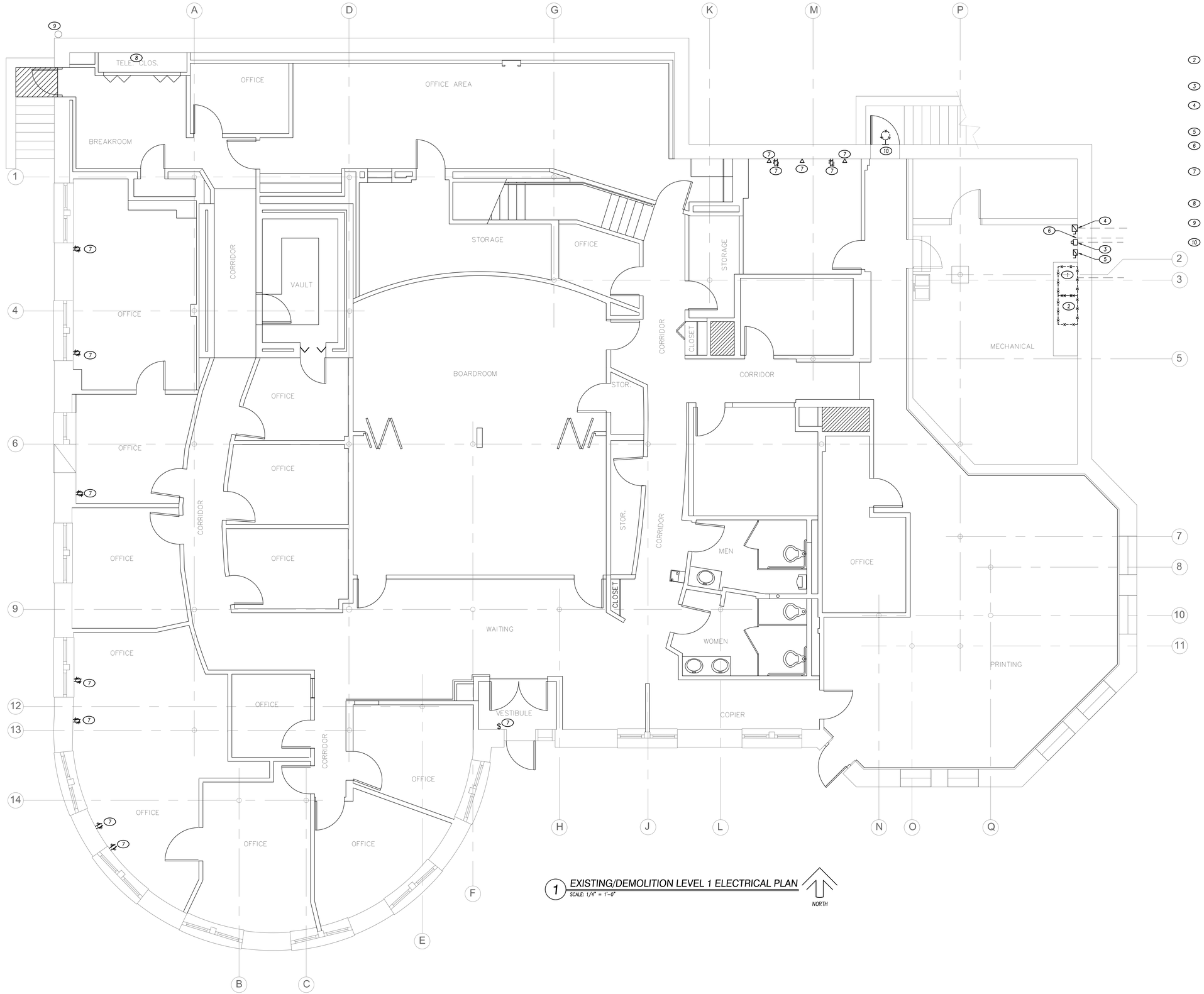

1 EXISTING/DEMOLITION LEVEL 1 ELECTRICAL PLAN
SCALE: 1/4" = 1'-0"

NORTH

KEYED ELECTRICAL NOTES

1. EXISTING SERVICE ENTRANCE EQUIPMENT TO BE PROTECTED AND USED TO PROVIDE TEMPORARY POWER, AS NEEDED PRIOR TO NEW PERMANENT EQUIPMENT INSTALLATION. DISCONNECT ALL POWER AT MAIN SWITCH PRIOR TO DEMOLITION. LOCK-OUT MAIN SWITCH DURING DEMOLITION PHASE OF WORK. REMOVE MAIN SWITCHBOARD TO ALLOW INSTALLATION OF NEW "MDP". NEW METER AND CT CABINET SHALL BE LOCATED OUTSIDE OF BUILDING. COORDINATE ALL WORK WITH AMEREN AND WITH SUB-FED REMOTE PARK DISTRICT FACILITIES. ALL ELECTRICAL DEMOLITION, OTHER THAN WHAT IS SHOWN, SHALL BE BY GENERAL TRADES.
2. EXISTING 'MDP' TO BE REMOVED – COORDINATE WITH GENERAL TRADES FOR TEMPORARY POWER REQUIREMENTS PRIOR TO NEW SERVICE EQUIPMENT INSTALLATION.
3. EXISTING METER CABINET TO BE RELOCATED OUTSIDE WITH NEW CT CABINET. SEE REVISED LEVEL 2 POWER PLAN.
4. 100 AMP FUSED DISCONNECT TO BE REMOVED. DISCONNECT SERVES UNDERGROUND FEED TO SHELTER AND SHUFFLEBOARD COURT. PROTECT FEEDER FOR RECONNECTION TO NEW 'MDP' BREAKER.
5. EXISTING 'EMERGENCY' POWER FUSED DISCONNECT SWITCH TO BE REMOVED.
6. EXISTING UNDERGROUND FEED TO SITE LIGHTING TO BE DISCONNECTED FROM EXISTING 'MDP' FOR RECONNECTION TO NEW 'MDP'. SEE PANEL SCHEDULES AND REVISED POWER PLAN.
7. EXISTING DEVICE IS IN A WALL PLANNED TO REMAIN. REMOVE DEVICE AND ASSOCIATED WIRING. PROVIDE BLANK COVER OVER DEVICE BOX THAT IS NOT BEING RE-USED FOR NEW DEVICE. SEE REVISED LEVEL 1 POWER PLAN FOR NEW DEVICE LOCATIONS.
8. COORDINATE DISCONNECTION OF EXISTING TELEPHONE SERVICE WITH TELEPHONE UTILITY COMPANY.
9. EXISTING TELEPHONE UTILITY PEDESTAL TO REMAIN. PROTECT FROM DAMAGE DURING PROJECT.
10. EXISTING FIXTURE SHALL BE REMOVED LEAVING OUTLET BOX FOR INSTALLATION OF NEW FIXTURE. SEE REVISED LEVEL 1 LIGHTING.

NOTE:
EXISTING SERVICE ENTRANCE EQUIPMENT TO BE PROTECTED AND USED TO PROVIDE TEMPORARY POWER, AS NEEDED PRIOR TO NEW PERMANENT EQUIPMENT INSTALLATION. DISCONNECT ALL POWER AT MAIN SWITCH PRIOR TO DEMOLITION. LOCK-OUT MAIN SWITCH DURING DEMOLITION PHASE OF WORK. REMOVE MAIN SWITCHBOARD TO ALLOW INSTALLATION OF NEW "MDP". NEW METER AND CT CABINET SHALL BE LOCATED OUTSIDE OF BUILDING. COORDINATE ALL WORK WITH AMEREN AND WITH SUB-FED REMOTE PARK DISTRICT FACILITIES. ALL ELECTRICAL DEMOLITION, OTHER THAN WHAT IS SHOWN, SHALL BE BY GENERAL TRADES.

NOTE:
POWER AT MAIN SERVICE DISCONNECT SHALL BE LOCKED "OFF" FOR ALL INTERIOR DEMOLITION WORK. EXISTING ELECTRICAL EQUIPMENT, DEVICES, CONDUITS, WIRING, AND CABLES SHALL BE REMOVED AS PART OF GENERAL DEMOLITION, BY GENERAL TRADES, EXCEPT AS NOTED.

apaceDesign
2113 Main St. Historical Data
Peoria, Illinois 61606-2134
(309) 673-2223
www.apacedesign.com
architects engineers designers
apace Design

KEITH ENGINEERING DESIGN, INC.
208 S. FIRST ST
PEORIA, IL 61605
FAX 309-674-0063

EXISTING/DEMOLITION LEVEL 1 ELECTRICAL PLAN

Peoria PlayHouse Children's Museum
Peoria Park District
Glen Oak Park Pavillion
Peoria, IL 61603

LICENSED PROFESSIONAL ENGINEER
BRIAN R. KEITH
062-049506
EXPIRES: 04/30/15
STATE OF ILLINOIS

DATE: 03/19/2014

NO.	ISSUE	DATE
1	Bidding Documents	3.19.14

DATE 3.19.2014	PROJECT NO. 24905.02
DRAWN BY TDC	SHEET
CHECKED TDC	E101
APPROVED BRK	1 OF 20

CODE:

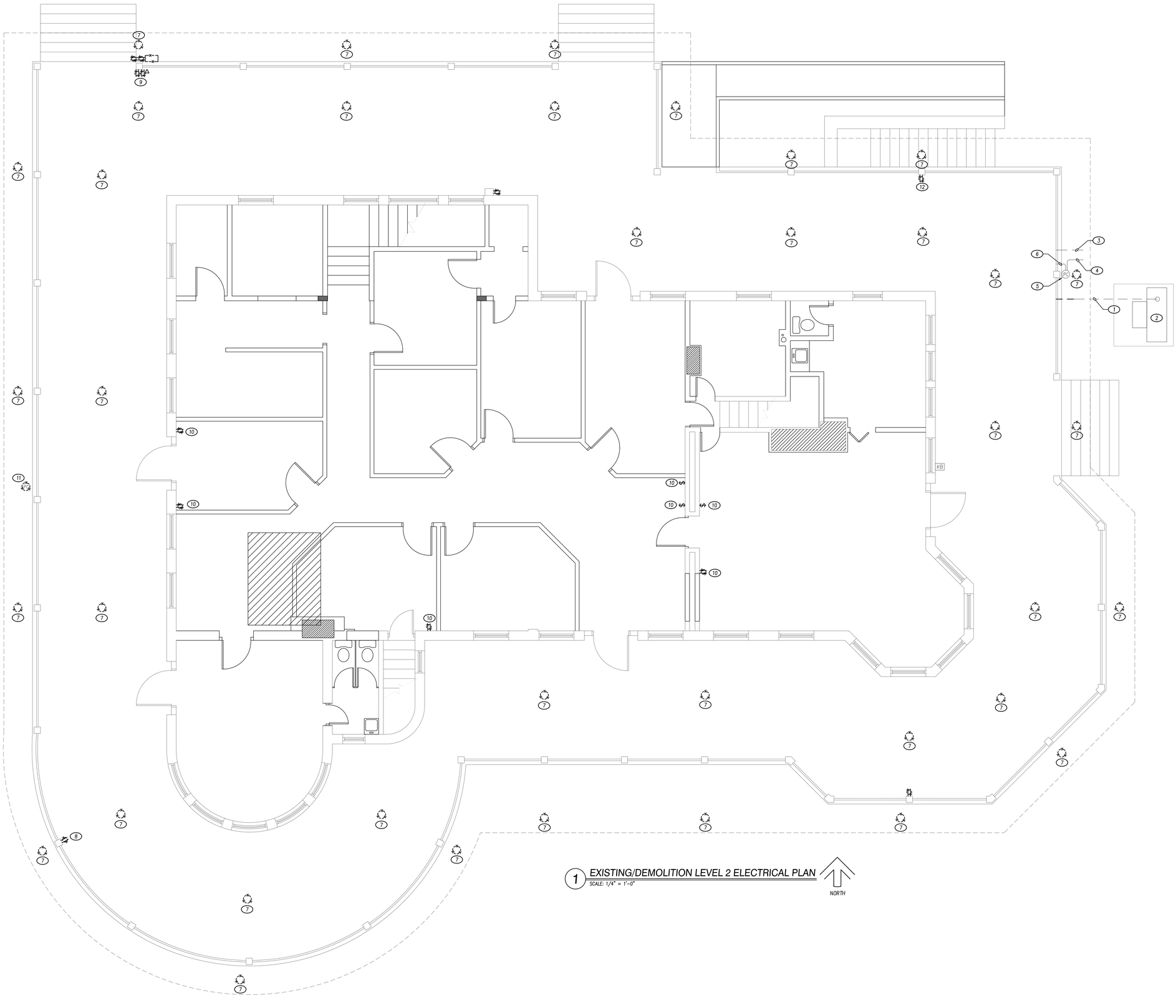

1 EXISTING/DEMOLITION LEVEL 2 ELECTRICAL PLAN
SCALE: 1/4" = 1'-0"

NORTH

KEYED ELECTRICAL NOTES

1. EXISTING UNDERGROUND SECONDARY CONDUCTORS TO REMAIN, BUT BE INTERCEPTED FOR RE-ROUTE TO NEW CT CABINET. SEE REVISED LEVEL 2 POWER PLAN AND ONE-LINE AND DISTRIBUTION DIAGRAMS.
2. EXISTING PAD MOUNTED AMEREN TRANSFORMER TO REMAIN.
3. EXISTING UNDERGROUND FEEDER TO SHUFFLEBOARD SHELTER, TO REMAIN. PROTECT FROM DAMAGE DURING PROJECT. LOCATE AND MARK ACTUAL ROUTE.
4. EXISTING UNDERGROUND SITE/LANDSCAPE LIGHTING CIRCUIT TO REMAIN. PROTECT FROM DAMAGE DURING PROJECT. LOCATE AND MARK ACTUAL ROUTE.
5. EXISTING SITE/LANDSCAPE LIGHTING PHOTOCELL CONTROL TO REMAIN. PROTECT FROM DAMAGE DURING PROJECT.
6. DISCONNECT EXISTING SITE/LANDSCAPE LIGHTING CIRCUIT FROM 'MDP' AT INTERIOR FOR RECONNECTION TO NEW 'MDP'. SEE LEVEL 1 DEMOLITION.
7. EXISTING SURFACE MOUNTED FIXTURE TO BE REMOVED FOR REPLACEMENT BY NEW FIXTURE. SEE REVISED LIGHTING PLANS.
8. REMOVE EXISTING DEVICE AND RETAIN CONDUIT FOR CONDUCTOR ROUTE FOR NEW DEVICE. SEE REVISED POWER PLAN
9. REMOVE ALL EXISTING DEVICES AND RETAIN CONDUIT FOR CONDUCTOR ROUTE FOR NEW DEVICE. SEE REVISED POWER PLAN.
10. EXISTING DEVICE IS IN A WALL PLANNED TO REMAIN. REMOVE DEVICE AND ASSOCIATED WIRING. PROVIDE BLANK COVER OVER DEVICE BOX THAT IS NOT BEING RE-USED FOR NEW DEVICE. SEE REVISED LEVEL 2 POWER PLAN FOR NEW DEVICE LOCATIONS.
11. REMOVE EXISTING PHOTOCELL, OUTLET BOX, AND CORD/PLUG EXTENSIONS UNDER ROOF OVERHANG.
12. REMOVE DEVICE AND ASSOCIATED SURFACE CONDUIT.

NOTE:
POWER AT MAIN SERVICE DISCONNECT SHALL BE LOCKED "OFF" FOR ALL INTERIOR DEMOLITION WORK. EXISTING ELECTRICAL EQUIPMENT, DEVICES, CONDUITS, WIRING, AND CABLES SHALL BE REMOVED AS PART OF GENERAL DEMOLITION, BY GENERAL TRADES, EXCEPT AS NOTED.

apace Design
spaceDesign
1113 SW Washington Avenue Peoria
Illinois 61602-1513
309.673.1551
www.spaceDesign.com
architecture interiors designers

KED
KEITH ENGINEERING DESIGN, INC.
208 S. FIRST ST
PEORIA, IL 61605
FAX 309-674-0063

EXISTING/DEMOLITION LEVEL 2 ELECTRICAL PLAN

Peoria PlayHouse Children's Museum
Peoria Park District
Glen Oak Park Pavillion
Peoria, IL 61603

LICENSED PROFESSIONAL ENGINEER BRIAN K. KEITH 062-050306 EXPIRES 30NOV15 STATE OF ILLINOIS

DATE: 03/19/2014

NO.	ISSUE	DATE
1	Bidding Documents	3.19.14

DATE 3.19.2014	PROJECT NO. 24905.02
DRAWN BY TDC	SHEET
CHECKED TDC	E102
APPROVED BRK	2 OF 20

CODE

KEYED ELECTRICAL NOTES

1. OVERHEAD FEED TO REMOTE BALL DIAMOND FACILITY. FEEDER ORIGINATES IN LEVEL 3 ELECTRICAL CLOSET. OVERHEAD DROP AND CONDUIT/WIRING ROUTED TO DISCONNECT SWITCH SHALL REMAIN. SEE NOTE #3 BELOW.
2. OVERHEAD FEED TO REMOTE BOAT HOUSE FACILITY AT LAGOON FEEDER ORIGINATES IN LEVEL 3 ELECTRICAL CLOSET. OVERHEAD DROP AND CONDUIT/WIRING ROUTED TO DISCONNECT SWITCH SHALL REMAIN. SEE NOTE #3 BELOW.
3. REMOVE ALL ELECTRICAL EQUIPMENT IN THIS ROOM. DISCONNECT SWITCHES SERVING FEEDERS TO REMOTE BALL DIAMOND AND BOAT HOUSE FACILITIES SHALL BE REMOVED WITH FEEDER CONDUCTORS REMAINING FOR REFEED TO NEW PANEL 'MDP'. SEE REVISED ONE-LINE AND DISTRIBUTION DIAGRAMS.
4. EXISTING ANTENNA TOWER TO REMAIN. PROTECT FROM DAMAGE DURING PROJECT.

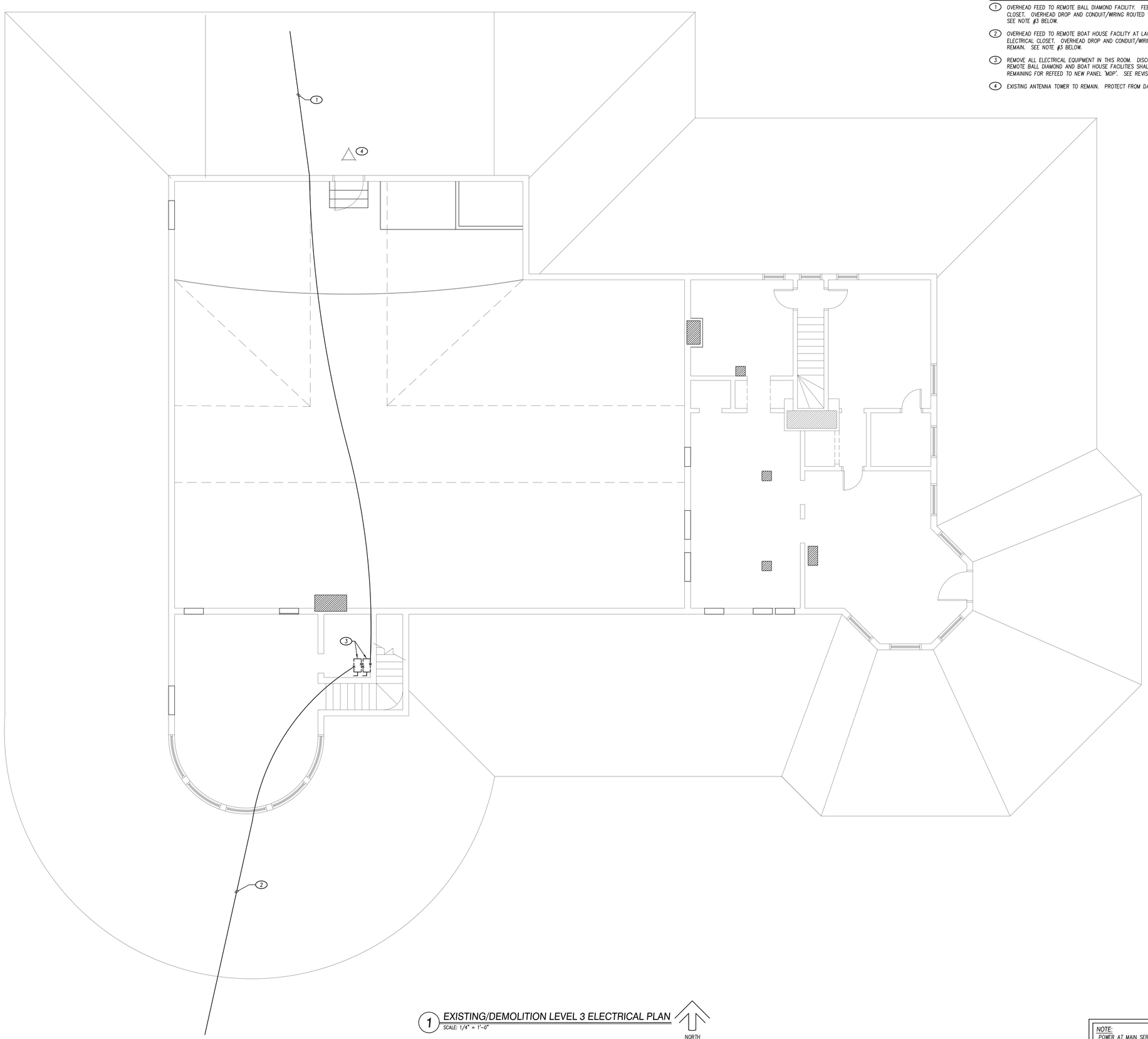

1 EXISTING/DEMOLITION LEVEL 3 ELECTRICAL PLAN
SCALE: 1/4" = 1'-0"

NORTH

NOTE:
POWER AT MAIN SERVICE DISCONNECT SHALL BE LOCKED "OFF" FOR ALL INTERIOR DEMOLITION WORK. EXISTING ELECTRICAL EQUIPMENT, DEVICES, CONDUITS, WIRING, AND CABLES SHALL BE REMOVED AS PART OF GENERAL DEMOLITION, BY GENERAL TRADES, EXCEPT AS NOTED.

apaceDesign
2113 Lake Ave. Historical Dist.
Peoria, Illinois 61614-4704
(309) 692-2223
www.apaceDesign.com
architects engineers designers
apaceDesign

KEITH ENGINEERING DESIGN, INC.
208 S. FIRST ST.
PEORIA, IL 61550
PH. 309-674-1000

EXISTING/DEMOLITION LEVEL 3 ELECTRICAL PLAN

Peoria PlayHouse Children's Museum
Peoria Park District
Glen Oak Park Pavillion
Peoria, IL 61603

LICENSED PROFESSIONAL ENGINEER
BRIAN R. KEITH
062-049596
EXPIRES 11/30/2015
STATE OF ILLINOIS

DATE: 03/19/2014

NO.	ISSUE	DATE
1	Bidding Documents	3.19.14

DATE 3.19.2014	PROJECT NO. 24905.02
DRAWN BY TDC	SHEET
CHECKED TDC	E103
APPROVED BRK	3 OF 20

CODE:

KEYED ELECTRICAL NOTES

1. COMMON BRANCH CIRCUIT SERVED BY MULTIPLE LIGHTING CONTROL PANEL RELAYS. SEE LCP SCHEDULE AND LCP RELAY NUMBERS AT FIXTURES.
2. ROUTE TRACK LIGHTING CIRCUIT(S) THROUGH INDICATED RELAY(S) AND POWER LIMITING BREAKER(S). POWER SHALL BE LIMITED TO 600 WATTS FOR EACH TRACK LIGHTING RELAY.
3. MOUNT FIXTURE ABOVE DOOR WITH MAIN POWER CONNECTION TO EXTERIOR LIGHTING CIRCUIT, CONTROLLED BY PHOTOCELL. MAKE EMERGENCY BATTERY BACKUP CONNECTION TO INTERIOR BACKUP UNIT. SEE FIXTURE SCHEDULE.
4. ALL INSTALLATIONS IN THE ELEVATOR PIT SHALL BE RATED NEMA 4 AND SHALL BE WEATHER TIGHT. COORDINATE ALL WORK WITH ELEVATOR SUPPLIER AND ELEVATOR INSPECTOR PRIOR TO ROUGH-IN.
5. MOUNT LUMINAIRE IN ELEVATOR PIT. COORDINATE LOCATION PRIOR TO ROUGH-IN.
6. PROVIDE NEMA 4 WEATHER PROOF COVER. SWITCH SHALL BE LOCATED ADJACENT TO PIT LADDER. COORDINATE EXACT LOCATION PRIOR TO ROUGH-IN.

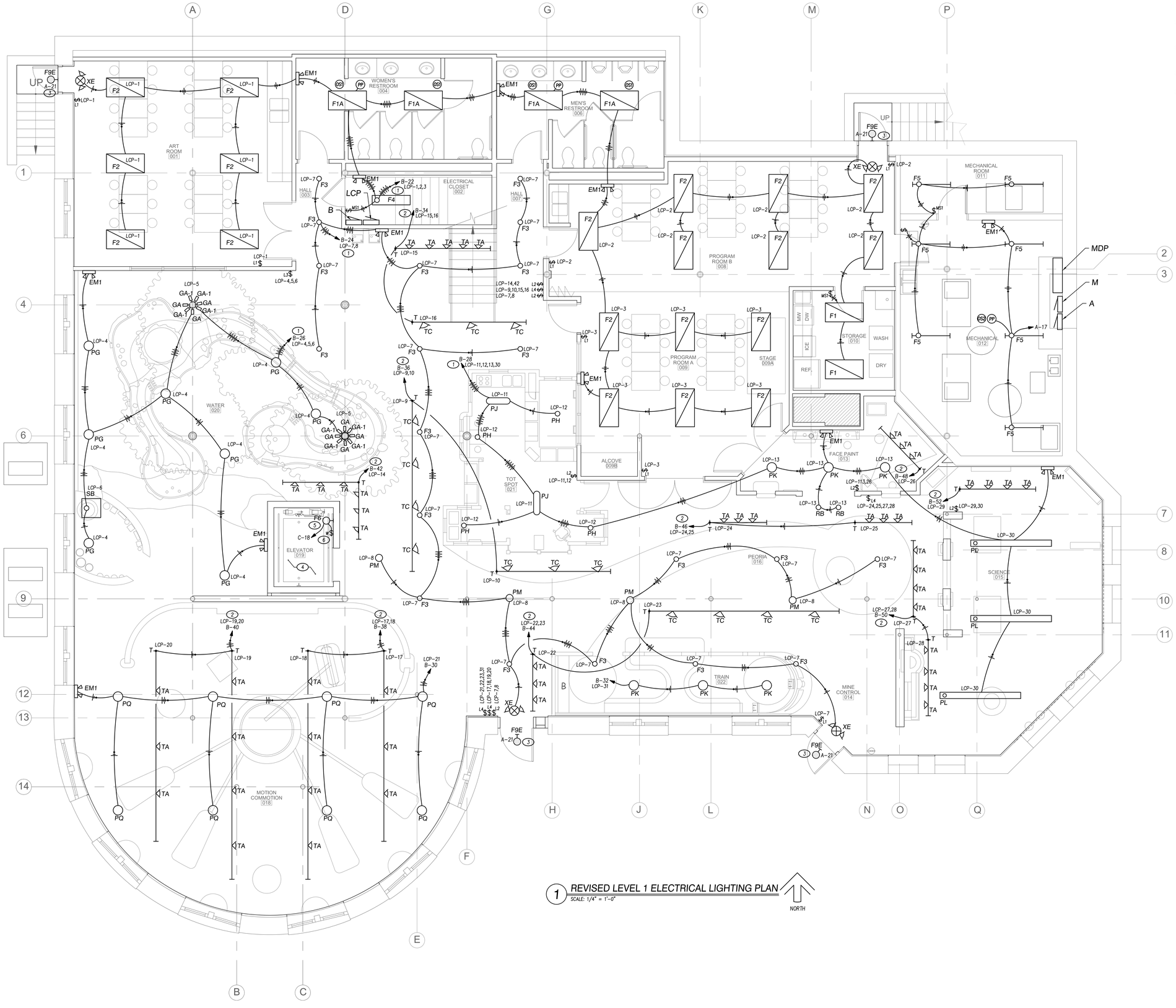

1 REVISED LEVEL 1 ELECTRICAL LIGHTING PLAN
SCALE: 1/4" = 1'-0"

NORTH

apaceDesign
7113 Lake Ave. Associated Drive
Peoria, Illinois 61614-7334
309.693.9000
www.apaceDesign.com

KEITH ENGINEERING DESIGN, INC.
208 S. FIRST ST.
NORTON, IL 61560
PH. 309.274.5000

REVISED LEVEL 1 ELECTRICAL LIGHTING PLAN

Peoria PlayHouse Children's Museum
Peoria Park District
Glen Oak Park Pavillion
Peoria, IL 61603

LICENSED PROFESSIONAL ENGINEER BRIAN K. KEITH 062-050506 EXPIRES 11/30/2015 STATE OF ILLINOIS

Brian K. Keith

DATE: 03/19/2014

NO.	ISSUE	DATE
1	Bidding Documents	3.19.14

DATE 3.19.2014	PROJECT NO. 24905.02
DRAWN BY DRJ/TDC	SHEET
CHECKED TDC	E111
APPROVED BRK	4 OF 20

CODE

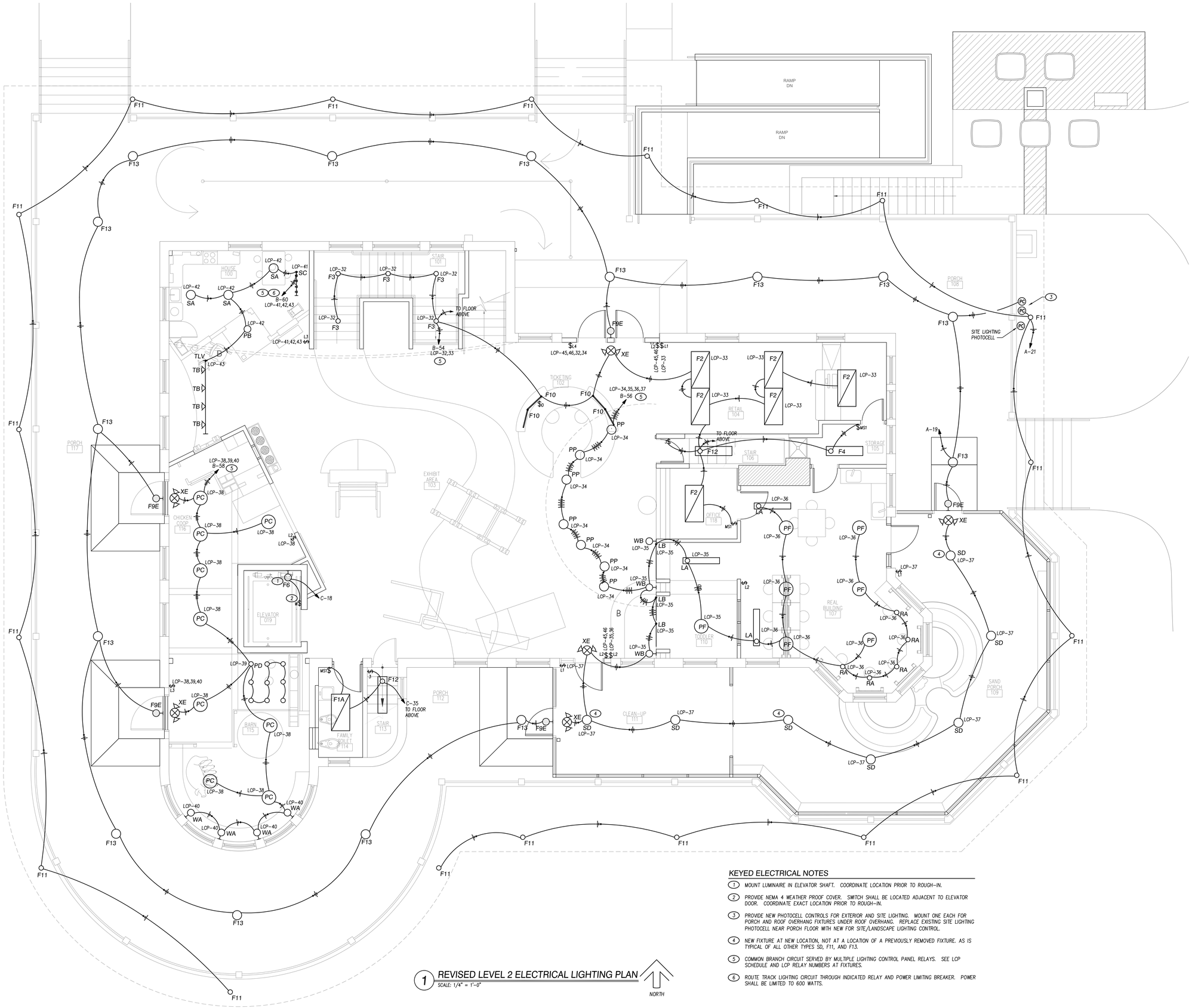

1 REVISED LEVEL 2 ELECTRICAL LIGHTING PLAN
SCALE: 1/4" = 1'-0"

KEYED ELECTRICAL NOTES

1. MOUNT LUMINAIRE IN ELEVATOR SHAFT. COORDINATE LOCATION PRIOR TO ROUGH-IN.
2. PROVIDE NEMA 4 WEATHER PROOF COVER. SWITCH SHALL BE LOCATED ADJACENT TO ELEVATOR DOOR. COORDINATE EXACT LOCATION PRIOR TO ROUGH-IN.
3. PROVIDE NEW PHOTOCELL CONTROLS FOR EXTERIOR AND SITE LIGHTING. MOUNT ONE EACH FOR PORCH AND ROOF OVERHANG FIXTURES UNDER ROOF OVERHANG. REPLACE EXISTING SITE LIGHTING PHOTOCELL NEAR PORCH FLOOR WITH NEW FOR SITE/LANDSCAPE LIGHTING CONTROL.
4. NEW FIXTURE AT NEW LOCATION, NOT AT A LOCATION OF A PREVIOUSLY REMOVED FIXTURE. AS IS TYPICAL OF ALL OTHER TYPES SD, F11, AND F13.
5. COMMON BRANCH CIRCUIT SERVED BY MULTIPLE LIGHTING CONTROL PANEL RELAYS. SEE LCP SCHEDULE AND LCP RELAY NUMBERS AT FIXTURES.
6. ROUTE TRACK LIGHTING CIRCUIT THROUGH INDICATED RELAY AND POWER LIMITING BREAKER. POWER SHALL BE LIMITED TO 600 WATTS.

apace Design
spaceDesign
2113 Main Ste. Historical Dists
Peoria, Illinois 61606-1304
309.673.1304
www.spaceDesign.com
architecture interiors designers

KED
KEITH ENGINEERING DESIGN, INC.
PHONE: 309-674-0000
FAX: 309-674-0003
208 S. FIRST ST.
PEORIA, IL 61550

REVISED LEVEL 2 ELECTRICAL LIGHTING PLAN

Peoria PlayHouse Children's Museum
Peoria Park District
Glen Oak Park Pavillion
Peoria, IL 61603

LICENSED PROFESSIONAL ENGINEER BRIAN R. KEITH 062-045036 PEORIA, ILLINOIS STATE OF ILLINOIS

DATE: 03/19/2014

NO.	ISSUE	DATE
1	Bidding Documents	3.19.14

DATE 3.19.2014	PROJECT NO. 24905.02
DRAWN BY DRJ/TDC	SHEET
CHECKED TDC	E112
APPROVED BRK	5 OF 20

CODE

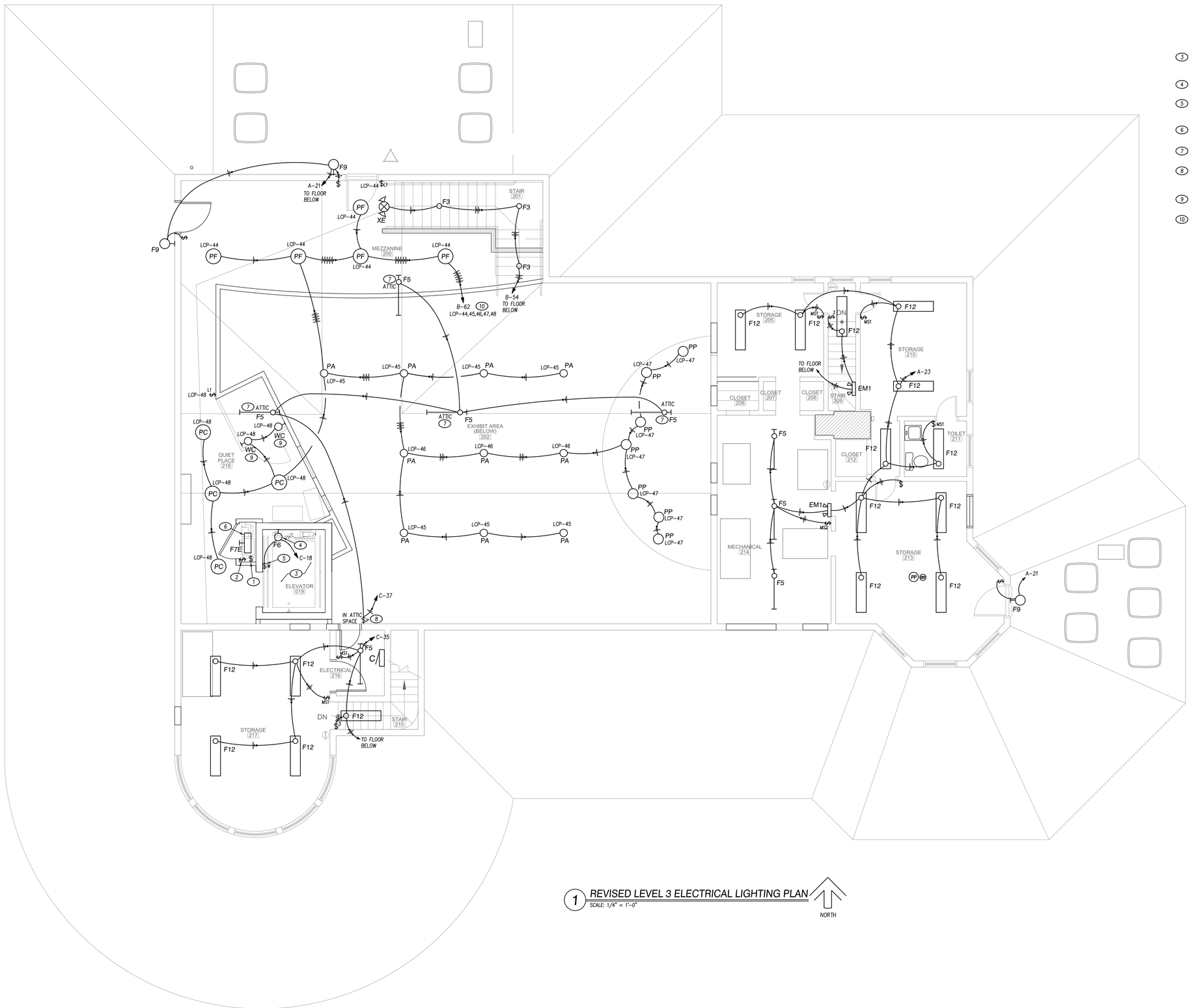

1 REVISED LEVEL 3 ELECTRICAL LIGHTING PLAN
SCALE: 1/4" = 1'-0"

KEYED ELECTRICAL NOTES

1. PROVIDE A DEDICATED 15-AMPERE, 120-VOLT FUSED, LOCKABLE SERVICE WITH GROUND CONNECTED TO THE ELEVATOR CONTROL CABINET FOR CAR LIGHTING.
2. FURNISH AND INSTALL A TWO POLE FUSIBLE SWITCH THAT IS LOCKABLE IN THE OFF POSITION. ROUTE THE LIGHTING CIRCUIT AND RECEPTACLE CIRCUIT THROUGH THE SWITCH SO THAT ALL 120-VOLT POWER IN THE ROOM CAN BE DISCONNECTED AND LOCKED IN THE "OFF" POSITION. COORDINATE THE EXACT LOCATION OF THE SWITCH WITH THE AUTHORITY HAVING JURISDICTION. ROUTE CONDUCTORS IN CONDUIT TO ELEVATOR CONTROLLER PER ELEVATOR MANUFACTURER'S RECOMMENDATIONS. SEE PLAN 2/E111 FOR 120 VOLT CIRCUIT CONNECTION.
3. ALL INSTALLATIONS IN THE ELEVATOR PIT SHALL BE RATED NEMA 4 AND SHALL BE WEATHER TIGHT. COORDINATE ALL WORK WITH ELEVATOR SUPPLIER AND ELEVATOR INSPECTOR PRIOR TO ROUGH-IN.
4. MOUNT LUMINAIRE IN ELEVATOR SHAFT. COORDINATE LOCATION PRIOR TO ROUGH-IN.
5. PROVIDE NEMA 4 WEATHER PROOF COVER. SWITCH SHALL BE LOCATED ADJACENT TO ELEVATOR DOOR. COORDINATE EXACT LOCATION PRIOR TO ROUGH-IN.
6. CONNECT INTEGRAL EMERGENCY BATTERY PACK TO UNSWITCHED PORTION OF LIGHTING CIRCUIT.
7. HANG FIXTURES FROM SLOPED ROOF STRUCTURE AT APPROXIMATELY 8'-0" ABOVE LEVEL 3 CEILING JOISTS/ATTIC WALKWAY.
8. PROVIDE LIGHTING CONTROL SWITCH FOR ATTIC LIGHTING. LOCATE NEAR ATTIC ACCESS. PROVIDE SWITCH WITH PILOT LIGHT (ON WHEN LIGHTING IS OFF).
9. MULTIPLE FIXTURES ARE MOUNTED ON ALTERNATING SIDES OF CLIMBING AREA. REFER TO DETAILS AND NOTES ON EXHIBIT LIGHTING SHEETS.
10. COMMON BRANCH CIRCUIT SERVED BY MULTIPLE LIGHTING CONTROL PANEL RELAYS. SEE LCP SCHEDULE AND LCP RELAY NUMBERS AT FIXTURES.

apaceDesign
2113 Lake Park Avenue/Second Floor
Lake Park Plaza, Suite 2
Phone: 309.693.4000
www.apaceDesign.com
architects designers
apace Design

KEITH ENGINEERING DESIGN, INC.
208 S. FIRST ST.
PEORIA, IL 61550
PH. 309.674.1000
FAX 309.674.0003

REVISED LEVEL 3 ELECTRICAL LIGHTING PLAN

Peoria PlayHouse Children's Museum
Peoria Park District
Glen Oak Park Pavillion
Peoria, IL 61603

LICENSED PROFESSIONAL ENGINEER BRIAN R. KEITH 062-058806 EXPIRES: 12/31/2015 STATE OF ILLINOIS

Brian R. Keith

DATE: 03/19/2014

NO.	ISSUE	DATE
1	Bidding Documents	3.19.14

DATE 3.19.2014	PROJECT NO. 24905.02
DRAWN BY DRJ	SHEET
CHECKED TDC	E113
APPROVED BRK	6 OF 20

CODE

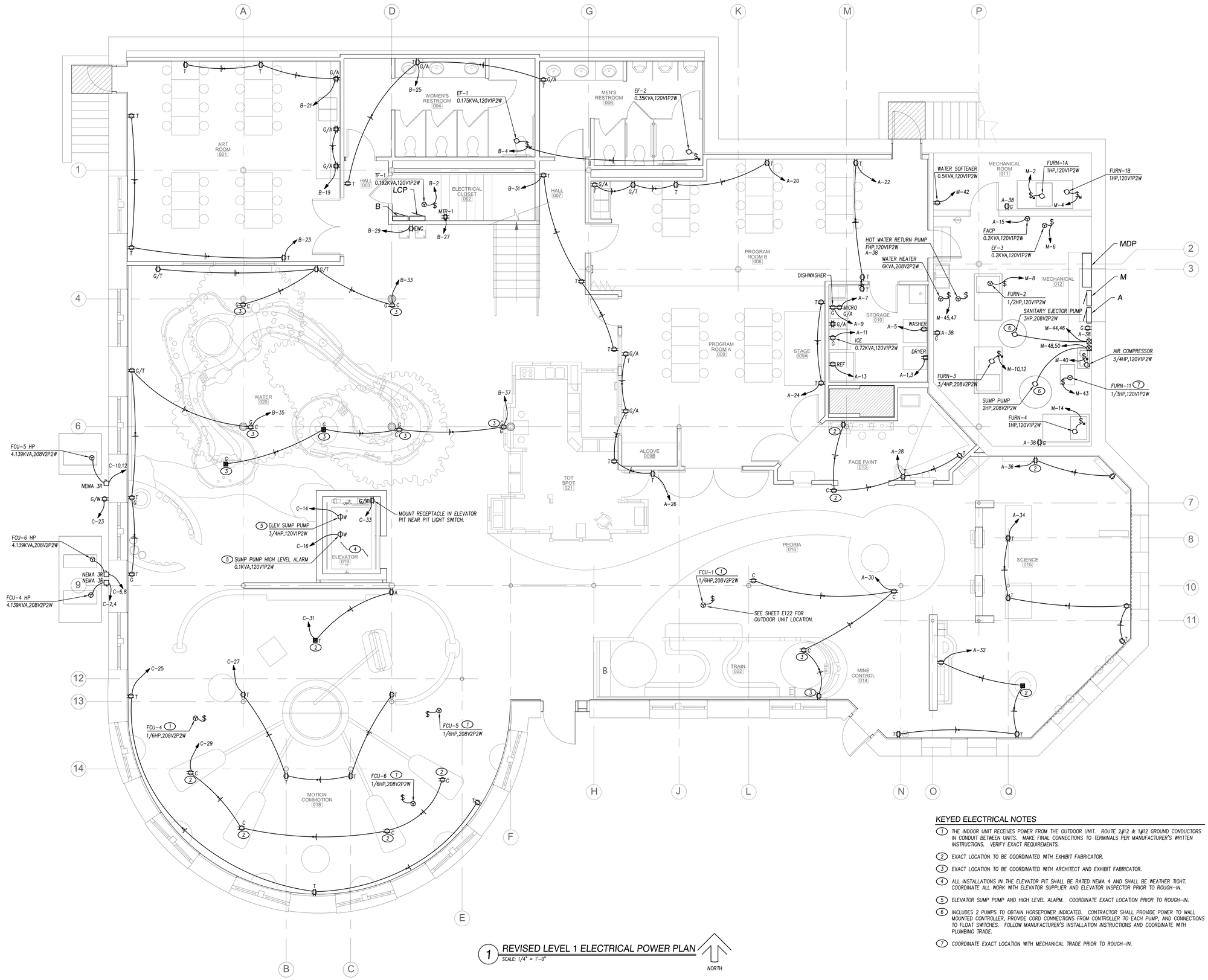

1 REVISED LEVEL 1 ELECTRICAL POWER PLAN
SCALE: 1/4" = 1'-0"

NORTH

KEYED ELECTRICAL NOTES

1. THE INDOOR UNIT RECEIVES POWER FROM THE OUTDOOR UNIT. ROUTE 2#12 & 1#12 GROUND CONDUCTORS IN CONDUIT BETWEEN UNITS. MAKE FINAL CONNECTIONS TO TERMINALS PER MANUFACTURER'S WRITTEN INSTRUCTIONS. VERIFY EXACT REQUIREMENTS.
2. EXACT LOCATION TO BE COORDINATED WITH EXHIBIT FABRICATOR.
3. EXACT LOCATION TO BE COORDINATED WITH ARCHITECT AND EXHIBIT FABRICATOR.
4. ALL INSTALLATIONS IN THE ELEVATOR PIT SHALL BE RATED NEMA 4 AND SHALL BE WEATHER TIGHT. COORDINATE ALL WORK WITH ELEVATOR SUPPLIER AND ELEVATOR INSPECTOR PRIOR TO ROUGH-IN.
5. ELEVATOR SUMP PUMP AND HIGH LEVEL ALARM. COORDINATE EXACT LOCATION PRIOR TO ROUGH-IN.
6. INCLUDES 2 PUMPS TO OBTAIN HORSEPOWER INDICATED. CONTRACTOR SHALL PROVIDE POWER TO WALL MOUNTED CONTROLLER, PROVIDE CORD CONNECTIONS FROM CONTROLLER TO EACH PUMP, AND CONNECTIONS TO FLOAT SWITCHES. FOLLOW MANUFACTURER'S INSTALLATION INSTRUCTIONS AND COORDINATE WITH PLUMBING TRADE.
7. COORDINATE EXACT LOCATION WITH MECHANICAL TRADE PRIOR TO ROUGH-IN.

apace Design
spaceDesign
2113 Lake Ave. Historical Dist.
Fort Wayne, IN 46805-5704
260.422.3000
www.spaceDesign.com

KEITH ENGINEERING DESIGN, INC.
208 S. FIRST ST
RESTON, IL 61550
PH. 309.274.5000

REVISED LEVEL 1 ELECTRICAL POWER PLAN

Peoria PlayHouse Children's Museum
Peoria Park District
Glen Oak Park Pavillion
Peoria, IL 61603

LICENSED PROFESSIONAL ENGINEER BRIAN R. KEITH 062-050586 EXPIRES 30NOV15 STATE OF ILLINOIS

DATE: 03/19/2014

NO.	ISSUE	DATE
1	Bidding Documents	3.19.14

DATE 3.19.2014	PROJECT NO. 24905.02
DRAWN BY DRJ	SHEET
CHECKED TDC	E121
APPROVED BRK	7 OF 20

CODE

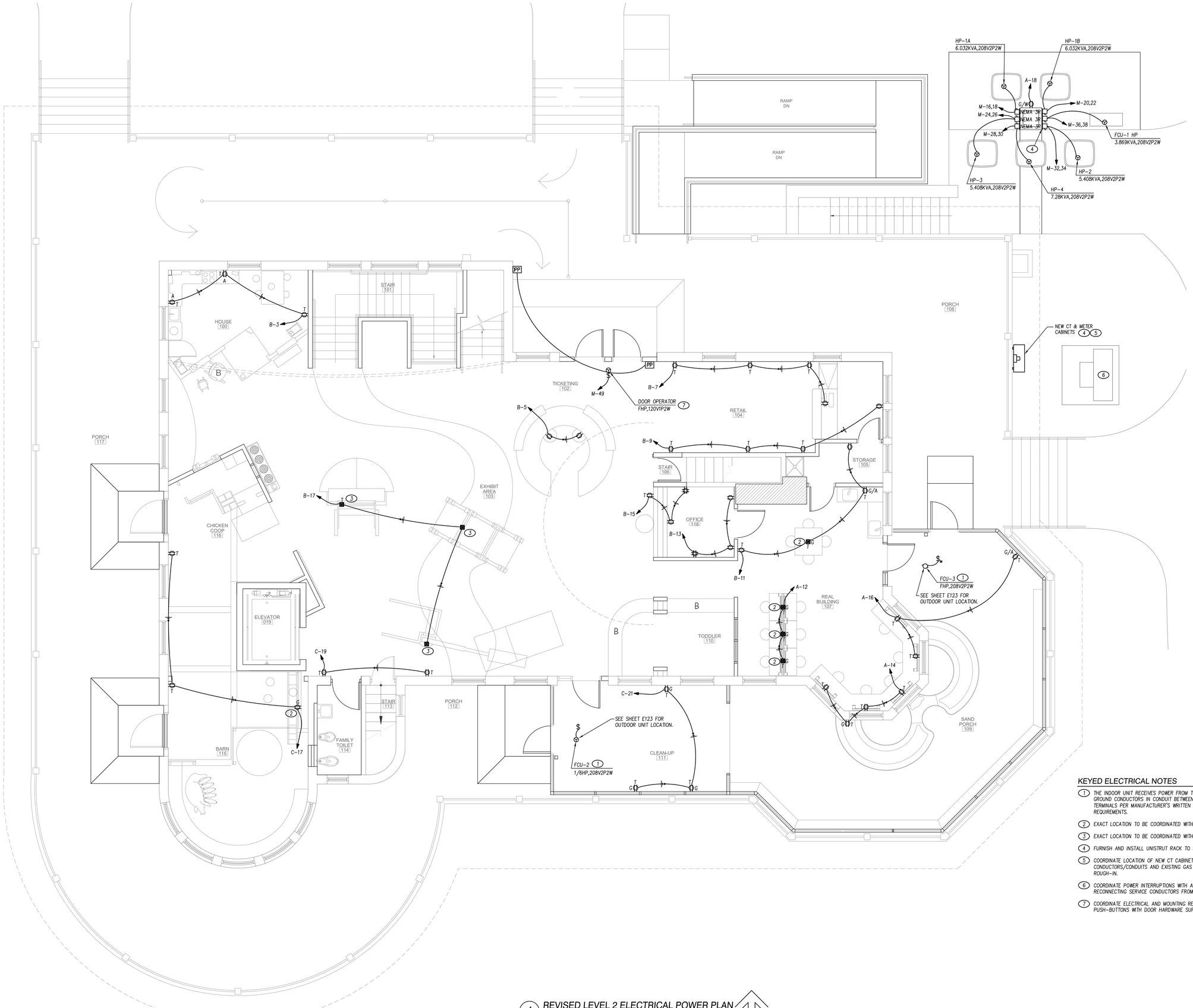

KEYED ELECTRICAL NOTES

1. THE INDOOR UNIT RECEIVES POWER FROM THE OUTDOOR UNIT. ROUTE 2#12 & 1#12 GROUND CONDUCTORS IN CONDUIT BETWEEN UNITS. MAKE FINAL CONNECTIONS TO TERMINALS PER MANUFACTURER'S WRITTEN INSTRUCTIONS. VERIFY EXACT REQUIREMENTS.
2. EXACT LOCATION TO BE COORDINATED WITH EXHIBIT FABRICATOR.
3. EXACT LOCATION TO BE COORDINATED WITH ARCHITECT AND EXHIBIT FABRICATOR.
4. FURNISH AND INSTALL UNISTRUT RACK TO SUPPORT EQUIPMENT.
5. COORDINATE LOCATION OF NEW CT CABINET WITH EXISTING UNDERGROUND SERVICE CONDUCTORS/CONDUITS AND EXISTING GAS METER. CONTACT AMEREN PRIOR TO ROUGH-IN.
6. COORDINATE POWER INTERRUPTIONS WITH AMEREN FOR DISCONNECTING AND RECONNECTING SERVICE CONDUCTORS FROM EXISTING PAD MOUNTED TRANSFORMER.
7. COORDINATE ELECTRICAL AND MOUNTING REQUIREMENTS OF DOOR OPERATOR AND PUSH-BUTTONS WITH DOOR HARDWARE SUPPLIER PRIOR TO ROUGH-IN.

1 REVISED LEVEL 2 ELECTRICAL POWER PLAN
SCALE: 1/4" = 1'-0"

NORTH

apace Design
spaceDesign
2113 Sam Rio Avenue Grand Ojea
Peoria, Illinois 61614-4764
(309) 693-7133
www.spaceDesign.com

KEITH ENGINEERING DESIGN, INC.
208 S. FIRST ST.
MOTON, IL 61550
FAX 309-274-5003

REVISED LEVEL 2 ELECTRICAL POWER PLAN

Peoria PlayHouse Children's Museum
Peoria Park District
Glen Oak Park Pavillion
Peoria, IL 61603

LICENSED PROFESSIONAL ENGINEER BRIAN R. KEITH 062-050306 EXPIRES 11/30/2015 STATE OF ILLINOIS

DATE: 03/19/2014

NO.	ISSUE	DATE
1	Bidding Documents	3.19.14

DATE 3.19.2014	PROJECT NO. 24905.02
DRAWN BY DRJ	SHEET
CHECKED TDC	E122
APPROVED BRK	8 OF 20

CODE

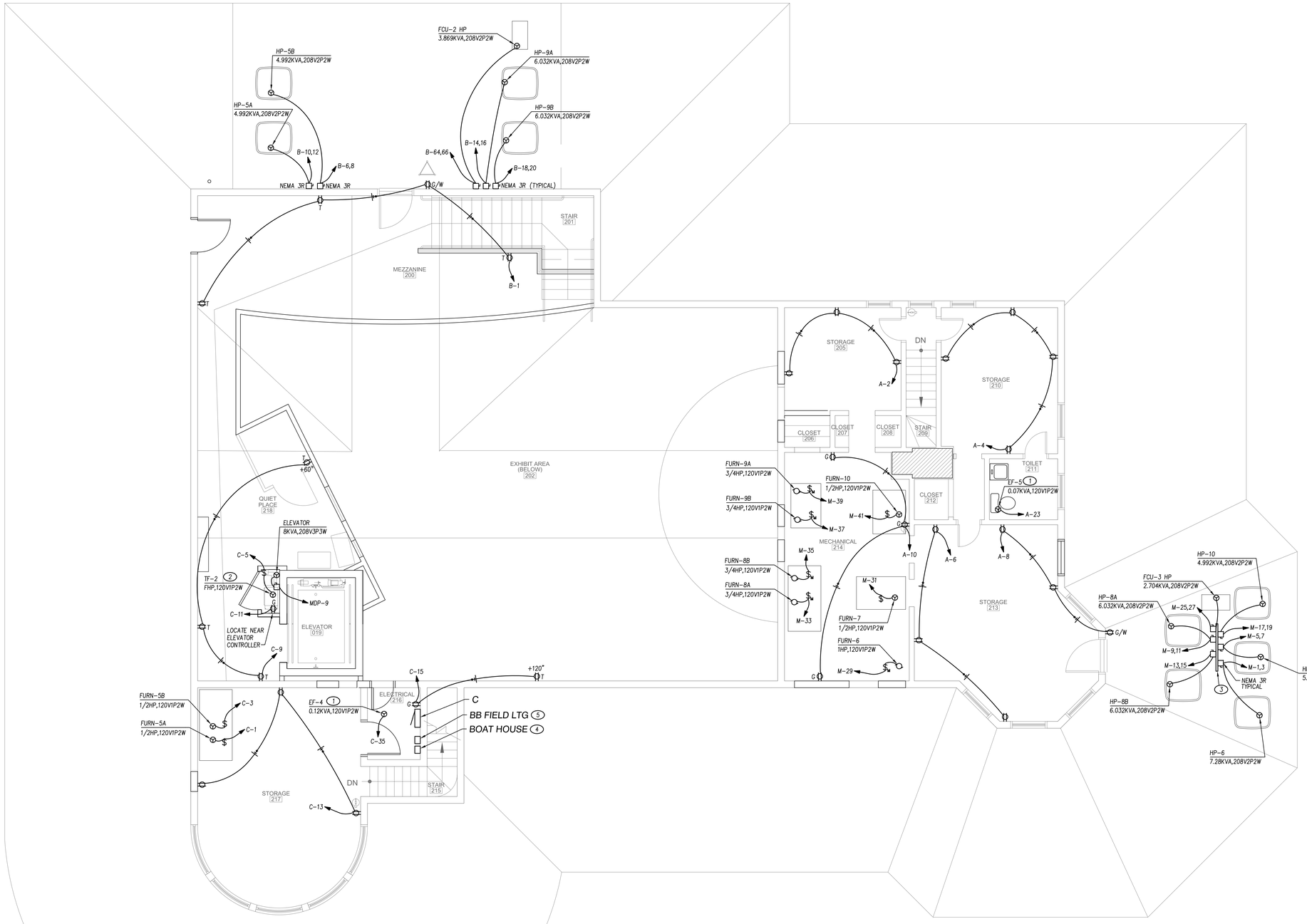

1 REVISED LEVEL 3 ELECTRICAL POWER PLAN
SCALE: 1/4" = 1'-0"

KEYED ELECTRICAL NOTES

1. CONNECT EXHAUST FAN TO SWITCHED PORTION OF THE ROOM'S LIGHTING CIRCUIT.
2. EQUIPMENT ROOM EXHAUST FAN SHALL BE CONTROLLED BY LINE-VOLTAGE THERMOSTAT, FURNISHED BY HVAC CONTRACTOR AND INSTALLED BY ELECTRICAL CONTRACTOR. COORDINATE LOCATION.
3. FURNISH AND INSTALL UNISTRUT RACK TO SUPPORT EQUIPMENT.
4. PROVIDE NEW 100 AMP FUSED DISCONNECT IN ELECTRICAL CLOSET TO RECONNECT TO EXISTING BOAT HOUSE FEEDER. SEE REVISED ONE-LINE AND RISER DIAGRAMS ON SHEET E200.
5. PROVIDE NEW 100 AMP FUSED DISCONNECT IN ELECTRICAL CLOSET TO RECONNECT TO EXISTING BASEBALL FIELD FEEDER. SEE REVISED ONE-LINE AND RISER DIAGRAMS ON SHEET E200.

apace Design
spaceDesign
2113 Main St. Advanced Data
Peoria, Illinois 61606-2134
309.673.1000
www.spaceDesign.com

KED
KEITH ENGINEERING DESIGN, INC.
208 S. FIRST ST
MINONK, IL 61560
PH. 309.374.2000
FAX 309.374.2003

REVISED LEVEL 3 ELECTRICAL POWER PLAN

Peoria PlayHouse Children's Museum
Peoria Park District
Glen Oak Park Pavillion
Peoria, IL 61603

LICENSED PROFESSIONAL ENGINEER
BRIAN K. KEITH
062-050596
EXPIRES 30NOV15
STATE OF ILLINOIS

DATE: 03/19/2014

NO.	ISSUE	DATE
1	Bidding Documents	3.19.14

DATE 3.19.2014	PROJECT NO. 24905.02
DRAWN BY DRJ	SHEET
CHECKED TDC	E123
APPROVED BRK	9 OF 20

CODE

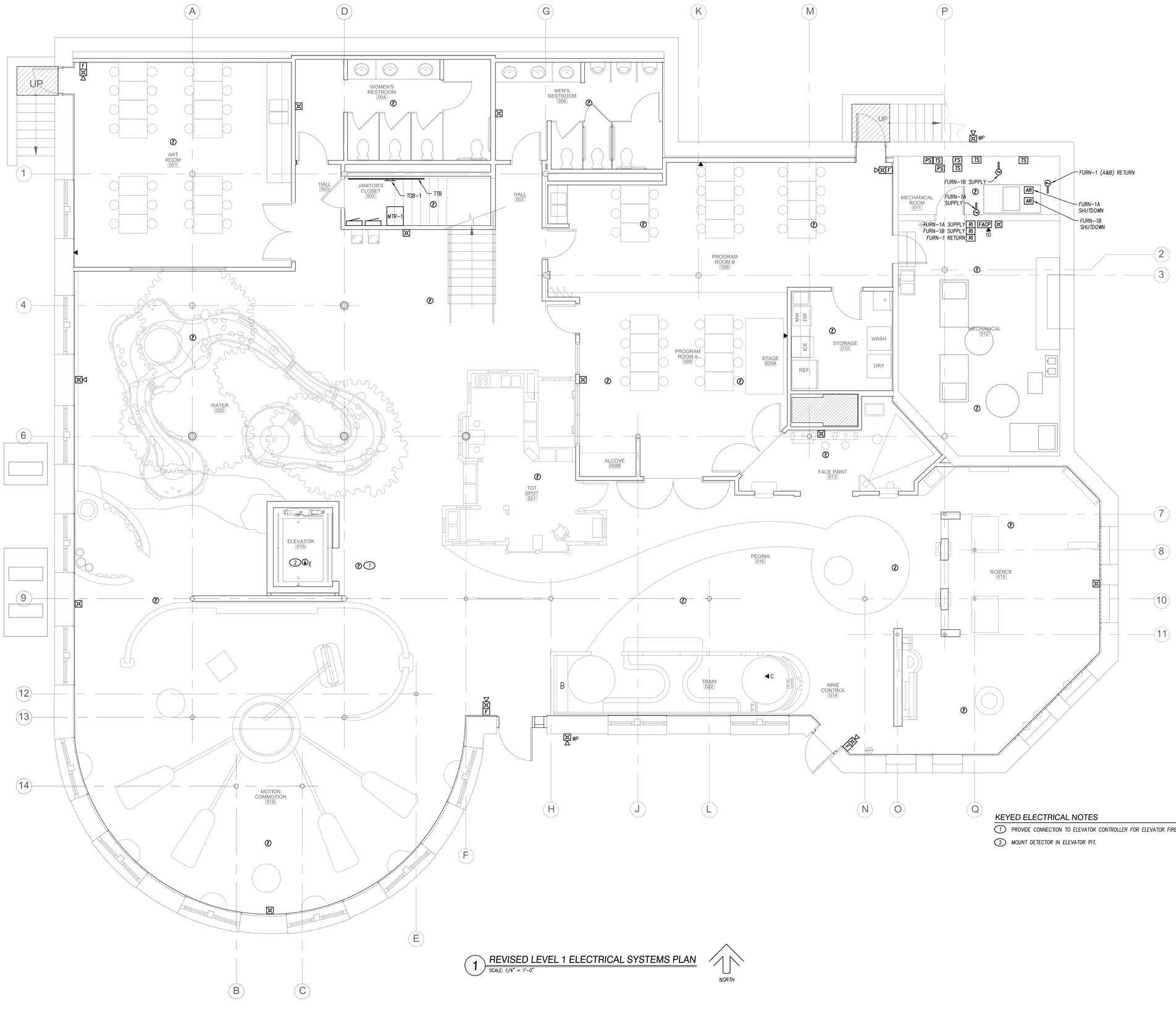

KEYED ELECTRICAL NOTES

1. PROVIDE CONNECTION TO ELEVATOR CONTROLLER FOR ELEVATOR FIREFIGHTER RECALL.
2. MOUNT DETECTOR IN ELEVATOR PIT.

1 REVISED LEVEL 1 ELECTRICAL SYSTEMS PLAN
SCALE: 1/4" = 1'-0"

NORTH

apace Design

apaceDesign
7113 Lake Ave. Advanced Drive
Fort Wayne, Indiana 46804
260.918.0000 FAX 260.918.0004
www.apaceDesign.com

KEITH ENGINEERING DESIGN, INC.
208 S. FIRST ST
MONTANA, 61550
PH. 309-274-5000

REVISED LEVEL 1 ELECTRICAL SYSTEMS PLAN

Peoria PlayHouse Children's Museum
Peoria Park District
Glen Oak Park Pavillion
Peoria, IL 61603

LICENSED PROFESSIONAL ENGINEER
BRIAN K. KEITH
062-050306
EXPIRES: 10/31/15
STATE OF ILLINOIS

DATE: 03/19/2014

NO.	ISSUE	DATE
1	Bidding Documents	3.19.14

DATE 3.19.2014	PROJECT NO. 24905.02
DRAWN BY TDC	SHEET
CHECKED TDC	E131
APPROVED BRK	10 OF 20

CODE

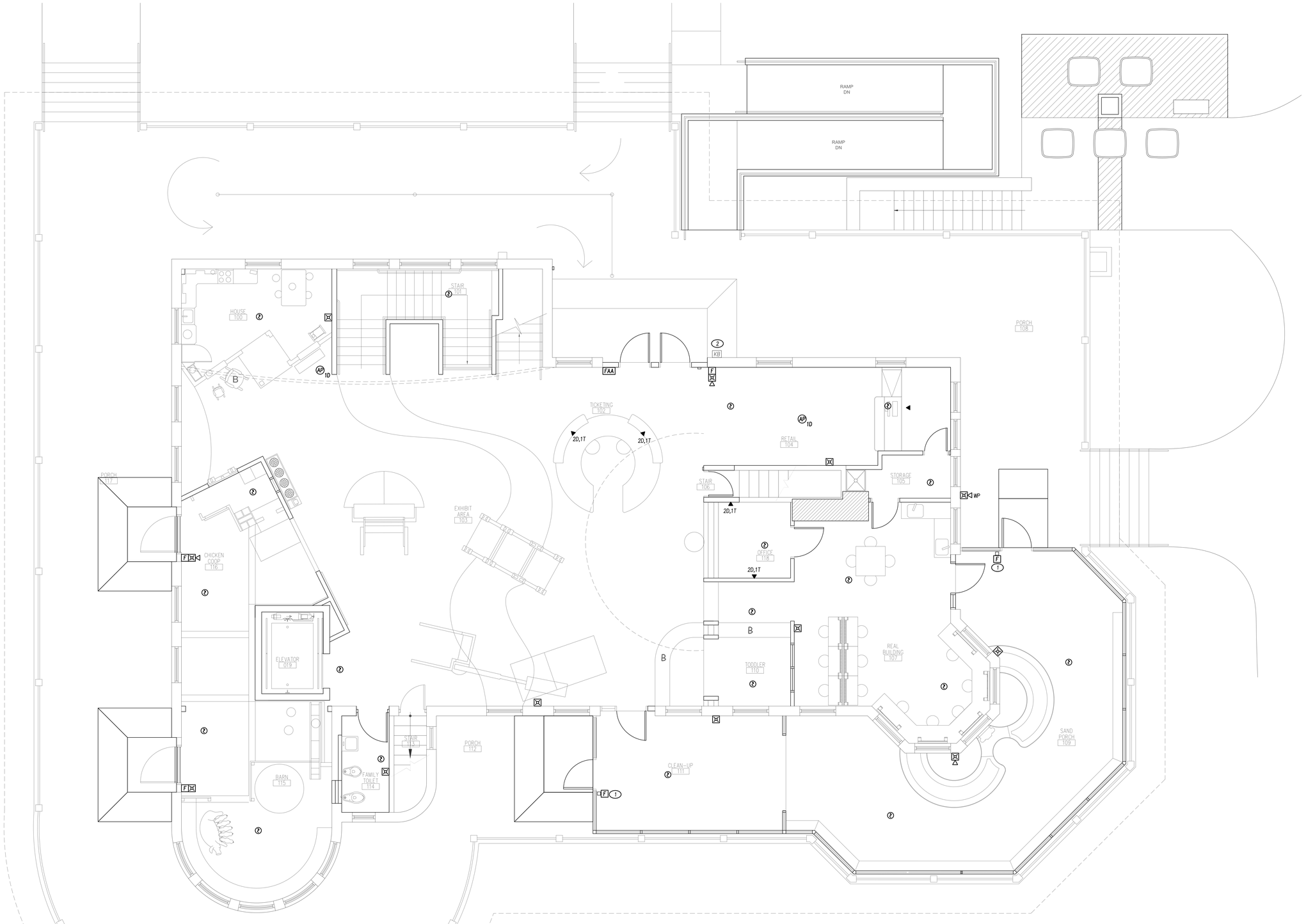

KEYED ELECTRICAL NOTES

1. MOUNT DEVICE ON STEEL TUBE POST. SEE ARCHITECTURAL PLANS FOR POST CONSTRUCTION.
2. REINSTALL EXISTING KNOX BOX FROM PREVIOUS LOCATION. SEE PLAN 1/E102 FOR EXISTING LOCATION.

1 REVISED LEVEL 2 ELECTRICAL SYSTEMS PLAN
SCALE: 1/4" = 1'-0"

NORTH

apace Design

KED
KEITH ENGINEERING DESIGN, INC.
208 S. FIRST ST.
MORTON, IL 61550
PH. 309-938-4005
FAX 309-214-0063

REVISED LEVEL 2 ELECTRICAL SYSTEMS PLAN

Peoria PlayHouse Children's Museum
Peoria Park District
Glen Oak Park Pavillion
Peoria, IL 61603

LICENSED PROFESSIONAL ENGINEER
BRIAN R. KEITH
062-050366
EXPIRES: 30/09/15
STATE OF ILLINOIS

DATE: 03/19/2014

NO.	ISSUE	DATE
1	Bidding Documents	3.19.14

DATE 3.19.2014	PROJECT NO. 24905.02
DRAWN BY TDC	SHEET
CHECKED TDC	E132
APPROVED BRK	11 OF 20

CODE

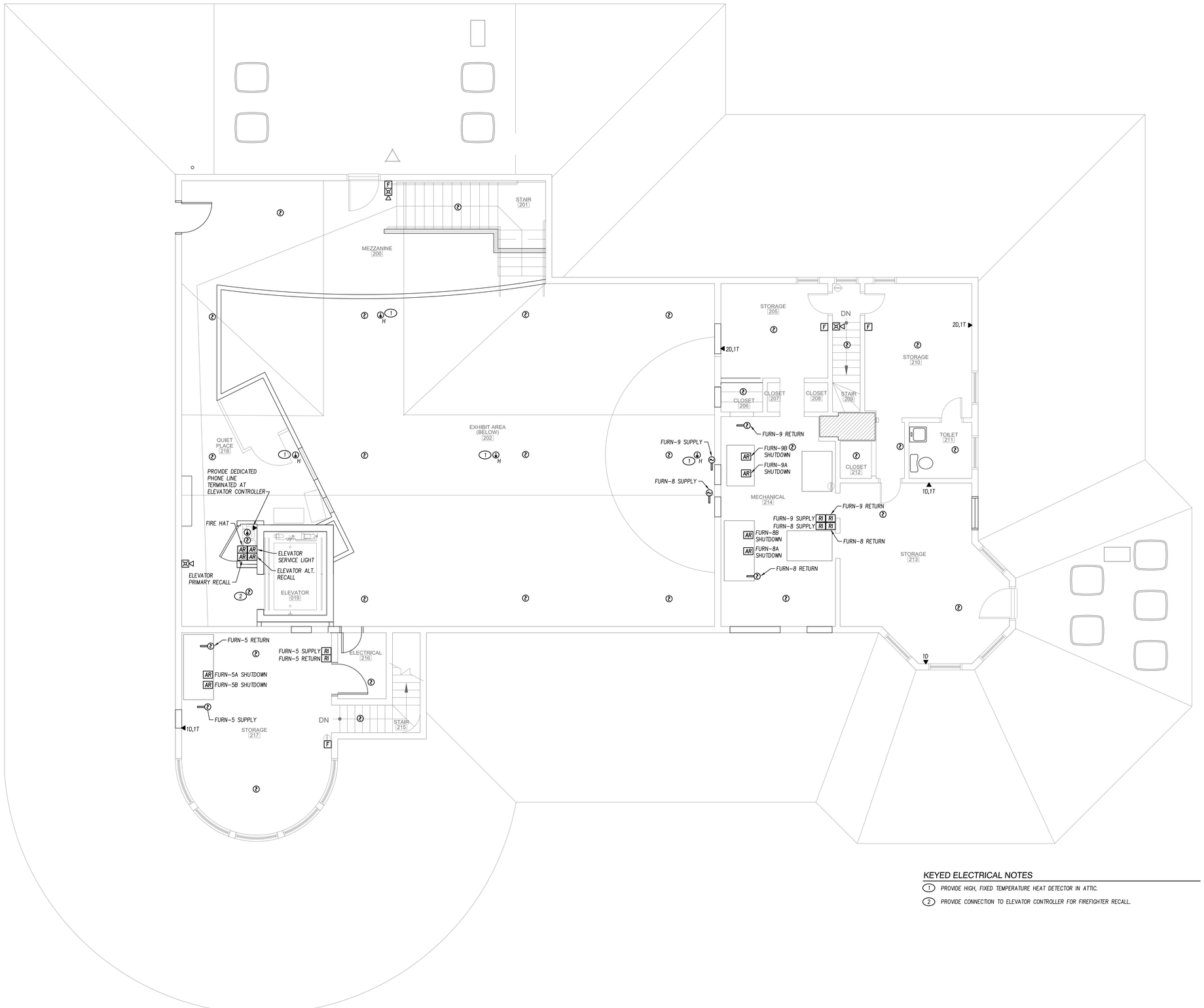

KEYED ELECTRICAL NOTES

1. PROVIDE HIGH, FIXED TEMPERATURE HEAT DETECTOR IN ATTIC.
2. PROVIDE CONNECTION TO ELEVATOR CONTROLLER FOR FIREFIGHTER RECALL.

1 REVISED LEVEL 3 ELECTRICAL SYSTEMS PLAN
SCALE: 1/4" = 1'-0"

NORTH

apace Design

spaceDesign
2112 SW War Memorial Drive
Peoria, Illinois 61602-1318
(309) 676-0755 FAX 676-4794
www.spaceDesign.com

architects engineers designers

KEITH ENGINEERING DESIGN, INC.
208 S. FIRST ST.
ANDOVER, IL 61250
PH. 309-274-0003
FAX 309-274-0003

REVISED LEVEL 3 ELECTRICAL SYSTEMS PLAN

Peoria PlayHouse Children's Museum
Peoria Park District
Glen Oak Park Pavillion
Peoria, IL 61603

LICENSED PROFESSIONAL ENGINEER BRIAN K. BRYANT 062-050306 EXPIRES 30/04/15 STATE OF ILLINOIS

DATE: 03/19/2014

NO.	ISSUE	DATE
1	Bidding Documents	3.19.14

DATE 3.19.2014	PROJECT NO. 24905.02
DRAWN BY TDC	SHEET
CHECKED TDC	E133
APPROVED BRK	12 OF 20

CODE

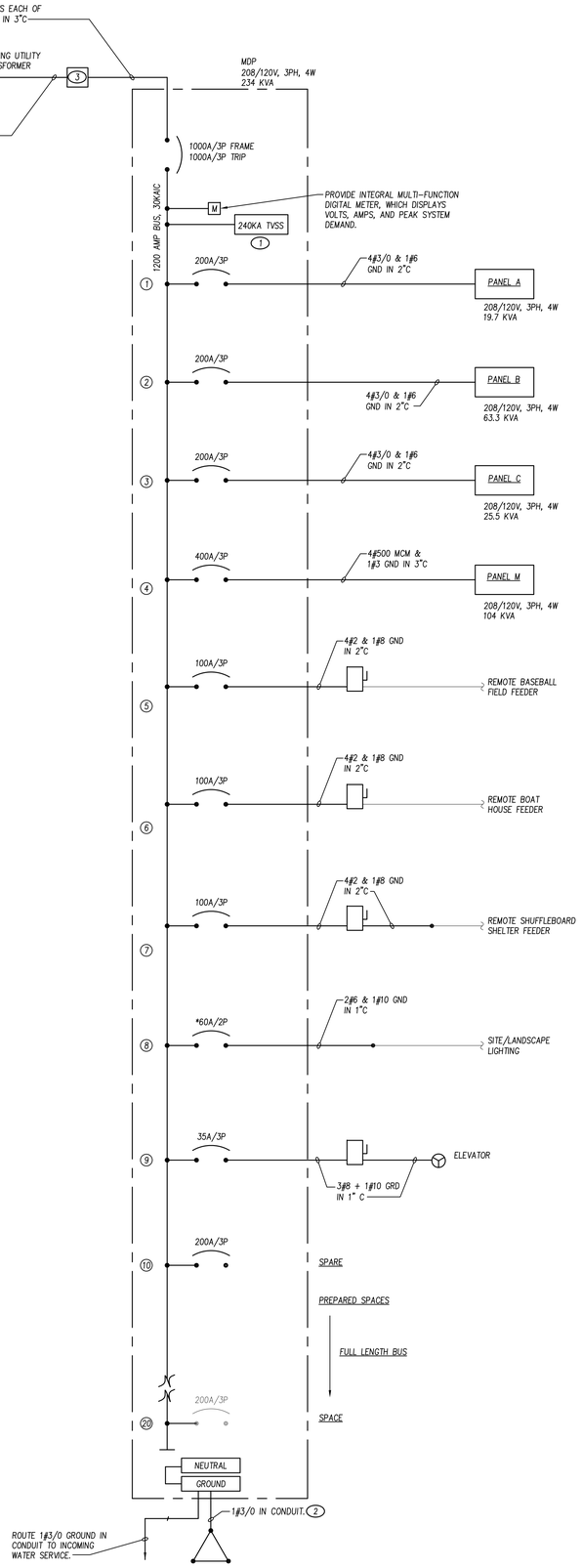

1 ONE-LINE DIAGRAM - NEW

SCALE: NONE

*VERIFY EXISTING FUSES IN EXISTING "MDP" SWITCH UNIT PRIOR TO ORDERING NEW BREAKER FOR SITE LIGHTING CIRCUIT.

KEYED ELECTRICAL NOTES

1. FURNISH AND INSTALL FACTORY MOUNTED 240-KA INTEGRAL TVSS IN MAIN DISTRIBUTION PANEL MDP.
2. CONNECT TO EXISTING SERVICE GROUND.
3. UTILITY CT AND METER CABINETS, FURNISHED AND INSTALLED BY ELECTRICAL CONTRACTOR, APPROVED BY AMEREN.

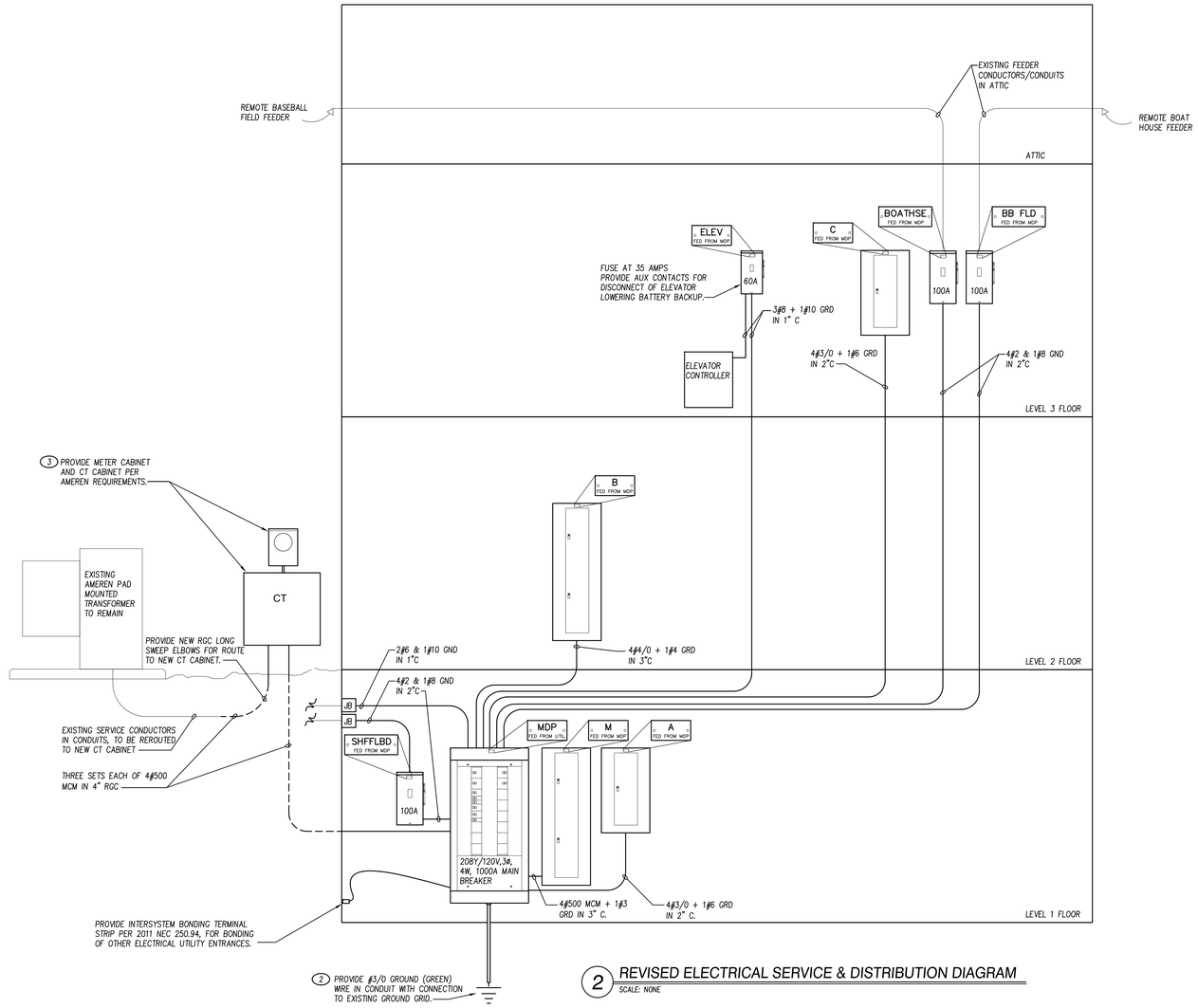

2 REVISED ELECTRICAL SERVICE & DISTRIBUTION DIAGRAM

SCALE: NONE

ELECTRICAL CONTRACTOR SHALL CONTACT AMEREN FOR COORDINATION OF SERVICE WORK REQUIREMENTS. VERIFY AVAILABLE SERVICE FAULT CURRENT PRIOR TO ORDERING SERVICE ENTRANCE EQUIPMENT.

apace Design
apace design studio
apacedesign
2113 Sam Hill Avenue Grand Ditch
Bloomington, Illinois 61704
309.828.1330 309.828.4194
www.apacedesign.com

KED
KEITH ENGINEERING DESIGN, INC.
208 S. FIRST ST.
ANDOVER, IL 61250
PH. 309.274-5000
FAX 309.274-5003

REVISED ONE-LINE, RISER DIAGRAMS

Peoria PlayHouse Children's Museum
Peoria Park District
Glen Oak Park Pavillion
Peoria, IL 61603

LICENSED PROFESSIONAL ENGINEER BRIAN K. KEITH 062-050306 EXPIRES: 10/31/15 STATE OF ILLINOIS

DATE: 03/19/2014

NO.	ISSUE	DATE
1	Bidding Documents	3.19.14

DATE 3.19.2014	PROJECT NO. 24905.02
DRAWN BY TDC	SHEET
CHECKED TDC	E200
APPROVED BRK	13 OF 20

CODE

MDP

ROOM MECHANICAL 012 · VOLTS 208Y/120V 3P 4W · AIC 22,000
MOUNTING SURFACE · BUS AMPS 1200 · MAIN BKR 1000
FED FROM UTILITY · NEUTRAL 100% · LUGS STANDARD
NOTE

CKT #	CIRCUIT DESCRIPTION	KVA LOAD A	B	C	BREAKER TRIP/POLES	COND.	FEEDER RACEWAY AND CONDUCTORS
1	PANEL M	35.9	36.2	30.2	400/3	CU	3"C,3#500kcmil,#500kcmil N,#2G
2	PANEL A	10.3	8.94	5.5	200/3	CU	2"C,3#3/0,#3/0N,#6G
3	PANEL B	20.8	19.1	18.6	200/3	CU	2"C,3#3/0,#3/0N,#6G
4	PANEL C	9.21	8.02	6.94	200/3	CU	2"C,3#3/0,#3/0N,#6G
5	BASEBALL FIELD FEEDER	2	2	2	100/3	CU	1-1/4"C,3#2,#2N,#8G
6	BOAT HOUSE FEEDER	2	2	2	100/3	CU	1-1/4"C,3#2,#2N,#8G
7	SHUFFLEBOARD FEEDER	2	2	2	100/3	CU	1-1/4"C,3#2,#2N,#8G
8	SITE LIGHTING FEEDER	3	3		60/2	CU	3/4"C,2#6,#6N,#10G
9	ELEVATOR	2.67	2.67	2.67	35/3	CU	3/4"C,3#10,#10G
10	SPARE	0	0	0	20/3	CU	
11	SPARE	0	0	0	20/3	CU	
12	SPARE	0	0	0	20/3	CU	
13	SPARE	0	0	0	20/3	CU	
14	SPARE	0	0	0	20/3	CU	
15	SPARE	0	0	0	20/3	CU	
16	SPARE	0	0	0	20/3	CU	
17	SPARE	0	0	0	20/3	CU	
18	SPARE	0	0	0	20/3	CU	
19	SPARE	0	0	0	20/3	CU	
20	SPARE	0	0	0	20/3	CU	
	TOTAL CONNECTED KVA BY PHASE	87.8	83.9	69.9			

	CONN. KVA	CALC. KVA			CONN. KVA	CALC. KVA	
LIGHTING	22.2	27.8	(125%)	CONTINUOUS	0	0	(125%)
LARGEST MOTOR	8	10	(125%)	HEATING	0	0	(100%)
OTHER MOTORS	147	147	(100%)	NONCONTINUOUS	24	24	(100%)
RECEPTACLES	40.6	25.3	(50%>10)	KITCHEN EQUIP	0	0	(N/A)
Continuous	0	0	(0%)	NONCOIN/DIVERSE	0	0	(N/A)
				TOTAL KVA	242	234	

BALANCED THREE PHASE AMPS 649

Panel M

ROOM MECHANICAL 012 · VOLTS 208Y/120V 3P 4W · AIC 10,000
MOUNTING SURFACE · BUS AMPS 400 · MAIN BKR MLO
FED FROM MDP · NEUTRAL 100% · LUGS STANDARD
NOTE

CKT #	CKT BKR	LOAD KVA	CIRCUIT DESCRIPTION		CKT #	CKT BKR	LOAD KVA	CIRCUIT DESCRIPTION
1	40/2	7.28	HP-6	a	2	20/1	1.92	FURN-1A
3				b	4	20/1	1.92	FURN-1B
5	40/2	5.41	HP-7	c	6	20/1	0.2	EF-3
7				a	8	20/1	1.18	FURN-2
9	40/2	6.03	HP-8A	b	10	20/2	1.66	FURN-3
11				c	12			
13	40/2	6.03	HP-8B	a	14	20/1	1.92	FURN-4
15				b	16	40/2	6.03	HP-1A
17	35/2	4.99	HP-10	c	18			
19				a	20	40/2	6.03	HP-1B
21	20/2	0	SPARE	b	22			
23				c	24	40/2	5.41	HP-3
25	25/2	2.7	FCU-3 HP	a	26			
27				b	28	50/2	7.28	HP-4
29	20/1	1.92	FURN-6	c	30			
31	20/1	1.18	FURN-7	a	32	40/2	5.41	HP-2
33	20/1	1.66	FURN-8A	b	34			
35	20/1	1.66	FURN-8B	c	36	30/2	3.87	FCU-1 HP
37	20/1	1.66	FURN-9B	a	38			
39	20/1	1.66	FURN-9A	b	40	20/1	1.66	AIR COMPRESSOR
41	20/1	1.18	FURN-10	c	42	20/1	0.5	WATER SOFTENER
43	20/1	0.864	FURN-11	a	44	30/2	4.08	SANITARY EJECTOR PUMP
45	40/2	6	WATER HEATER	b	46			
47				c	48	20/2	2.88	SUMP PUMP
49	20/1	0.1	DOOR OPERATOR	a	50			
51	20/1	0	SPARE	b	52	20/1	0	SPARE
53	20/1	0	SPARE	c	54	20/1	0	SPARE
55	20/1	0	SPARE	a	56	20/1	0	SPARE
57	20/1	0	SPARE	b	58	20/1	0	SPARE
59	20/1	0	SPARE	c	60	20/1	0	SPARE
61	20/1	0	SPARE	a	62	20/1	0	SPARE
63	20/1	0	SPARE	b	64	20/1	0	SPARE
65	20/1	0	SPARE	c	66	20/1	0	SPARE
67	20/1	0	SPARE	a	68	20/1	0	SPARE
69	20/1	0	SPARE	b	70	20/1	0	SPARE
71	20/1	0	SPARE	c	72	20/1	0	SPARE
73	20/1	0	SPARE	a	74	20/1	0	SPARE
75	20/1	0	SPARE	b	76	20/1	0	SPARE
77	20/1	0	SPARE	c	78	20/1	0	SPARE
79	20/1	0	SPARE	a	80	20/1	0	SPARE
81	20/1	0	SPARE	b	82	20/1	0	SPARE
83	20/1	0	SPARE	c	84	20/1	0	SPARE

	CONN. KVA	CALC. KVA			CONN. KVA	CALC. KVA	
LIGHTING	0	0	(125%)	CONTINUOUS	0	0	(125%)
LARGEST MOTOR	7.28	9.1	(125%)	HEATING	0	0	(100%)
OTHER MOTORS	95	95	(100%)	NONCONTINUOUS	0	0	(100%)
RECEPTACLES	0	0	(50%>10)	KITCHEN EQUIP	0	0	(N/A)
Continuous	0	0	(0%)	NONCOIN/DIVERSE	0	0	(N/A)
				TOTAL KVA	102	104	

BALANCED THREE PHASE AMPS 289
PHASE BALANCE PERCENT: PHASE A 105% PHASE B 106% PHASE C 88.7%

Panel A

ROOM MECHANICAL 012 · VOLTS 208Y/120V 3P 4W · AIC 10,000
MOUNTING SURFACE · BUS AMPS 200 · MAIN BKR MLO
FED FROM MDP · NEUTRAL 100% · LUGS STANDARD
NOTE

CKT #	CKT BKR	LOAD KVA	CIRCUIT DESCRIPTION		CKT #	CKT BKR	LOAD KVA	CIRCUIT DESCRIPTION
1	40/2	7	DRYER	a	2	20/1	0.6	RECEPTACLE
3				b	4	20/1	0.8	RECEPTACLE
5	20/1	0.5	WASHER	c	6	20/1	0.6	RECEPTACLE
7	20/1	0.5	MICRO	a	8	20/1	0.6	RECEPTACLE
9	20/1	0.5	DISHWASHER	b	10	20/1	0.6	RECEPTACLE
11	20/1	0.72	ICE	c	12	20/1	0.6	RECEPTACLE
13	20/1	0.5	REF	a	14	20/1	0.8	RECEPTACLE
15	20/1	0.2	FACP	b	16	20/1	0.6	RECEPTACLE
17	20/1	0.425	LIGHTING	c	18	20/1	0.2	RECEPTACLE
19	20/1	0.45	LIGHTING	a	20	20/1	0.8	RECEPTACLE
21	20/1	0.54	LIGHTING	b	22	20/1	0.6	RECEPTACLE
23	20/1	0.855	LIGHTING, EF-5	c	24	20/1	0.4	RECEPTACLE
25	20/1	0	SPARE	a	26	20/1	0.8	RECEPTACLE
27	20/1	0	SPARE	b	28	20/1	0.8	RECEPTACLE
29	20/1	0	SPARE	c	30	20/1	0.8	RECEPTACLE
31	20/1	0	SPARE	a	32	20/1	0.8	RECEPTACLE
33	20/1	0	SPARE	b	34	20/1	0.8	RECEPTACLE
35	20/1	0	SPARE	c	36	20/1	0.4	RECEPTACLE
37	20/1	0	SPARE	a	38	20/1	0.9	RECEPTACLE, HOT WATER RETURN PUMP
39	20/1	0	SPARE	b	40	20/1	0	SPARE
41	20/1	0	SPARE	c	42	20/1	0	SPARE

	CONN. KVA	CALC. KVA			CONN. KVA	CALC. KVA	
LIGHTING	2.2	2.75	(125%)	CONTINUOUS	0	0	(125%)
LARGEST MOTOR	0.72	0.9	(125%)	HEATING	0	0	(100%)
OTHER MOTORS	0.37	0.37	(100%)	NONCONTINUOUS	0	0	(100%)
RECEPTACLES	21.4	15.7	(50%>10)	KITCHEN EQUIP	0	0	(N/A)
Continuous	0	0	(0%)	NONCOIN/DIVERSE	0	0	(N/A)
				TOTAL KVA	24.7	19.7	

BALANCED THREE PHASE AMPS 54.7
PHASE BALANCE PERCENT: PHASE A 125% PHASE B 109% PHASE C 65.7%

Panel B

ROOM ELEC 002 · VOLTS 208Y/120V 3P 4W · AIC 10,000
MOUNTING SURFACE · BUS AMPS 200 · MAIN BKR MLO
FED FROM MDP · NEUTRAL 100% · LUGS STANDARD
NOTE

CKT #	CKT BKR	LOAD KVA	CIRCUIT DESCRIPTION		CKT #	CKT BKR	LOAD KVA	CIRCUIT DESCRIPTION
1	20/1	0.8	RECEPTACLE	a	2	20/1	0.192	TF-1
3	20/1	0.6	RECEPTACLE	b	4	20/1	0.525	EF-1, EF-2
5	20/1	0.4	RECEPTACLE	c	6	35/2	4.99	HP-5B
7	20/1	0.8	RECEPTACLE	a	8			
9	20/1	0.8	RECEPTACLE	b	10	35/2	4.99	HP-5A
11	20/1	0.8	RECEPTACLE	c	12			
13	20/1	0.8	RECEPTACLE	a	14	40/2	6.03	HP-9A
15	20/1	0.8	RECEPTACLE	b	16			
17	20/1	0.6	RECEPTACLE	c	18	40/2	6.03	HP-9B
19	20/1	0.8	RECEPTACLE	a	20			
21	20/1	0.8	RECEPTACLE	b	22	20/1	1.6	LIGHTING
23	20/1	0.6	RECEPTACLE	c	24	20/1	0.695	LIGHTING
25	20/1	0.6	RECEPTACLE	a	26	20/1	0.905	LIGHTING
27	20/1	0.4	RECEPTACLE	b	28	20/1	0.494	LIGHTING
29	20/1	0.2	RECEPTACLE	c	30	20/1	0.389	LIGHTING
31	20/1	0.6	RECEPTACLE	a	32	20/1	0.18	LIGHTING
33	20/1	0.8	RECEPTACLE	b	34	20/1	1.2	LIGHTING
35	20/1	0.8	RECEPTACLE	c	36	20/1	1.2	LIGHTING
37	20/1	0.8	RECEPTACLE	a	38	20/1	1.2	LIGHTING
39	20/1	0	SPARE	b	40	20/1	1.2	LIGHTING
41	20/1	0	SPARE	c	42	20/1	0.6	LIGHTING
43	20/1	0	SPARE	a	44	20/1	1.2	LIGHTING
45	20/1	0	SPARE	b	46	20/1	1.2	LIGHTING
47	20/1	0	SPARE	c	48	20/1	0.6	LIGHTING
49	20/1	0	SPARE	a	50	20/1	1.2	LIGHTING
51	20/1	0	SPARE	b	52	20/1	0.6	LIGHTING
53	20/1	0	SPARE	c	54	20/1	0.907	LIGHTING
55	20/1	0	SPARE	a	56	20/1	1	LIGHTING
57	20/1	0	SPARE	b	58	20/1	0.636	LIGHTING
59	20/1	0	SPARE	c	60	20/1	0.85	LIGHTING
61	20/1	0	SPARE	a	62	20/1	1.17	LIGHTING
63	20/1	0	SPARE	b	64	30/2	3.87	FCU-2 HP
65	20/1	0	SPARE	c	66			
67	20/1	0	SPARE	a	68	20/1	0	SPARE
69	20/1	0	SPARE	b	70	20/1	0	SPARE
71	20/1	0	SPARE	c	72	20/1	0	SPARE
73	20/1	0	SPARE	a	74	20/1	0	SPARE
75	20/1	0	SPARE	b	76	20/1	0	SPARE
77	20/1	0	SPARE	c	78	20/1	0	SPARE
79	20/1	0	SPARE	a	80	20/1	0	SPARE
81	20/1	0	SPARE	b	82	20/1	0	SPARE
83	20/1	0	SPARE	c	84	20/1	0	SPARE

	CONN. KVA	CALC. KVA			CONN. KVA	CALC. KVA	
LIGHTING	19	23.8	(125%)	CONTINUOUS	0	0	(125%)
LARGEST MOTOR	6.03	7.54	(125%)	HEATING	0	0	(100%)
OTHER MOTORS	20.6	20.6	(100%)	NONCONTINUOUS	0	0	(100%)
RECEPTACLES	12.8	11.4	(50%>10)	KITCHEN EQUIP	0	0	(N/A)
Continuous	0	0	(0%)	NONCOIN/DIVERSE	0	0	(N/A)
				TOTAL KVA	58.5	63.3	

BALANCED THREE PHASE AMPS 176
PHASE BALANCE PERCENT: PHASE A 107% PHASE B 98% PHASE C 95.3%

Panel C

ROOM ELECTRICAL 216 · VOLTS 208Y/120V 3P 4W · AIC 10,000
MOUNTING SURFACE · BUS AMPS 200 · MAIN BKR MLO
FED FROM MDP · NEUTRAL 100% · LUGS STANDARD
NOTE

CKT #	CKT BKR	LOAD KVA	CIRCUIT DESCRIPTION		CKT #	CKT BKR	LOAD KVA	CIRCUIT DESCRIPTION
1	20/1	1.18	FURN-5A	a	2	40/2	4.14	FCU-4 HP
3	20/1	1.18	FURN-5B	b	4			
5	20/1	0.1	TF-2	c	6	40/2	4.14	FCU-6 HP
7	20/1	0	SPARE	a	8			
9	20/1	0.6	RECEPTACLE	b	10	40/2	4.14	FCU-5 HP
11	20/1	0.2	RECEPTACLE	c	12			
13	20/1	0.6	RECEPTACLE	a	14	20/1	1.66	ELEV SUMP PUMP
15	20/1	0.4	RECEPTACLE	b	16	20/1	0.1	SUMP PUMP HIGH LEVEL ALARM
17	20/1	0.6	RECEPTACLE	c	18	20/1	0.3	ELEV SHAFT LIGHTING
19	20/1	0.4	RECEPTACLE	a	20	20/1	0	SPARE
21	20/1	0.6	RECEPTACLE	b	22	20/1	0	SPARE
23	20/1	0.2	RECEPTACLE	c	24	20/1	0	SPARE
25	20/1	0.6	RECEPTACLE	a	26	20/1	0	SPARE
27	20/1	0.8	RECEPTACLE	b	28	20/1	0	SPARE
29	20/1	0.8	RECEPTACLE	c	30	20/1	0	SPARE
31	20/1	0.4	RECEPTACLE	a	32	20/1	0	SPARE
33	20/1	0.2	RECEPTACLE	b	34	20/1	0	SPARE
35	20/1	0.6	LIGHTING, EF-4	c	36	20/1	0	SPARE
37	20/1	0.24	LIGHTING	a	38	20/1	0	SPARE
39	20/1	0	SPARE	b	40	20/1	0	SPARE
41	20/1	0	SPARE	c	42	20/1	0	SPARE

	CONN. KVA	CALC. KVA			CONN. KVA	CALC. KVA	
LIGHTING	1.02	1.28	(125%)	CONTINUOUS	0	0	(125%)
LARGEST MOTOR	4.14	5.17	(125%)	HEATING	0	0	(100%)
OTHER MOTORS	12.6	12.6	(100%)	NONCONTINUOUS	0	0	(100%)
RECEPTACLES	6.4	6.4	(50%>10)	KITCHEN EQUIP	0	0	(N/A)
Continuous	0	0	(0%)	NONCOIN/DIVERSE	0	0	(N/A)
				TOTAL KVA	24.2	25.5	

BALANCED THREE PHASE AMPS 70.7
PHASE BALANCE PERCENT: PHASE A 114% PHASE B 99.5% PHASE C 86.1%

EQUIPMENT CONNECTION SCHEDULE

CALLOUT	SYMBOL	NEMA	VOLTS	AMPS	KVA	HP	CIRCUIT	WIRE CALLOUT
AIR COMPRESSOR			120V 1P 2W	17.25	1.66	3/4 HP	M-40	3/4"C,1#12,#12N,#12G
DOOR OPERATOR			120V 1P 2W	1.04	0.1	F HP	M-49	3/4"C,1#12,#12N,#12G
EF-1			120V 1P 2W	1.82	0.18		B-4	3/4"C,1#12,#12N,#12G
EF-2			120V 1P 2W	3.65	0.35		B-4	3/4"C,1#12,#12N,#12G
EF-3			120V 1P 2W	2.08	0.2		M-6	3/4"C,1#12,#12N,#12G
EF-4			120V 1P 2W	1.25	0.12		C-35	3/4"C,1#12,#12N,#12G
EF-5			120V 1P 2W	0.73	0.07		A-23	3/4"C,1#12,#12N,#12G
ELEV SUMP PUMP			120V 1P 2W	17.25	1.66	3/4 HP	C-14	3/4"C,1#12,#12N,#12G
ELEVATOR			208V 3P 3W	27.76	8		MDP-9	3/4"C,3#10,#10G
FACP			120V 1P 2W	2.08	0.2		A-15	3/4"C,1#12,#12N,#12G
FCU-1			208V 2P 2W	3.17	0.53	1/6 HP	NOTE 1	
FCU-1 HP		NEMA 3R	208V 2P 2W	23.25	3.87		M-36,38	3/4"C,2#10,#10G
FCU-2			208V 2P 2W	3.17	0.53	1/6 HP	NOTE 1	
FCU-2 HP			208V 2P 2W	23.25	3.87		B-64,66	3/4"C,2#10,#10G
FCU-3			208V 2P 2W	0.6	0.1	F HP	NOTE 1	
FCU-3 HP			208V 2P 2W	16.25	2.7		M-25,27	3/4"C,2#12,#12G
FCU-4			208V 2P 2W	3.17	0.53	1/6 HP	NOTE 1	
FCU-4 HP		NEMA 3R	208V 2P 2W	24.88	4.14		C-2,4	3/4"C,2#10,#10G
FCU-5			208V 2P 2W	3.17	0.53	1/6 HP	NOTE 1	
FCU-5 HP		NEMA 3R	208V 2P 2W	24.88	4.14		C-10,12	3/4"C,2#10,#10G
FCU-6			208V 2P 2W	3.17	0.53	1/6 HP	NOTE 1	
FCU-6 HP		NEMA 3R	208V 2P 2W	24.88	4.14		C-6,8	3/4"C,2#10,#10G
FURN-1A			120V 1P 2W	20	1.92	1 HP	M-2	3/4"C,1#12,#12N,#12G
FURN-1B			120V 1P 2W	20	1.92	1 HP	M-4	3/4"C,1#12,#12N,#12G
FURN-2			120V 1P 2W	12.25	1.18	1/2 HP	M-8	3/4"C,1#12,#12N,#12G
FURN-3			208V 2P 2W	9.95	1.66	3/4 HP	M-10,12	3/4"C,2#12,#12G
FURN-4			120V 1P 2W	20	1.92	1 HP	M-14	3/4"C,1#12,#12N,#12G
FURN-5A			120V 1P 2W	12.25	1.18	1/2 HP	C-1	3/4"C,1#12,#12N,#12G
FURN-5B			120V 1P 2W	12.25	1.18	1/2 HP	C-3	3/4"C,1#12,#12N,#12G
FURN-6			120V 1P 2W	20	1.92	1 HP	M-29	3/4"C,1#12,#12N,#12G
FURN-7			120V 1P 2W	12.25	1.18	1/2 HP	M-31	3/4"C,1#12,#12N,#12G
FURN-8A			120V 1P 2W	17.25	1.66	3/4 HP	M-33	3/4"C,1#12,#12N,#12G
FURN-8B			120V 1P 2W	17.25	1.66	3/4 HP	M-35	3/4"C,1#12,#12N,#12G
FURN-9A			120V 1P 2W	17.25	1.66	3/4 HP	M-39	3/4"C,1#12,#12N,#12G
FURN-9B			120V 1P 2W	17.25	1.66	3/4 HP	M-37	3/4"C,1#12,#12N,#12G
FURN-10			120V 1P 2W	12.25	1.18	1/2 HP	M-41	3/4"C,1#12,#12N,#12G
FURN-11			120V 1P 2W	9	0.86	1/3 HP	M-43	3/4"C,1#12,#12N,#12G
HOT WATER RETURN PUMP			120V 1P 2W	1.04	0.1	F HP	A-38	3/4"C,1#12,#12N,#12G
HP-1A		NEMA 3R	208V 2P 2W	36.25	6.03		M-16,18	3/4"C,2#8,#10G
HP-1B		NEMA 3R	208V 2P 2W	36.25	6.03		M-20,22	3/4"C,2#8,#10G
HP-2		NEMA 3R	208V 2P 2W	32.5	5.41		M-32,34	3/4"C,2#8,#10G
HP-3		NEMA 3R	208V 2P 2W	32.5	5.41		M-24,26	3/4"C,2#8,#10G
HP-4		NEMA 3R	208V 2P 2W	43.75	7.28		M-28,30	3/4"C,2#6,#10G
HP-5A		NEMA 3R	208V 2P 2W	30	4.99		B-10,12	3/4"C,2#10,#10G
HP-5B		NEMA 3R	208V 2P 2W	30	4.99		B-6,8	3/4"C,2#10,#10G
HP-6		NEMA 3R	208V 2P 2W	43.75	7.28		M-1,3	3/4"C,2#8,#10G
HP-7			208V 2P 2W	32.5	5.41		M-5,7	3/4"C,2#8,#10G
HP-8A			208V 2P 2W	36.25	6.03		M-9,11	3/4"C,2#8,#10G
HP-8B			208V 2P 2W	36.25	6.03		M-13,15	3/4"C,2#8,#10G
HP-9A			208V 2P 2W	36.25	6.03		B-14,16	3/4"C,2#8,#10G
HP-9B		NEMA 3R	208V 2P 2W	36.25	6.03		B-18,20	3/4"C,2#8,#10G
HP-10			208V 2P 2W	30	4.99		M-17,19	3/4"C,2#10,#10G
ICE			120V 1P 2W	7.5	0.72		A-11	3/4"C,1#12,#12N,#12G
SANITARY EJECTOR PUMP			208V 2P 2W	19.62	4.08	3 HP	M-44,46	3/4"C,2#10,#10G
SUMP PUMP			208V 2P 2W	13.85	2.88	2 HP	M-48,50	3/4"C,2#12,#12G
SUMP PUMP HIGH LEVEL ALARM			120V 1P 2W	1.04	0.1		C-16	3/4"C,1#12,#12N,#12G
TF-1			120V 1P 2W	2	0.19		B-2	3/4"C,1#12,#12N,#12G
TF-2			120V 1P 2W	1.04	0.1	F HP	C-5	3/4"C,1#12,#12N,#12G
WATER HEATER			208V 2P 2W	36.06	6		M-45,47	3/4"C,2#8,#10G
WATER SOFTENER			120V 1P 2W	5.21	0.5		M-42	3/4"C,1#12,#12N,#12G

NOTE 1: FAN COIL UNIT IS POWERED THROUGH THE ASSOCIATED HEAT PUMP. PROVIDE POWER AND CONTROL CONDUCTORS SPECIFIC TO THE MANUFACTURER AND MODEL BEING INSTALLED. VOLTAGES TO FCU'S VARY DEPENDING ON MANUFACTURER. COORDINATE WITH MECHANICAL TRADE.

apaceDesign
architects engineers designers
apaceDesign 2112 East War Memorial Drive Peoria Illinois 61614 t:309.685.4722 f:309.685.4784 www.apaceDesign.com

KED
KEITH ENGINEERING DESIGN, INC.
208 S. FIRST ST. MORTON, IL 61550
PH. 309-938-4005 FAX 309-214-0063

PANEL SCHEDULES

Peoria PlayHouse Children's Museum
Peoria Park District
Glen Oak Park Pavillion
Peoria, IL 61603

LICENSED PROFESSIONAL ENGINEER
BRIAN R. KEITH
062-050306
EXPIRES: 30NOV15
STATE OF ILLINOIS
DATE: 03/19/2014

NO.	ISSUE	DATE
1	Bidding Documents	3.19.14

DATE 3.19.2014	PROJECT NO. 24905.02
DRAWN BY DRJ	SHEET
CHECKED TDC	E201
APPROVED BRK	14 OF 20

CODE

FIRE ALARM SCHEDULE

SYMBOL	DESCRIPTION	MANUFACTURER
FACP	FIRE ALARM CONTROL PANEL, MICRO-PROCESSOR BASED, ADDRESSABLE; INCLUDE ALL HARDWARE, SOFTWARE, AND PROGRAMMING AS REQUIRED TO PROVIDE A COMPLETE AND OPERATIONAL SYSTEM. INCLUDE ALL CONNECTIONS TO FACILITY NETWORK SYSTEM.	EST IQ SERIES SIMPLEX NOTIFIER SIEMENS
FAA	FIRE ALARM ANNUNCIATOR PANEL. FLUSH MOUNT, CAPABLE OF REMOTELY VIEWING AND CONTROLLING THE FIRE ALARM CONTROL PANEL. ALL POWER AND COMMUNICATIONS FOR ANNUNCIATOR SHALL BE FROM THE FIRE ALARM CONTROL PANEL. VERIFY THE EXACT LOCATION OF THE ANNUNCIATOR WITH THE LOCAL AUTHORITY HAVING JURISDICTION PRIOR TO ROUGH-IN. SEE SPECIFICATIONS FOR ADDITIONAL INFORMATION.	EST RLCD-C SIMPLEX NOTIFIER SIEMENS
F	ADDRESSABLE MANUAL FIRE ALARM PULL STATION, RED FINISH, RAISED-LETTER OPERATING INSTRUCTIONS IN CONTRASTING COLOR, DOUBLE-ACTION MECHANISM, WITH STATION RESET BY KEY OR WRENCH-OPERATED SWITCH, 24-VOLT DC, TWO-WIRE TYPE.	EST SIGA-278 SIMPLEX SIEMENS NOTIFIER
(smoke detector symbol)	ADDRESSABLE SMOKE DETECTOR, PHOTOELECTRIC, TWO-WIRE TYPE, WITH INTEGRAL ADDRESSABLE MODULE ARRANGED TO COMMUNICATE DETECTOR STATUS (NORMAL, ALARM, OR TROUBLE) TO FIRE ALARM CONTROL PANEL, STANDARD TWIST-LOCK BASE MODULE, SELF-RESTORING, WITH INTEGRAL LED VISUAL-INDICATING LIGHT.	EST SIGA-PS-SB SIMPLEX SIEMENS NOTIFIER
H (heat detector symbol)	ADDRESSABLE HEAT DETECTOR, FIXED 135-DEGREE TEMPERATURE, WITH INTEGRAL ADDRESSABLE MODULE ARRANGED TO COMMUNICATE DETECTOR STATUS (NORMAL, ALARM, OR TROUBLE) TO FIRE ALARM CONTROL PANEL, TWIST-LOCK BASE MODULE, SELF-RESTORING, WITH INTEGRAL LED VISUAL-INDICATING LIGHT. "H" INDICATES HIGH TEMPERATURE (190°F) VERSION.	EST SIGA-HFS SIMPLEX SIEMENS NOTIFIER
(duct smoke detector symbol)	ADDRESSABLE DUCT SMOKE DETECTOR, PHOTOELECTRIC ANALOG SENSOR, 2-WIRE OPERATION, 2-PIECE DESIGN, 24-VOLT DC, LOW-PROFILE BASE, MULTI-FUNCTION LED INDICATOR WITH SAMPLING TUBES TO MATCH DUCTWORK DIMENSIONS. COMPLETE WITH HOUSING AND ALL RELATED ACCESSORIES	EST SIGA SERIES SIMPLEX NOTIFIER SIEMENS
RI	REMOTE INDICATING LIGHT/KEY SWITCH, CAPABLE OF PROVIDING REMOTE STATUS FOR SMOKE DETECTORS NOT READILY VISIBLE FROM NORMAL VIEWING POSITION. COORDINATE EXACT LOCATION WITH CONSTRUCTION MANAGER PRIOR TO ROUGH-IN.	EST SIMPLEX NOTIFIER SIEMENS
(audio/visual symbol)	AUDIO/VISUAL NOTIFICATION DEVICE, 24-VOLT DC, SEMI-FLUSH WALL MOUNTING, RED HIGH-ABUSE PLASTIC HOUSING, WHITE LETTERING, SPEAKER WITH SELECTABLE OUTPUT LEVELS, WITH HIGH-INTENSITY STROBE UNIT. FIELD ADJUSTABLE CANDELA OUTPUT RATING. CANDELA RATINGS SHALL BE AS DICTATED BY NFPA AND THE AUTHORITY HAVING JURISDICTION.	EST G1RF-HDVM SIMPLEX SIEMENS NOTIFIER
WP (audio/visual symbol)	WEATHERPROOF AUDIO/VISUAL NOTIFICATION DEVICE, 24-VOLT DC, SURFACE WALL MOUNT, RED HOUSING, SPEAKER WITH SELECTABLE OUTPUT LEVELS, WITH HIGH-INTENSITY STROBE UNIT. FIELD ADJUSTABLE CANDELA OUTPUT RATING.	EST WG4RF-SVMC SIMPLEX SIEMENS NOTIFIER
(visual symbol)	VISUAL NOTIFICATION DEVICE, 24-VOLT DC, SEMI-FLUSH WALL MOUNTING, RED HIGH-ABUSE PLASTIC HOUSING, WHITE LETTERING, WITH HIGH-INTENSITY STROBE UNIT. FIELD ADJUSTABLE CANDELA OUTPUT RATING. CANDELA RATINGS SHALL BE AS DICTATED BY NFPA AND THE AUTHORITY HAVING JURISDICTION.	EST G1RF-VM SIMPLEX SIEMENS NOTIFIER
AR	ADDRESSABLE FIRE ALARM RELAY, 24-VOLT, 4-WIRE OPERATION. RELAY SHALL INCLUDE AN ADDRESSABLE CONTROL MODULE AND SLAVE RELAY WITH AUXILIARY CONTACTS SUITABLE FOR CONTROLLING LOADS AS DESIGNATED.	EST SIGA-CR SIMPLEX SIEMENS NOTIFIER
KB	EXISTING KNOX BOX TO BE RELOCATED.	
FS	ADDRESSABLE MONITORING MODULE CONNECTION TO SPRINKLER SYSTEM WATER FLOW SWITCH (SWITCH BY OTHERS)	EST SIGA-CT1 SIMPLEX SIEMENS NOTIFIER
TS	ADDRESSABLE MONITORING MODULE CONNECTION TO SPRINKLER SYSTEM TAMPER SWITCH (SWITCH BY OTHERS)	EST SIGA-CT1 SIMPLEX SIEMENS NOTIFIER
PS	ADDRESSABLE MONITORING MODULE CONNECTION TO SPRINKLER SYSTEM PRESSURE SWITCH (SWITCH BY OTHERS)	EST SIGA-CT1 SIMPLEX SIEMENS NOTIFIER

SYSTEM OUTPUTS

CONTROL UNIT ANNUNCIATION (A–O): A – AUDIBLE ALARM INDICATION; B – VISUAL ALARM INDICATION; C – SUPERVISORY SIGNAL INDICATION; D – TROUBLE SIGNAL INDICATION; E – ACTUATE AUDIBLE COMMON TROUBLE SIGNAL

NOTIFICATION (P–U): P – ACTUATE AUDIBLE ALARM SEQUENCE; Q – ACTUATE VISUAL ALARM SEQUENCE; R – SEND ALARM SIGNAL TO DIGITAL COMMUNICATOR; S – SEND SUPERVISORY SIGNAL TO DIGITAL COMMUNICATOR; T – SEND TROUBLE SIGNAL TO DIGITAL COMMUNICATOR

AUXILIARY CONTROL (AR) (V–Z): V – ACTIVATE HVAC CONTROL SHUT DOWN SEQUENCE

	SYSTEM INPUTS	A	B	C	D	E	F	G	H	I	J	K	L	M	N	O	P	Q	R	S	T	U	V	W	X	Y	Z	
1	MANUAL FIRE ALARM PULL STATIONS	X	X														X	X	X				X					1
2	SMOKE DETECTORS	X	X														X	X	X				X					2
3	HEAT DETECTORS	X	X														X	X	X				X					3
4	DUCT SMOKE DETECTORS	X	X														X	X	X				X					4
5																	X	X	X				X					5
6																												6
7	FIRE ALARM AC POWER FAILURE			X																								7
8	FIRE ALARM SYSTEM LOW BATTERY				X	X															X							8
9	OPEN CIRCUIT				X	X															X							9
10	GROUND FAULT				X	X															X							10
11	NOTIFICATION APPLIANCE CIRCUIT SHORT				X	X															X							11
12																												
13																												
14																												
15																												
		A	B	C	D	E	F	G	H	I	J	K	L	M	N	O	P	Q	R	S	T	U	V	W	X	Y	Z	

FIRE ALARM SYSTEM NOTES:

1. COORDINATE ALL WORK WITH THE FIRE ALARM SYSTEM MANUFACTURER'S REPRESENTATIVE DURING THE BIDDING PROCESS. INCLUDE ALL MATERIALS, LABOR AND PROGRAMMING IN BID PROPOSAL TO PROVIDE A COMPLETE AND OPERATIONAL INSTALLATION OF THE CENTRAL FIRE ALARM SYSTEM.
2. SEE PLANS FOR EQUIPMENT LOCATIONS AND DEVICE QUANTITIES.
3. ALL FIRE ALARM CABLING MAY BE ROUTED OPEN ABOVE ACCESSIBLE CEILINGS. ALL SUPPORTS SHALL BE SPACED A MAXIMUM 5'-0".
4. EXPOSED CONDUIT OR CABLING IS NOT PERMITTED. CABLING SHALL BE IN CONDUIT IN UNFINISHED AREAS.
5. ALL CABLING SHALL BE PER MANUFACTURER'S RECOMMENDATIONS.
6. INCLUDE ALL PROGRAMMING AND SYSTEM MODIFICATIONS IN QUOTATION TO PROVIDE A COMPLETE AND OPERATIONAL SYSTEM.
7. ALL FIRE ALARM CIRCUITS MAY BE ROUTED TOGETHER IN THE SAME RACEWAY.
8. NON-FIRE ALARM CONDUCTORS SHALL NOT BE ROUTED TOGETHER WITH FIRE ALARM CONDUCTORS.
9. AC LINE VOLTAGE CONDUCTORS SHALL NOT BE ROUTED WITH FIRE ALARM CABLING.
10. ALL SIGNAL DEVICE CIRCUIT LOOPS SHALL BE WIRED STYLE 4, CLASS B PER NFPA 72, ARTICLE 3-4.4.
11. ALL INITIATING DEVICE CIRCUITS FOR CONTACT DEVICES SHALL BE WIRED STYLE A, CLASS B PER NFPA 72, ARTICLE 3-5. T-TAPPING IS NOT ALLOWED. EACH CIRCUIT MUST ENTER AND EXIT EVERY DEVICE IN A CONTINUOUS LOOP TO THE LAST DEVICE WHICH SHALL BE TERMINATED WITH AN END-OF-LINE RESISTOR.
12. ALL NOTIFICATION APPLIANCE CIRCUITS SHALL BE WIRED STYLE Y, CLASS B PER NFPA 72, ARTICLE 3-7. T-TAPPING IS NOT ALLOWED. EACH CIRCUIT MUST ENTER AND EXIT EVERY DEVICE IN A CONTINUOUS LOOP TO THE LAST DEVICE WHICH SHALL BE TERMINATED WITH AN END-OF-LINE RESISTOR.
13. FIRE ALARM ANNUNCIATOR PANEL SHALL BE MOUNTED AT 48" A.F.F. TO TOP OF CABINET.
14. MANUAL PULL STATIONS TO BE MOUNTED AT +42" ABOVE FINISHED FLOOR TO OPERABLE LEVER.
15. WALL MOUNTED HORN/STROBES TO BE MOUNTED 80" ABOVE FLOOR OR 6" BELOW CEILING, WHICHEVER IS LOWER.
16. WIRING SHOWN IS DIAGRAMMATIC ONLY. ACTUAL CONDUIT ROUTING AND DEVICE LOCATION SHALL BE DETERMINED IN THE FIELD.
17. ALL WIRING SHALL BE FROM DEVICE TERMINAL TO DEVICE TERMINAL.
18. DO NOT ROUTE CONDUITS INTO BOTTOM OF FACP CABINETS. THE BOTTOM OF CABINETS ARE RESERVED FOR BACKUP BATTERIES.
19. UPON ACTIVATION OF ANY INITIATING DEVICE, THE LOCAL PANEL SHALL:
   A. PROVIDE AUDIBLE ALARM NOTIFICATION FOR THE BUILDING.
   B. PROVIDE VISUAL ALARM NOTIFICATION FOR THE BUILDING.
19. ALL INSTALLATIONS SHALL BE UL LISTED FOR FIRE ALARM USE AND COMPLY WITH NFPA 72 AND THE CITY OF PEORIA REQUIREMENTS.
20. FIRE ALARM SUBMITTAL DATA SHEETS AND FULL SIZE DRAWINGS SHALL BE SUBMITTED FOR REVIEW BY THE ARCHITECT/ENGINEER PRIOR TO RELEASE OF ANY EQUIPMENT. THE INFORMATION SHALL INCLUDE THE FOLLOWING ITEMS:
   A. FIRE ALARM EQUIPMENT & SPECIFICATIONS.
   B. WIRE AND CABLING.
   C. AUTOCAD PLAN VIEW INDICATING ALL DEVICES AND INTERCONNECTING CABLING.
   D. NOTIFICATION CIRCUIT VOLTAGE DROP CALCULATIONS.

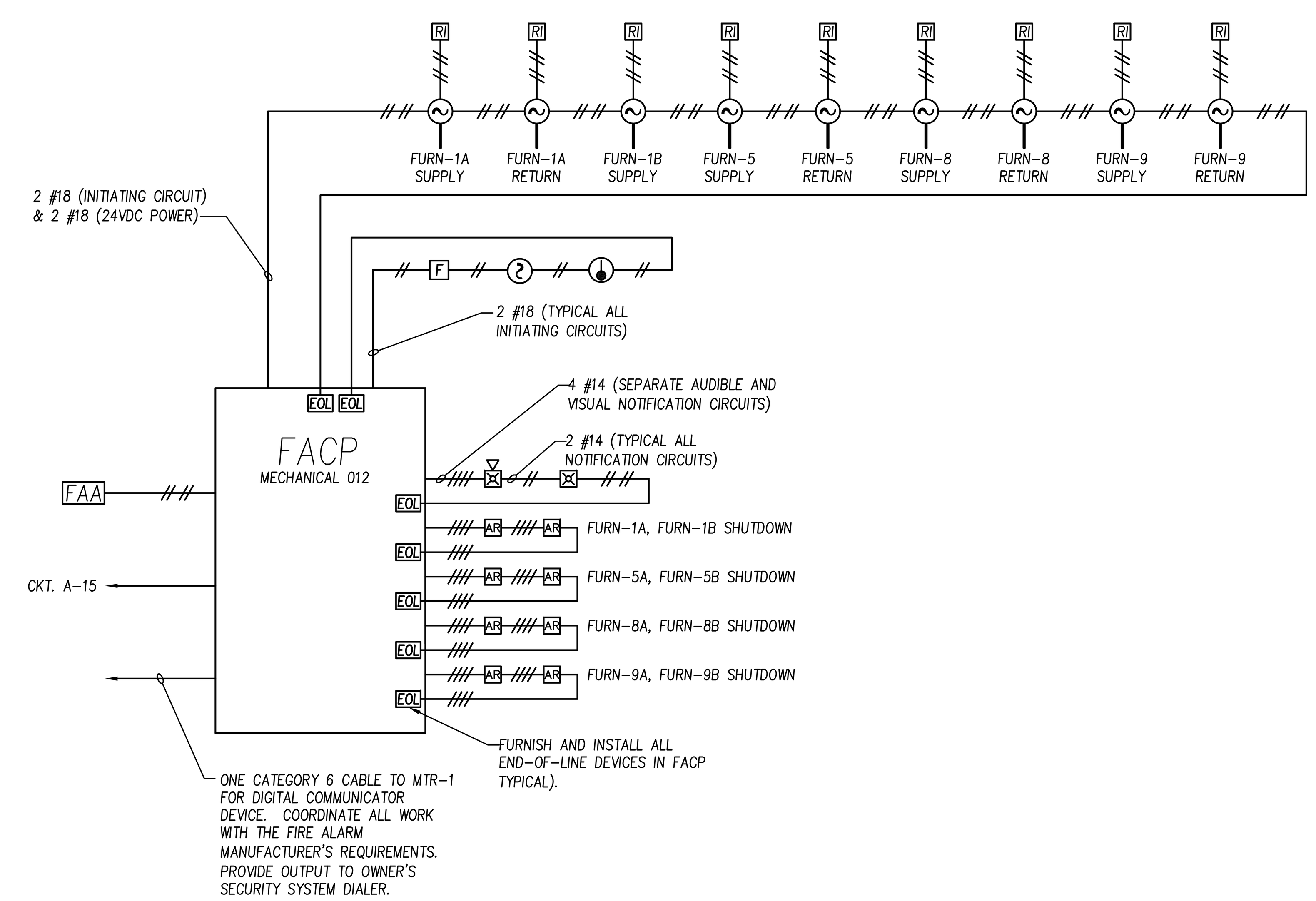

apaceDesign
architects engineers designers
apaceDesign
2112 East War Memorial Drive
Peoria Illinois 61614
t:309.685.4722 f:309.685.4784
www.apaceDesign.com

KED
KEITH ENGINEERING DESIGN, INC.
208 S. FIRST ST.
MORTON, IL 61550
PH. 309-938-4005
FAX 309-214-0063

FIRE ALARM SCHEDULES, RISER AND DETAILS

Peoria PlayHouse Children's Museum
Peoria Park District
Glen Oak Park Pavillion
Peoria, IL 61603

LICENSED PROFESSIONAL ENGINEER
BRIAN R. KEITH
062-050306
EXPIRES: 30NOV15
STATE OF ILLINOIS
DATE: 03/19/2014

NO.	ISSUE	DATE
1	Bidding Documents	3.19.14

DATE: 3.19.2014	PROJECT NO. 24905.02
DRAWN BY: DRJ	SHEET
CHECKED: TDC	E300
APPROVED: BRK	15 OF 20

CODE

PART 1 – EXECUTION

1.1 JOBSITE SAFETY AND CONTRACTOR REQUIREMENTS

1. IT IS THE OWNER'S INTENTION TO MAINTAIN A SAFE WORK ENVIRONMENT FOR ALL CONTRACTORS AND STAFF. FOR THIS REASON ALL CONTRACTORS WILL BE REQUIRED TO HAVE ANY EMPLOYEE BE TRAINED IN AND COMPLIANT WITH THE OWNER'S SAFETY STANDARDS, HAZARDOUS MATERIAL, AND COMMUNICATIONS PROCEDURES, DISASTER CODES, AND LIFE SAFETY PROCEDURES.
2. FOLLOW LOCAL, STATE, AND FEDERAL OSHA REGULATIONS.
3. MAINTAIN A LEGIBLE COPY OF A MATERIAL SAFETY DATA SHEET (MSDS) FOR EACH HAZARDOUS CHEMICAL BROUGHT ON SITE. MSDS SHEET SHALL BE READILY AVAILABLE ON REQUEST FOR REVIEW BY THE OWNER'S PERSONNEL. THE OWNER'S SAFETY OFFICER SHALL RECEIVE A LEGIBLE COPY OF ALL MSDS'S FOR EACH PRODUCT BROUGHT INTO THE PROJECT SITE.
4. THE CONTRACTOR SHALL CONDUCT DAILY SAFETY INSPECTIONS OF ALL WORK AREAS. KEEP AISLES CLEAR OF HAZARDS TO PATIENTS, VISITORS AND STAFF. WORK AREAS NEED TO BE PROPERLY MARKED.
5. IDENTIFY AND CORRECT HAZARDS. ESTABLISH AND MAINTAIN AN EFFECTIVE HOUSEKEEPING PROGRAM.
6. AT THE END OF ALL WORK SHIFTS, CEILINGS ARE ALL TO BE RESTORED, AISLES CLEARED, REFUSE DISPOSED OF, AND PENETRATIONS TO BE SEALED.

1.2 WORKMANSHIP

1. THE CONTRACTOR AND EMPLOYEES PERFORMING THE WORK SHALL HAVE THE NECESSARY KNOWLEDGE OF THE FOLLOWING STANDARDS AND REFERENCED GUIDELINES SET FORTH BY THE LISTED ORGANIZATIONS, AND COMPLY WITH SAID STANDARDS AND GUIDELINES WITH ALL ASPECTS OF THEIR INSTALLATIONS. COMPONENTS ARE TO BE INSTALLED IN A NEAT AND WORKMANSHIP-LIKE MANNER. IDENTIFICATIONS, MARKINGS, WIRE COLOR CODES, AND TERMINATIONS SHALL BE STRICTLY OBSERVED AND IN ACCORDANCE WITH THE MANUFACTURER'S SPECIFICATIONS.
2. THE APPLICABLE STANDARDS MENTIONED ABOVE ARE AS FOLLOWS:
   A. TIA/EIA
   - TIA/EIA-568-B COMMERCIAL BUILDING TELECOMMUNICATIONS CABLING STANDARD
   - TIA/EIA-568-B.1 GENERAL REQUIREMENTS
   - TIA/EIA-568-B.2 BALANCED TWISTED PAIR CABLING COMPONENTS STANDARD
   - TIA/EIA-568-B.3 OPTICAL FIBER CABLING COMPONENTS STANDARD
   - TIA/EIA-569-A COMMERCIAL BUILDING STANDARD FOR TELECOM. PATHWAYS AND SPACES.
   - TIA/EIA-606 ADMINISTRATION STANDARD FOR THE TELECOMMUNICATIONS INFRASTRUCTURE OF COMMERCIAL BUILDINGS
   - TIA/EIA-607 COMMERCIAL BUILDING GROUNDING/BONDING REQUIREMENTS

   NFPA
   - NFPA-70-101-11 NATIONAL ELECTRIC CODE (NEC)-2011

   ISO/IEEC
   - ISO/IEC 11801 GENERIC CABLING FOR CUSTOMER PREMISES
3. CONTRACTORS AND EMPLOYEES SHALL BE CERTIFIED FOR THE PANDUIT/ STRUCTURED CABLING SYSTEM. DOCUMENTATION OF CERTIFICATIONS SHALL BE PROVIDED PRIOR TO COMMENCING INSTALLATION.
4. THE OWNER'S INFORMATION TECHNOLOGY (I.T.) DEPARTMENT WILL HAVE THE FINAL DECISION AS TO THE EMPLOYEES PERFORMING ANY WORK THAT IS TO BE DONE RELATING TO VOICE OR DATA ON TECHNOLOGY SYSTEMS.
5. ALL MATERIALS TO BE INSTALLED ARE TO BE APPROVED PRIOR TO INSTALLATION. PROVIDE ALL NEW MATERIAL WITHOUT BLEMISH OR DEFECT.
6. THE CONTRACTOR SHALL BE RESPONSIBLE FOR ANY PERMITS AND INSPECTIONS NECESSARY.
7. THE CONTRACTOR SHALL BE RESPONSIBLE FOR ANY TOOLS AND EQUIPMENT NECESSARY TO SUCCESSFULLY INSTALL AND TEST THE INSTALLATION.
8. UNDER NO CIRCUMSTANCE WILL THE CONTRACTOR BE ALLOWED TO SUBCONTRACT ANY PORTION OF THE WORK TO BE DONE UNDER THE TECHNOLOGY SYSTEMS DESCRIPTION, WITHOUT I.T. DEPARTMENT APPROVAL.
9. THE CONTRACTOR IS RESPONSIBLE TO PROVIDE ONE POINT OF CONTACT FOR THE PROJECT TO THE OWNER.

1.3 GENERAL DESCRIPTION

1. FURNISH AND INSTALL A FUNCTIONAL AND STRUCTURED CABLING SYSTEM (SCS) COMPLETE WITH ALL ACCESSORIES. THE SCS SHALL SERVE AS A VEHICLE FOR THE TRANSPORT OF DATA AND VOICE THROUGHOUT THE NETWORK FROM DESIGNATED SERVERS, SWITCHES, DEMARCATION POINTS TO OUTLETS LOCATED AT VARIOUS DESKS, WORKSTATIONS AND OTHER LOCATIONS AS INDICATED.
2. THE STRUCTURED CABLING SYSTEM (SCS) SHALL CONSIST OF THE WORK AREA, HORIZONTAL, BACKBONE CABLING, RISER AND TELECOMMUNICATIONS (TC), EQUIPMENT ROOM (ER), ENTRANCE FACILITY (EF), AND ALL ADMINISTRATIVE ELEMENTS.
3. CABLE PATHWAY SHALL BE DESCRIBED AS THE EXTENSION OF ALL DATA AND VOICE CABLES AND SHALL BE WITHIN RACEWAY, CONDUIT, CABLE TRAY, CABLE HANGERS, OR OTHER DESIGNATED AND APPROVED CABLE DELIVERY SYSTEMS.
4. UNLESS OTHERWISE NOTED ALL MATERIALS AND CABLE SHALL BE MANUFACTURED AND SUPPLIED BY PANDUIT OR APPROVED EQUIVALENT.

1.4 CABLE INSTALLATION

ALL CABLING TO BE USED SHALL BE PLENUM OR RISER RATED AND COMPLIES WITH THE REQUIREMENTS OUTLINED IN THE NATIONAL ELECTRIC CODES, THE APPROPRIATE LOCAL CODES, AND OWNER'S STANDARDS. COPPER CABLING SHALL BE LABELED CMP-PLENUM RATED, CM/CMR-RISER RATED. CABLING MUST HAVE THE APPROPRIATE MARKINGS FOR THE ENVIRONMENT IN WHICH IT IS TO BE INSTALLED.

1. HORIZONTAL CABLING SHALL BE INSTALLED IN ONE CONTINUOUS RUN FROM THE TELECOMMUNICATION CLOSET, TO THE TELECOMMUNICATIONS OUTLET. CABLE DROP LENGTH SHALL NOT EXCEED 295-FEET (90-METERS). THIS LENGTH IS MEASURED FROM THE TERMINATION PANEL TO THE OUTLET AND MUST INCLUDE A 10' SERVICE LOOP THAT IS NEATLY COILED AND SECURED ABOVE THE CEILING AT THE OUTLET LOCATION.
2. CABLES SHALL BE INSTALLED IN ACCORDANCE WITH MANUFACTURER RECOMMENDATIONS.
3. CABLE'S MINIMUM BEND RADIUS AND MAXIMUM PULLING TENSION SHALL NOT BE EXCEEDED.
4. HORIZONTAL CABLES ARE TO BE INSTALLED IN CONDUIT/CABLE TRAY. CABLES ARE TO BE ATTACHED USING HOOK & LOOP CABLE TIES. SUPPORTS ARE TO BE INSTALLED AT NO MORE THAN 60" INTERVALS.
5. CABLING SHALL NEVER BE LAID DIRECTLY ON THE CEILING OR GRID. CABLING SHALL NOT BE SUPPORTED BY OR ATTACHED TO EXISTING CABLING, PLUMBING, STEM PIPING, SPRINKLER PIPING, OR ELECTRICAL CONDUIT. CABLE SYSTEM AND SUPPORT HARDWARE SHALL BE INSTALLED SO THAT IT DOES NOT OBSCURE ANY VALVES, FIRE ALARMS, BOXES, OR ANY OTHER CONTROL DEVICES. CABLING SHALL HAVE ITS OWN SUPPORT SYSTEM.
6. HORIZONTAL CABLE BUNDLES SHALL NOT EXCEED GROUPS OF 50 CABLES. BUNDLES ARE TO BE SECURED TO J-HOOKS USING HOOK & LOOP TIES. TIE AND DRESS CABLE RUNS NEATLY. CABLES SHALL BE IDENTIFIED BY A SELF-ADHESIVE LABEL IN ACCORDANCE WITH LABELING SECTION. LABELS ARE TO BE LOCATED BETWEEN 3" AND 6" FROM THE TERMINATION POINT SO THEY CAN BE CLEARLY VIEWED. LABELS ARE TO BE INSTALLED SO THEY CAN BE VIEWED CLEARLY WITHOUT REMOVING THE BUNDLE SUPPORTS AND TIES.
7. CABLES ARE TO MAINTAIN:
   CONDUITS WITH LESS THAN 1 KVA = 6" SEPARATION DISTANCE FROM CABLES
   CONDUITS WITH LESS THAN 5 KVA = 12" SEPARATION DISTANCE FROM CABLES
   CONDUITS GREATER THAN 5 KVA = 36" SEPARATION DISTANCE FROM CABLES
   MOTORS AND TRANSFORMERS = 39" SEPARATION DISTANCE FROM CABLES
   FLUORESCENT LIGHTING = 12" SEPARATION DISTANCE FROM CABLES
8. CONDUIT AND SLEEVE CAPACITIES

	1	1-1/4	1-1/2	2	2-1/2	3	3-1/2	4
CAT 6	7	12	16	27	38	60	81	105

9. ANY CABLE DAMAGED ON EXCEEDING RECOMMENDED INSTALLATIONS PARAMETERS DURING INSTALLATION SHALL BE REPLACED BY THE CONTRACTOR PRIOR TO FINAL ACCEPTANCE AT NO COST TO THE OWNER.
10. THE CABLE JACKET SHALL BE MAINTAINED SO THAT THERE WILL BE NO EXPOSED CONDUCTOR AT THE BACK OF THE TERMINATION POINT FOR CAT 6 CABLING. THE PAIR UNTWIST AT THE TERMINATION SHALL NOT EXCEED 0.125 INCH FOR CAT 6 CABLING.
11. CABLES SHALL BE NEATLY BUNDLED AND DRESSED TO THEIR RESPECTIVE TERMINATION POINT. BEND RADIUS OF THE CABLE IN THE TERMINATION AREA SHALL NOT EXCEED 4 TIMES THE OUTSIDE DIAMETER OF THE CABLE.
12. BEND RADIUS OF THE CABLE DURING INSTALLATION AND AFTER CABLE HAS BEEN SECURED AND DRESSED IN PERMANENT LOCATION SHALL NOT EXCEED 10 TIMES OUTSIDE DIAMETER OF THE CABLE AND 15 TIMES OUTSIDE DIAMETER OF THE CABLE WHEN CABLE IS BEING INSTALLED. PULLING TENSION SHALL NOT EXCEED 25 POUNDS FOR A FOUR-PAIR CABLE.
13. IF PULL LINE IS INSTALLED FOR FUTURE USE, IT MUST BE INSTALLED IN SUCH A MANNER SO AS NOT TO DAMAGE EXISTING CABLES DURING THE USE OF THE PULL LINE. ANY CABLE DAMAGES ARE TO BE REPLACED AT NO COST TO THE OWNER.
14. IF THE INTERIOR OF THE WALLS IS NOT OBSTRUCTED, THE CONTRACTOR SHALL CONCEAL THE CABLING INTERNALLY WITHIN THE WALL. IF SUCH OBSTRUCTIONS EXIST, THE CONTRACTOR SHALL INSTALL AN APPROVED SURFACE MOUNT RACEWAY IN A LOCATION AND MANNER APPROVED BY THE OWNER.
15. ALL DATA AND VOICE CABLING ARE TO BE INSTALLED IN A STAR TOPOLOGY.
16. ALL CABLE PULLS ARE TO BE PULLED BY HAND UNLESS MECHANICAL MEANS BECOMES NECESSARY IN WHICH MAXIMUM TENSILE LOAD APPLIED ON THE CABLE MUST BE MONITORED CONTINUOUSLY AT ALL TIMES. THE LOAD MUST NEVER EXCEED THE MANUFACTURER'S LIMITS.

1.5 WORK AREA OUTLETS

1. UNLESS OTHERWISE NOTED, ALL WORK AREA OUTLETS SHALL CONSIST OF DATA CABLE QUANTITIES INDICATED.
2. OUTLET LOCATIONS WHERE BACK BOXES HAVE BEEN INSTALLED ARE TO BE A MINIMUM OF 2 1/8" DEEP, WITH 1" CONDUIT TO BOX. ALL CONDUITS ARE TO HAVE FIBER BUSHING OR A PLASTIC CAP PROPERLY INSTALLED.
4. BEND RADIUS OF THE CABLE IN THE TERMINATION SHALL NOT BE LESS THAN 4 TIMES THE OUTSIDE DIAMETER OF THE CABLE.
5. THE DATA CABLE JACKET SHALL BE MAINTAINED SO THAT NO CONDUCTORS ARE VISIBLE WHEN THE TERMINATION IS ON JACKS.
6. DATA JACKS, UNLESS OTHERWISE NOTED IN DRAWINGS, SHALL BE LOCATED IN THE TOP POSITION(S) OF EACH FACE PLATE. DATA JACKS IN THE HORIZONTALLY ORIENTED FACE PLATES SHALL OCCUPY THE RIGHT-MOST POSITION(S).
7. VOICE JACKS SHALL OCCUPY THE BOTTOM POSITION(S) ON THE FACEPLATE. VOICE JACKS IN THE HORIZONTALLY ORIENTED FACEPLATES SHALL OCCUPY THE LEFT MOST POSITION(S).
8. EACH CABLE IS TO BE CLEARLY LABELED 1 TO 2 INCHES BEHIND THE TERMINATED JACK, WITH A SELF-ADHESIVE LABEL.
9. ALL TERMINATIONS ARE TO BE 568-B UNLESS OTHERWISE SPECIFIED BY THE OWNER'S I.T. DEPARTMENT. ALL VOICE JACKS WILL BE TERMINATED SO THAT THE BLUE/WHITE PAIR WILL BE TERMINATED ON THE JACK AND ALL OTHER PAIRS SPARED IN THE BOX.
10. CABLES SHALL BE NEATLY BUNDLED AND DRESSED TO THEIR RESPECTIVE PANELS ON BLOCKS TO THE POINT OF THE CABLE ENTRANCE. UNLESS OTHERWISE APPROVED BY THE I.T. DEPARTMENT, HOOK & LOOP CABLE STRIPS OF TIES ARE TO BE USED.
11. CABLES AT ALL HORIZONTAL CROSS CONNECTS ARE TO BE LABELED WITH A SELF-ADHESIVE LABEL 1" TO 4" FROM THE TERMINATION POINT AT THE PANELS ON BLOCKS. LABELS ARE TO BE INSTALLED SO THEY CAN BE CLEARLY VIEWED WITHOUT REMOVING BUNDLE SUPPORTS AND TIES.
12. NO TERMINATION POINTS ON WALL MOUNT TERMINATION OR RACK TERMINATIONS SHALL BE LOWER THAN 18" ABOVE THE FINISHED FLOOR.

1.6 RACKS AND TELECOMMUNICATION CLOSETS

1. AT NO TIME SHALL ANY EQUIPMENT BE INSTALLED SO THAT IT INTERFERES WITH ACCESS TO ELECTRICAL AND MECHANICAL EQUIPMENT. INSTALLATION OF ANY EQUIPMENT SHOULD NOT INTERFERE WITH THE AREA'S EGRESS PATH.
2. SEPARATE TERMINATION FIELDS SHALL BE CREATED AND MAINTAINED FOR DATA AND VOICE, AND BUILDING SERVICE APPLICATIONS.

1.7 FIRE STOPPING

1. ALL PENETRATIONS THROUGH WALL AND FLOORS SHALL BE FIRE STOPPED. FIRE STOPPING SHALL BE ACCOMPLISHED BY USING MATERIALS OF A COMBINATION OF MATERIALS AND DEVICES SUCH AS CAULK, PUTTIES, AND PILLOWS TO MAKE A COMPLETE FIRE STOP.
2. MATERIALS AND MANUFACTURER OF FIRE STOP COMPONENTS MUST BE APPROVED BY THE OWNER.
3. FIRE STOPPING MATERIALS SHALL PROVIDE ADHESION TO EXISTING MATERIALS AND MAINTAIN FIRE AND SMOKE SEAL UNDER NORMAL EXPECTED MOVEMENTS OF EXISTING MATERIALS, CONDUITS, SLEEVES, AND CABLES AS WELL AS HOSE STREAMS.
4. ALL TELECOMMUNICATION SLEEVES SHALL BE SEALED WITH A RE-ENTERABLE SEALANT. CAULK MAY BE UTILIZED AROUND THE OUTER SURFACE OF THE SLEEVE, BUT NOT INSIDE THE SLEEVE. A NON-HARDENING PUTTY SHALL BE USED INSIDE THE SLEEVE.
5. THE CONTRACTOR PERFORMING THE WORK SHALL PROVIDE DOCUMENTATION SHOWING THAT THE EMPLOYEES PERFORMING THE WORK HAVE BEEN PROPERLY TRAINED AND CERTIFIED BY THE MANUFACTURER OF THE FIRE STOP COMPOUNDS USED.

1.8 GROUNDING AND BONDING

1. GROUNDING SHALL CONFORM TO ANSI/TIA/EIA 607 COMMERCIAL GROUNDING AND BONDING REQUIREMENTS FOR TELECOMMUNICATIONS.
2. GROUNDING OF RACKS AND RACEWAYS TIE TOGETHER AT A SINGLE POINT THAT IS CONNECTED TO THE BUILDING GROUND SYSTEM.
3. A LICENSED ELECTRICAL CONTRACTOR SHALL PERFORM INSTALLATION AND TERMINATION OF ALL GROUNDING AND BONDING.

1.9 LABELING

1. LABELS SHALL BE SELF-ADHESIVE AND BE INSTALLED AT EACH END OF THE CABLE CLEARLY VISIBLE.
2. ALL FACE PLATES AND PATCH PANELS SHALL BE LABELED CLEARLY WITH A LABEL MAKER DESIGNED FOR THE APPLICATION. HAND WRITTEN LABELS ON CABLE I.D. MARKER WILL NOT BE PERMITTED FOR PERMANENT USE.
3. A MINIMUM OF 1/8" HIGH CHARACTERS WILL BE PERMITTED.
4. DATA CABLE I.D.'S WILL BE AS FOLLOWS:
   EX: SW1-001-002
   SWI = CLOSET I.D.
   001 = FIRST CABLE, NUMBER MINIMUM THREE CHARACTERS
   002 = SECOND CABLE, NUMBER MINIMUM THREE CHARACTERS

1.10 TESTING AND ACCEPTANCE

1. ALL CABLES AND TERMINATION HARDWARE SHALL BE 100% TESTED FOR DEFECTS. ALL CABLES AND TERMINATION HARDWARE SHALL BE 100% FAULT FREE AND MEET OR EXCEED PERFORMANCE STANDARDS. IF CABLE, OR TERMINATION HARDWARE IS FOUND DEFECTIVE, THEY WILL BE REPLACED AT THE EXPENSE OF THE CONTRACTOR.
2. ALL CABLE SHALL BE WIRE MAP TESTED BEFORE TURNING CABLE OVER TO THE OWNER'S TELECOM DEPARTMENT. TESTING SHALL CONFIRM CONTINUITY AND CHECKED FOR PAIR REVERSALS, SPLIT PAIRS, MIS WIRES, AND BE FREE OF SHORTS OR OPENS.
3. ALL CROSS CONNECT WIRING AND STATION EXTENSION ASSIGNMENTS WILL BE DONE BY THE INSTALLING CONTRACTOR.
4. THE TEST EQUIPMENT USED BY THE CONTRACTOR MUST BE APPROVED BY THE OWNER. THE CONTRACTOR SHALL FURNISH THE TEST RESULTS FOR ALL COPPER CAT 6 CABLING IN ELECTRONIC FORM ON A CD-ROM DISK. THE CONTRACTOR SHALL PROVIDE A LICENSED COPY OF THE SOFTWARE REQUIRED TO VIEW AND PRINT THE DATA.
5. THE TEST RESULTS FOR COPPER CABLING SHALL BE COMPLETE, SORTED, PRESENTED BY CABLING I.D. NUMBERS, BUILDING AND LOCATION. ALL TEST RESULTS SHALL INDICATE A PASS RESULT.
6. THE TEST RESULTS SHALL INCLUDE A RECORD OF THE TEST FREQUENCIES, CABLE TYPE, MANUFACTURER, CABLE I.D., TEST EQUIPMENT TYPE, TIME AND DATE, CONTRACTOR NAME, AND INDIVIDUAL WHO PERFORMED THE TEST,
7. TESTING OF CAT 6 CABLE WILL BE PERFORMED TO MEET ALL ANSI TIA/EIA 568A, 568B, TSB 40A, AND TSB 67 STANDARDS.
8. TESTING OF CAT 6 COPPER TWISTED PAIR WILL SHOW AND INDICATE TEST RESULTS FOR THE FOLLOWING:
   - WIRE MAP, LENGTH, ATTENUATION, NEXT, PSNNEXT, ELFEXT, PSELFEXT, ACR, PSACR, RETURN LOSS, PROPAGATION DELAY, DELAY SKEW, RESISTANCE, AND LENGTH.
9. THE CONTRACTOR SHALL PROVIDE THE I.T. DEPARTMENT WITH A CLEAN PRINT DETAILING CABLE PATHWAYS, PENETRATIONS, OUTLET LOCATIONS, AND IDENTIFICATIONS UPON COMPLETION.

1.11 MISCELLANEOUS

1. THE CONTRACTOR MAY NOT MAKE ANY SUBSTITUTIONS OF MATERIAL OR CHANGE TO THE INSTALLATION PROCESS OF THE ORIGINAL SCOPE OF THE PROJECT WITHOUT PRIOR APPROVAL FROM THE OWNER.
2. THE CONTRACTOR SHALL SUPPLY COPPER PATCH CORDS FOR ALL PROJECTS BASED ON THE FOLLOWING CALCULATIONS:
   - 2 PATCH CORDS FOR 2/3. THE TOTAL NUMBER OF DATA CABLES.
   - THE TOTAL NUMBER OF PATCH CORDS WILL THEN BE DIVIDED BY 2; THAT NUMBER WILL DETERMINE THE NUMBER OF PATCH CORDS.

   EXAMPLE: -300 DATA DROPS X 2/3 = 200 X 2 = 400
   400 / 2 = 200
   -THIS ANSWER LEADS TO: 200-3' PATCH CORDS
   200-5' PATCH CORDS
3. THE APPROVED TYPE OF DATA CABLING AND JACKET COLOR OF ALL CABLING INSTALLED IN THE OWNER'S FACILITIES WILL BE AS FOLLOWS:
   - CAT 6 DATA – BLUE: PANDUIT
   - CAT 6 VOICE – WHITE: PANDUIT
   - CAT 6 ACCESS POINT – BLUE: PANDUIT
4. ALL TERMINATION JACKS COLORS WILL BE AS FOLLOWS:
   - CAT 6: BLUE
   - CAT 6 VOICE – WHITE: PANDUIT
   - CAT 6 ACCESS POINT – BLUE: PANDUIT
5. ALL PATCH CORD COLORS WILL BE AS FOLLOWS:
   - CAT 6: BLUE
6. ALL CONTRACTORS SHALL BE IN COMPLIANCE WITH OSHA REGULATIONS THOUGH THE DURATION OF THE PROJECT.

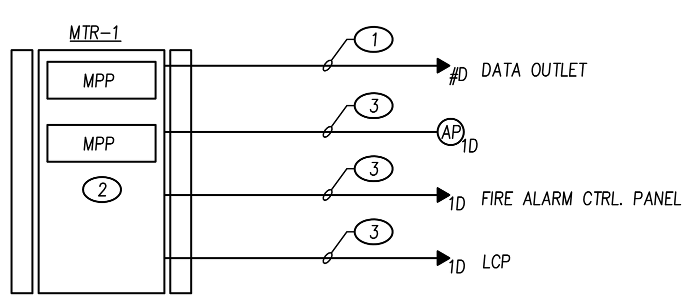

1 TELECOMMUNICATIONS RISER DIAGRAM
SCALE: NONE

TELECOMMUNICATION RISER DIAGRAM GENERAL NOTES:

1. ALL CABLING SHALL BE PLENUM RATED CATEGORY 6 COLORED AS FOLLOWS:
   A. DATA CABLE – BLUE
   B. ACCESS POINT CABLE – YELLOW
2. THE RISER DIAGRAM IS SCHEMATIC AND IS NOT INTENDED TO INDICATE ACTUAL ROUTINGS OR QUANTITIES OF MATERIALS REQUIRED.
3. REFER TO PLANS FOR QUANTITY OF CABLES AND JACKS TO BE INSTALLED AT EACH DATA OUTLET LOCATION.
4. COORDINATE EXACT QUANTITIES OF PATCH PANELS.
8. SEE THIS SHEET AND THE SPECIFICATIONS FOR CABLING AND TESTING REQUIREMENTS.
9. ALL COMMUNICATIONS GROUNDING CONDUCTORS SHALL BE IN CONDUIT.
10. CABLING ROUTED OPEN ABOVE ACCESSIBLE CEILINGS SHALL NEVER BE LAID DIRECTLY ON THE CEILING OR GRID. CABLING SHALL NOT BE SUPPORTED BY OR ATTACHED TO OTHER CABLING, PLUMBING PIPING, DUCTWORK OR ELECTRICAL CONDUIT. CABLE SYSTEM AND SUPPORT HARDWARE SHALL BE INSTALLED SO THAT IT DOES NOT OBSCURE ANY VALVES, FIRE ALARMS, BOXES, OR ANY OTHER CONTROL DEVICES. CABLING SHALL HAVE ITS OWN SUPPORT SYSTEM.

TELECOMMUNICATIONS RISER DIAGRAM - KEYED NOTES

(1) 23 GAUGE, 4-PAIR, CATEGORY 6, UNSHIELDED TWISTED PAIR CABLES. '#D' INDICATES THE QUANTITY OF TERMINATED AND TESTED DATA CABLES FOR EACH OPENING. SEE PLANS FOR QUANTITIES REQUIRED AT EACH LOCATION.

(2) FURNISH AND INSTALL MODULAR PATCH PANELS AS REQUIRED TO ACCOMMODATE THE NEW CABLING.

(3) ONE EACH 23 GAUGE, 4-PAIR, CATEGORY 6, UNSHIELDED TWISTED PAIR CABLE.

TELEPHONE AND DATA EQUIPMENT SCHEDULE

ITEM	SYMBOL	DESCRIPTION	MANUFACTURER
1	MTR-1 DATA RACK AND ACCESSORIES	MAIN TELECOMMUNICATIONS RACK. FURNISH AND INSTALL ONE FREE STANDING FOUR POST, 19" X 29" DEEP X 48" HIGH WALL-MOUNT RACK. INCLUDE MODULAR PATCH PANELS AS REQUIRED FOR THE TERMINATION OF ALL HORIZONTAL STATION CABLING. INCLUDE VERTICAL AND HORIZONTAL CABLE MANAGEMENT. WITH GROUNDING KIT FOR CONNECTION TO TGB-1. FURNISH AND INSTALL CATEGORY 6 PATCH CORDS. REFER TO TELECOMMUNICATIONS SPECIFICATIONS SHEET FOR FORMULA REGARDING LENGTHS AND ASSOCIATED QUANTITIES. REVIEW PART NUMBERS AND DESCRIPTIONS AND INCLUDE A COMPLETE AND OPERATIONAL TESTED TURNKEY SYSTEM. COORDINATE ALL WORK WITH THE OWNER'S IT REPRESENTATIVE PRIOR TO INSTALLATION.	RACK: PANDUIT SIEMONS GREAT LAKES CHATSWORTH PATCH PANELS PANDUIT CPPL24WBLY OR EQUIVALENT CONNECTORS CJ688TGYL OR EQUIVALENT
2	TELE-DATA OUTLET ▼	TELECOMMUNICATIONS VOICE/DATA OUTLET. CONCEAL ALL OPENINGS RECESSED IN WALL. RECESS MOUNTED OPENINGS SHALL CONSIST OF ONE 4-11/16" SQUARE, 2-1/8" DEEP BACK BOX WITH A SINGLE GANG DEVICE RING, AND ONE 1" CONDUIT ROUTED TO ABOVE THE NEAREST ACCESSIBLE CEILING. COVER PLATE SHALL CONSIST BE A MODULAR FOUR PORT CONFIGURATION. ALL UNUSED PORTS SHALL HAVE REMOVABLE BLANKS INSERTED FOR FUTURE USE. DATA OUTLETS TO BE PROVIDED IN THE OPENING. EACH JACK SHALL BE A BLUE RJ-45 CATEGORY 6 OUTLET. ALL DATA CABLING SHALL BE BLUE CATEGORY 6 PLENUM RATED FOUR PAIR UTP. ALL CABLES SHALL BE TERMINATED TO A NEW PATCH PANEL IN THE EXISTING 3RD FLOOR SOUTH ELECTRICAL/COMMUNICATIONS ROOM. CABLING MAY BE ROUTED OPEN ABOVE ACCESSIBLE CEILINGS. ALL OPEN CABLING SHALL BE PER OWNER STANDARDS. EXPOSED CABLING IN FINISHED AREAS IS NOT PERMITTED. OPEN CABLING IN ALL SPACES EXCEPT THE IT CLOSET SHALL BE IN CONDUIT.	COVER PLATE MATCH ELECTRICAL DEVICE COVERPLATES BLANKS PANDUIT CMBWH CONNECTORS PANDUIT CJ688TGBL CABLE PANDUIT PUP6004BL-UY J-HOOKS PANDUIT JP2W-L20 PANDUIT JP4W-X20 HOOK AND LOOP TAPE PANDUIT TTS-20RO
3	(AP)	FUTURE TELECOMMUNICATIONS WIRELESS ACCESS POINT FURNISHED BY OWNER, INSTALLED AND WIRED BY THE ELECTRICAL CONTRACTOR. FURNISH AND INSTALL ONE EACH DATA CABLE TERMINATED ON EACH END TO EACH LOCATION. LEAVE 5'-0" SLACK AT JUNCTION BOX. COORDINATE ALL WORK WITH THE FUTURE TENANT'S IT DEPARTMENT PRIOR TO INSTALLATION.	INSTALLED, TERMINATED AND TESTED BY THE E.C..
4	MPP	DATA CABLING MODULAR PATCH PANEL. MINIMUM 24-PORT, FLUSH MOUNT FLAT PLATE TYPE. FURNISH QUANTITY AS REQUIRED IN MTR-1 TO ACCOMMODATE ALL STATION CABLING FROM AREA WALL OUTLETS. PROVIDE 50% SPARE CAPACITY IN THE MODULAR PATCH PANELS. REFER TO PLANS FOR QUANTITIES OF CABLES. A MINIMUM OF ONE PATCH PANEL PER FLOOR IS REQUIRED. SEE PLANS AND SPECIFICATIONS FOR ADDITIONAL INFORMATION.	PANDUIT CPPA48FMWBLY
5	TGB-1	MAIN TELECOMMUNICATIONS GROUND BAR. HIGH CONDUCTIVITY COPPER AND TIN-PLATED TO INHIBIT CORROSION. ¼"x2"x12" PRE-ASSEMBLED WITH BRACKETS AND INSULATORS ATTACHED. SEE DRAWINGS FOR QUANTITIES, LOCATIONS, AND ADDITIONAL WORK REQUIRED.	PANDUIT GB2B0306TPI-1 OR EQUAL
6	TTB-1	TELEPHONE TERMINAL BOARD FURNISH AND INSTALL ONE 4' X 8' X 3/4" FIRE RATED PLYWOOD. PROVIDE TWO COATS OF FIRE RESISTANT WHITE PAINT. MOUNT HORIZONTALLY TO WALL SUCH THAT TOP OF PLYWOOD IS 60" ABOVE FINISHED FLOOR.	

ALTERNATE MANUFACTURER BID CONSIDERATION:

PANDUIT WAS USED AS THE BASIS OF DESIGN. ALTERNATE MANUFACTURER BIDS WILL BE CONSIDERED FOR SIEMON, HUBBELL, SYSTIMAX OR UNIPRISE SOLUTIONS.

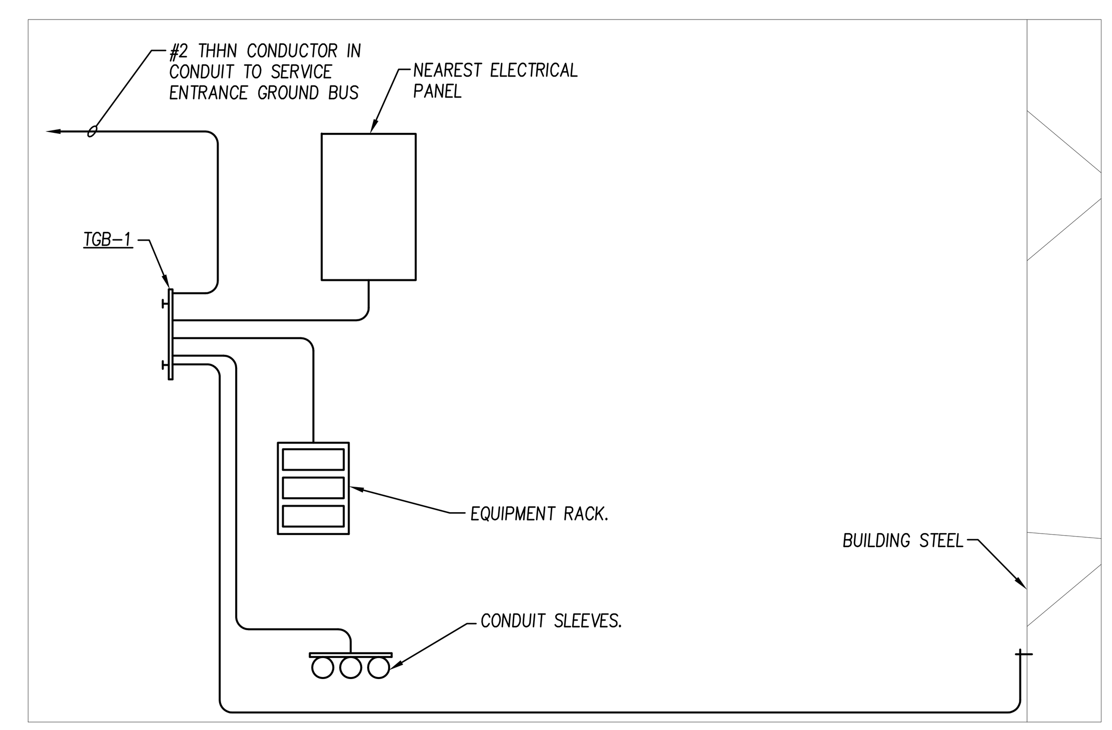

2 TYPICAL COMMUNICATIONS EQUIPMENT GROUNDING DETAIL
SCALE: NONE

NOTES:

1. ALL CONDUCTORS IN THIS GROUNDING RISER SHALL BE #6 AWG COPPER CONDUCTORS (GREEN) UNLESS DISTANCE IS GREATER THAN 12 FEET.
2. GROUNDING DETAIL IS DIAGRAMMATIC, REFER TO ENLARGED PLANS FOR QUANTITIES AND LOCATION OF EQUIPMENT.

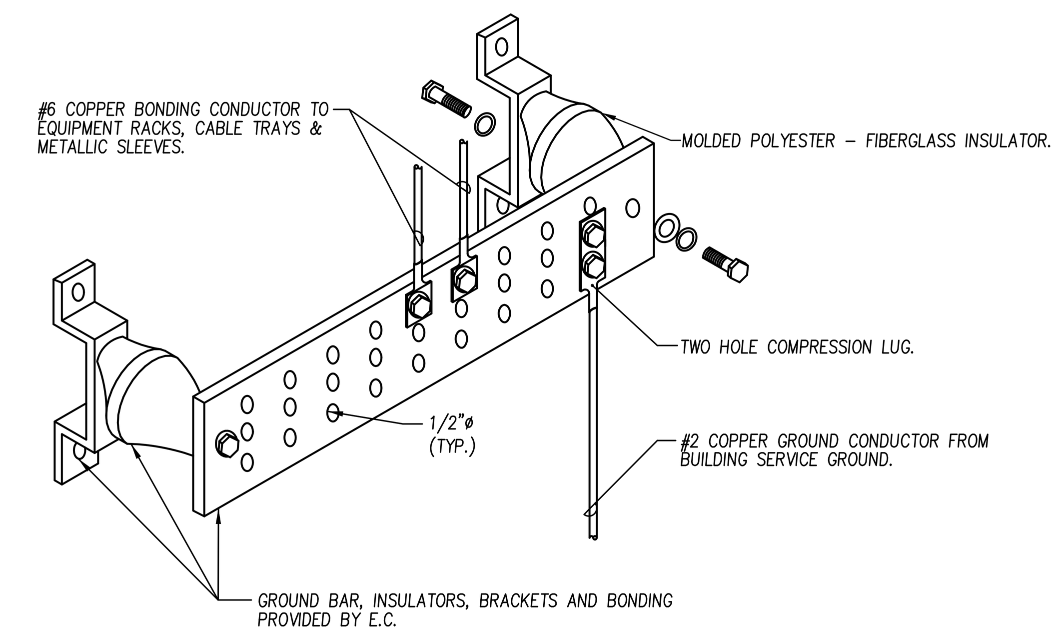

3 TGB-1 GROUND BAR DETAIL
SCALE: NONE

NOTES:

1. MOUNT BAR AT +24" A.F.F.

apaceDesign
architects engineers designers
apaceDesign 2112 East War Memorial Drive Peoria Illinois 61614 t:309.685.4722 f:309.685.4784 www.apaceDesign.com

KED
KEITH ENGINEERING DESIGN, INC.
208 S. FIRST ST. MORTON, IL 61550
PH. 309-938-4005 FAX 309-214-0063

TELE-DATA SPECIFICATIONS AND DETAILS

Peoria PlayHouse Children's Museum
Peoria Park District
Glen Oak Park Pavillion
Peoria, IL 61603

LICENSED PROFESSIONAL ENGINEER BRIAN R. KEITH 062-050306 EXPIRES: 30NOV15 STATE OF ILLINOIS
DATE: 03/19/2014

NO.	ISSUE	DATE
1	Bidding Documents	3.19.14

DATE 3.19.2014	PROJECT NO. 24905.02
DRAWN BY DRJ	SHEET
CHECKED TDC	E301
APPROVED BRK	16 OF 20

CODE

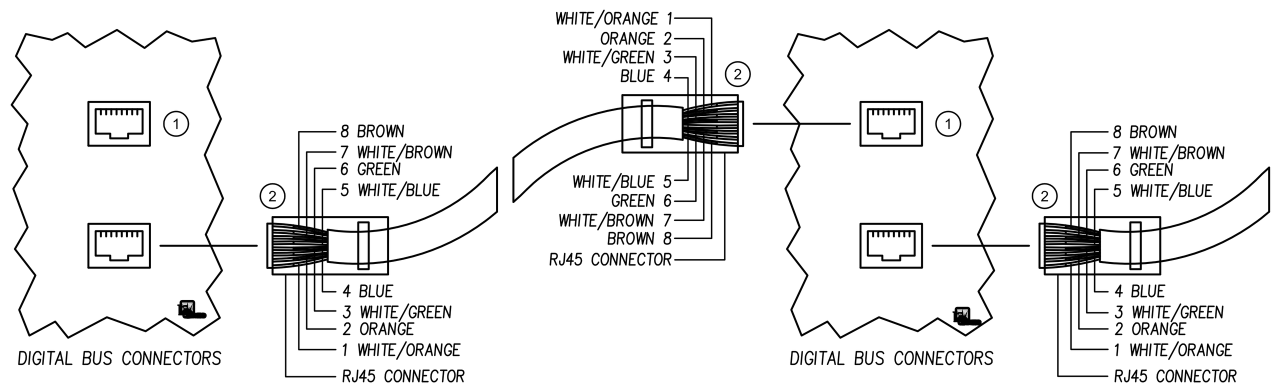

(1) RJ45 DIGITAL BUS CONNECTORS ARE LOCATED ON EVERY DIGITAL DEVICE (DIGITAL DEVICES ARE DEFINED AS: RELAY PANELS, DIGITAL SWITCHES AND ALL DIGITAL ACCESSORIES).

(2) RJ45 CONNECTORS USE THE SAME COLOR CODING AS ETHERNET, AND ARE MADE AS STRAIGHT THROUGH CABLES. CROSS OVER CABLES WILL CAUSE SYSTEM FAILURE. ALL CABLES SUPPLIED BY CONTRACTOR.

NOTES:
1. DAISY-CHAIN CAT. 5 PATCH CABLE WITH RJ45 CONNECTORS FROM DIGITAL DEVICE TO DIGITAL DEVICE.
2. REFER TO MANUFACTURERS INSTRUCTIONS FOR LONG DISTANCE RUNS BETWEEN DIGITAL DEVICES.
3. UP TO 4,000 FT TOTAL BUS LENGTH.
4. CRIMP AND TEST EACH CABLE WITH A LAN CIRCUIT TESTER PRIOR TO INSTALLATION.

1 TYPICAL LOW VOLTAGE NETWORK HOOK UP
SCALE: NONE

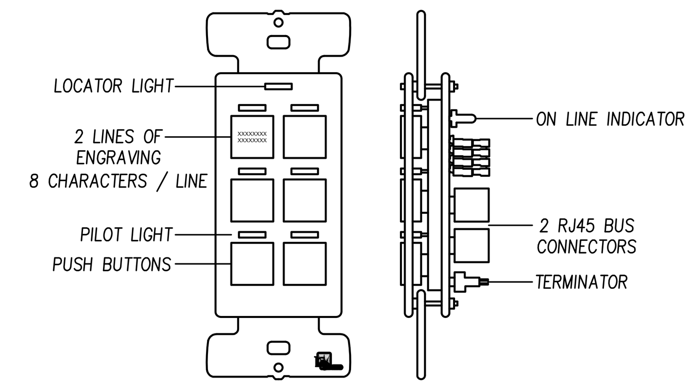

NOTES:
1. SWITCH BUTTONS ARE FACTORY ENGRAVED.
2. PUSH BUTTONS MAY CONTROL ANY RELAY(S) IN ANY COMBINATION.
3. LED PILOT LIGHTS INDICATE STATUS.
4. SWITCH LINKED TO THE GR 2400 DIGITAL BUS VIA CAT. 5 PATCH CABLE WITH RJ45 CONNECTORS.
5. DECORA STYLE FACE PLATE BY CONTRACTOR.

2 $L# DIGITAL SWITCH
SCALE: NONE

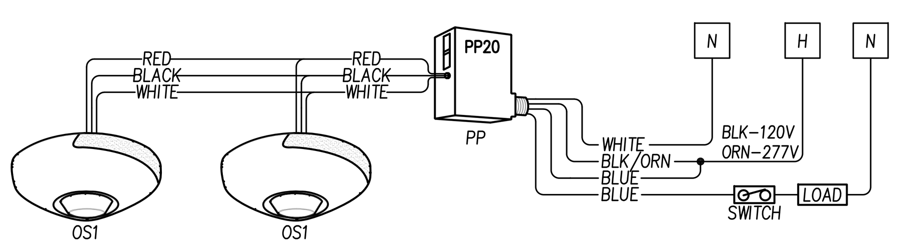

3 TYPICAL (PP)/(OS1) CONTROL WIRING DIAGRAM
SCALE: NONE

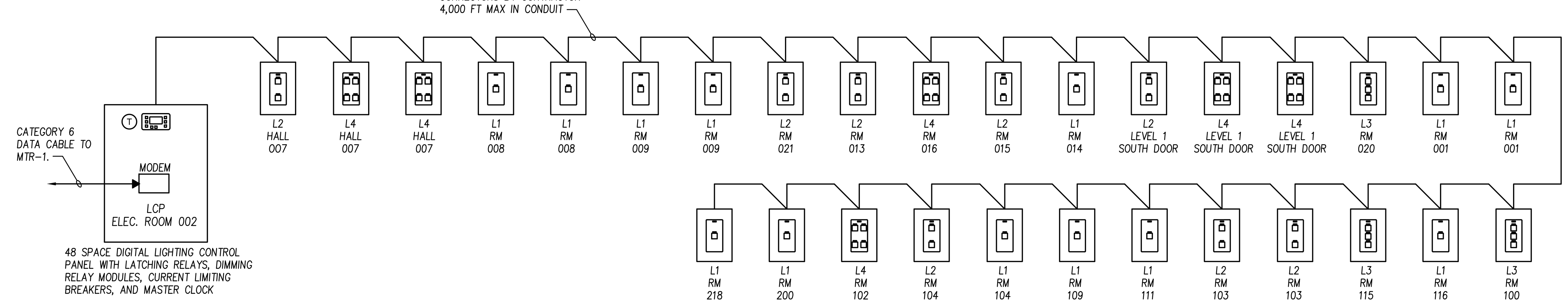

48 SPACE DIGITAL LIGHTING CONTROL PANEL WITH LATCHING RELAYS, DIMMING RELAY MODULES, CURRENT LIMITING BREAKERS, AND MASTER CLOCK

4 TYPICAL LOW VOLTAGE SINGLE LINE DIAGRAM
SCALE: NONE

	RELAY	CIRCUIT	LOCATION & DESCRIPTION	LOAD	CONTROLLED BY
	1	B-22	ART ROOM 001 'F2'	FLUOR	L1, L1
	2	B-22	PROGRAM ROOM B 008 'F2'	FLUOR	L1, L1
	3	B-22	PROGRAM ROOM A 009 'F2'	FLUOR	L1, L1
	4	B-26	WATER 020 'PG' DIM LED	LED	L3
	5	B-26	WATER 020 'GA', 'GA-1' DIM LED	LED	L3
	6	B-26	WATER 020 'SB' LED SIGN	LED	L3
	7	B-24	GENERAL 'F3' DIM LED	LED	–
	8	B-24	GENERAL 'PM'	–	–
L	9	B-36	TOT SPOT 021 TRACK DIM LED	–	–
L	10	B-36	TOT SPOT 021 TRACK DIM LED	–	–
	11	B-28	TOT SPOT 021 'PJ'	–	–
	12	B-28	TOT SPOT 021 'PH'	–	–
	13	B-28	FACE PAINT 013 'PK', 'RB'	–	–
L	14	B-42	ELEVATOR 019 TRACK DIM LED	–	–
L	15	B-34	STAIR TRACK 'TA' DIM LED	–	–
L	16	B-34	TOT SPOT 021 TRACK 'TC' DIM LED	–	–
L	17	B-38	MOTION COMMOTION 018 TRACK DIM LED	–	–
L	18	B-38	MOTION COMMOTION 018 TRACK DIM LED	–	–
L	19	B-40	MOTION COMMOTION 018 TRACK DIM LED	–	–
L	20	B-40	MOTION COMMOTION 018 TRACK DIM LED	–	–
	21	B-30	MOTION COMMOTION 018 'PQ'	–	–
L	22	B-44	TRAIN 022 TRACK 'TA' DIM LED	–	–
L	23	B-44	TRAIN 022 TRACK 'TC' DIM LED	–	–
L	24	B-46	PEORIA 016 TRACK 'TA' DIM LED	–	–
L	25	B-46	PEORIA 016 TRACK 'TA' DIM LED	–	–
L	26	B-48	FACE PAINT 013 TRACK 'TA' DIM LED	–	–
L	27	B-50	PEORIA 016 TRACK 'TA' DIM LED	–	–
L	28	B-50	MINE CONTROL 014 TRACK 'TA' DIM LED	–	–
L	29	B-52	SCIENCE 015 TRACK 'TA' DIM LED	–	–
	30	B-28	SCIENCE 015 'PL' DIM LED	–	–
	31	B-32	TRAIN 022 'PK'	–	–
	32	B-54	STAIR 101 'F3' DIM LED	–	–
	33	B-54	RETAIL 104 'F2'	–	–
	34	B-56	TREE (LOWER) 'PP' DIM LED	–	–
	35	B-56	TODDLER 110 'WB', 'PF', 'LA'	–	–
	36	B-56	REAL BUILDING 107 'LA', 'PF', 'RA'	–	–
	37	B-56	SAND PORCH 109 'SD'	–	–
	38	B-58	CH. COOP/BARN 116 'PD'	–	–
	39	B-58	BARN 116 'PD'	–	–
	40	B-58	BARN 116 'WA'	–	–
	41	B-60	HOUSE 100 'SC' DIM LED	–	–
	42	B-60	HOUSE 100 'PB', 'SA' DIM LED	–	–
L	43	B-60	TRACK 'TLV' DIM LED	–	–
	44	B-62	MEZZ 200 'PF'	–	–
	45	B-62	UPPER EXHIB. 'PA'	–	–
	46	B-62	UPPER EXHIB. 'PA'	–	–
	47	B-62	UPPER TREE 'PP'	–	–
	48	B-62	QUIET PLACE 'PC', 'WC'	–	–

L – CURRENT LIMITER BREAKER

5 LCP PANEL SCHEDULE
SCALE: NONE

NOTES:

1. COORDINATE ALL PROGRAMMING OF INDIVIDUAL SWITCHES WITH OWNER DURING INSTALLATION. INCLUDE TIME IN QUOTATION TO MEET WITH OWNER'S REPRESENTATIVE AND PROGRAM SWITCH PRESETS PER THE OWNER'S DIRECTION.
2. COORDINATE WITH LIGHT FIXTURE MANUFACTURERS AND SUPPLIER(S) TO ENSURE PROPER COMPATIBILITY WITH ALL FIXTURES BEING DIMMED. OBTAIN COMPLETE FIXTURE INFORMATION FROM BIDDING CONTRACTOR, PRIOR TO SUBMITTING CONTROL SYSTEM QUOTE.
3. THE SYSTEM SHALL BE COMPLETE AND OPERATIONAL PRIOR TO CLOSE-OUT.

SPECIFICATION – LIGHTING CONTROL SYSTEM

1. LIGHTING CONTROL SYSTEM SHALL BE DIGITAL (COMMUNICATIONS BASED) AND CONSIST OF AN LCP WITH 48 INDIVIDUAL RELAYS AND DIMMERS, (21) 5 AMP CURRENT LIMITING BREAKERS, DIGITAL SWITCHES (RS-485) AND DIGITAL INTERFACE CARDS. MULTIPLE SMALLER NETWORKED CONTROL PANELS MAY BE USED. ALL SYSTEM COMPONENTS SHALL CONNECT AND BE CONTROLLED VIA A SINGLE CATEGORY 5, 4 PAIR TWISTED, STRANDED CABLE PROVIDING REAL-TIME TWO-WAY COMMUNICATION WITH EACH SYSTEM COMPONENT. ANALOG SYSTEMS (CONTACT CLOSURE BASED) SHALL NOT BE ACCEPTABLE.
2. RELAY PANELS SHALL BE PRE-WIRED, PRE-ASSEMBLED, PRE-PROGRAMMED AND ETL LISTED TO UL 916. PANELS SHALL BE PROVIDED WITH A SWITCH SELECTABLE POWER SUPPLY (277/120/OFF) AND 16 GAGE BARRIERS TO SEPARATE 120V, 277V AND LOW VOLTAGE. NORMAL AND EMERGENCY POWER SHALL BE IN SEPARATE ENCLOSURES.
3. RELAYS SHALL HAVE NORMALLY CLOSED (NC) CONTACTS RATED FOR 120/277V 20A TUNGSTEN, BALLAST, OR HID. STANDARD RELAYS SHALL BE ZERO-CROSS TYPE. OPTIONAL 600V, 2-POLE RELAYS SHALL BE AVAILABLE.
4. ALL LED LIGHTING CIRCUITS SHALL BE CONTROLLED BY SOFTSTART NC RELAYS. NO EXCEPTIONS.
5. RELAY PANEL ELECTRONICS SHALL PROVIDE VISUAL STATUS AND MANUAL CONTROL OF EACH RELAY. ALL SYSTEM CONTROL ELECTRONICS SHALL STORE PROGRAMMING IN NON-VOLATILE MEMORY WITH 200 YEAR MEMORY RETENTION (AND A 10 YEAR 'TIME OF DAY' MEMORY).
6. LIGHTING CONTROL SYSTEM SHALL CONSIST OF MASTER PANEL CONTROLLED BY A MULTI-CHANNEL DIGITAL TIME CLOCK (DTC) THAT CONTROLS AND PROGRAMS THE ENTIRE LIGHTING CONTROL SYSTEM. THE DTC SHALL SUPPLY ALL TIME FUNCTIONS AND ACCEPT INTERFACE INPUTS. THE DTC SHALL ACCEPT CONTROL LOCALLY USING BUILT IN BUTTON PROMPTS AND USE OF AN LED OR LCD CHARACTER DISPLAY, OR FROM A COMPUTER OR MODEM VIA AN ON-BOARD RS-232 PORT. ALL COMMANDS SHALL BE IN PLAIN ENGLISH. HELP PAGES SHALL DISPLAY ON THE DTC SCREEN.
7. ALL SWITCHES SHALL COMMUNICATE VIA RS-485. CONTACT CLOSURE STYLE SWITCHES ARE NOT ACCEPTABLE. ANY SWITCH BUTTON FUNCTION SHALL BE ABLE TO BE CHANGED LOCALLY (AT THE DTC OR A SERIALLY CONNECTED PC) OR REMOTELY, VIA DIAL-UP MODEM, ETHERNET, OR INTERNET. REFER TO SINGLE LINE DIAGRAM FOR WIRING DETAILS.
8. PHOTOCELL, EXTERIOR (PCO) OR INTERIOR (PCI), SHALL PROVIDE READ-OUT ON THE DTC SCREEN IN NUMERIC VALUES ANALOGOUS TO FOOT-CANDLES. EACH PHOTOCELL CARD SHALL PROVIDE A MINIMUM OF 14 TRIGGER POINTS. EACH TRIGGER MAY BE PROGRAMMED LOCALLY OR REMOTELY TO CONTROL ANY RELAY(S) OR ZONE(S) IN ANY PANEL(S). PHOTOCELLS THAT REQUIRE THE USE OF SET SCREWS OR MANUAL ADJUSTMENTS AT THE PHOTOCELL OR CONTROL CARD SHALL NOT BE ACCEPTABLE.
9. LIGHTING CONTROL SYSTEM INTERFACES TO INCLUDE A DRY-CONTACT INPUT INTERFACE, BAS INTERFACE (RS 232 OR RS 485), DIMMING SYSTEM INTERFACE (RS 232) AND ETHERNET. VERIFY AND INSTALL ONLY THOSE INTERFACES INDICATED ON THE PLANS.
10. STANDARD LIGHTING CONTROL SYSTEM SOFTWARE, PRE-INSTALLED INTO THE DTC, SHALL CONSIST OF AND USE STANDARD INTERACTIVE GRAPHICAL PAGES. SOFTWARE SHALL PROVIDE VIA LOCAL OR REMOTE PC A VISUAL REPRESENTATION OF EACH DEVICE ON THE BUS, SHOW REAL TIME STATUS AND THE ABILITY TO CHANGE THE STATUS OF ANY INDIVIDUAL DEVICE, RELAY OR ZONE. OPTIONAL SOFTWARE THAT ACCEPTS JOB SPECIFIC GRAPHICS SHALL BE AVAILABLE. NO EXCEPTIONS.
11. START UP: EC SHALL CONTACT LIGHTING CONTROL MANUFACTURER AT LEAST 7 DAYS BEFORE TURNOVER OF PROJECT. LIGHTING CONTROL MANUFACTURER MAY REMOTELY DIAL INTO THE LIGHTING CONTROL SYSTEM, RUN DIAGNOSTICS AND CONFIRM SYSTEM PROGRAMMING. EC SHALL BE AVAILABLE AT THE TIME OF DIAL IN TO PERFORM ANY CORRECTIONS REQUIRED BY MANUFACTURER. EC IS RESPONSIBLE FOR COORDINATING WITH GC AND THE OWNER THE INSTALLATION OF A DEDICATED TELEPHONE LINE OR A SHARED PHONE LINE WITH AN A/B SWITCH. PHONE JACK TO BE MOUNTED WITHIN 12" OF MASTER LCP. LABEL JACK WITH PHONE NUMBER. EC TO CONNECT PHONE LINE FROM JACK TO MASTER LCP. NO EXCEPTIONS.
12. TELEPHONE FACTORY SUPPORT SHALL BE AVAILABLE AT NO ADDITIONAL COST TO THE EC OR OWNER BOTH DURING AND AFTER THE WARRANTY PERIOD. FACTORY TO PRE-PROGRAM THE LIGHTING CONTROL SYSTEM PER PLANS AND APPROVED SUBMITTAL. THE LIGHTING CONTROL MANUFACTURER, AT NO ADDED COST, SHALL PROVIDE ADDITIONAL PROGRAMMING VIA MODEM OR INTERNET AS REQUIRED BY THE EC OR OWNER FOR THE OPERATIONAL LIFE OF THE SYSTEM. MANUFACTURER WARRANTS THAT BOTH THE SYSTEM FIRMWARE AND SOFTWARE CAN BE UPGRADED AND MONITORED REMOTELY. UPON REQUEST MANUFACTURER TO PROVIDE REMOTE DIAL UP SOFTWARE AND ALL FUTURE FIRMWARE UPDATES TO SYSTEM OWNER. NO EXCEPTIONS.
13. SHOP DRAWINGS SUBMITTED BY MANUFACTURER SHALL BE JOB SPECIFIC, INCLUDING PANEL, SWITCH AND TIME CLOCK SCHEDULES, SINGLE LINE DRAWINGS, AND SHALL BE AVAILABLE IN BOTH ELECTRONIC AND HARD COPY FORMAT. SUBMITTALS WHICH CONSIST OF TYPICAL SINGLE LINE DRAWINGS OR GENERAL PROGRAMMING INFORMATION SHALL NOT BE ACCEPTABLE.

apaceDesign
architects engineers designers
apaceDesign 2112 East War Memorial Drive Peoria Illinois 61614 t:309.685.4722 f:309.685.4784 www.apaceDesign.com

KEITH ENGINEERING DESIGN, INC.
208 S. FIRST ST. MORTON, IL 61550
PH. 309-938-4005 FAX 309-214-0063

LIGHTING CONTROL SCHED., DETAILS, DIAGRAMS

Peoria PlayHouse Children's Museum
Peoria Park District
Glen Oak Park Pavillion
Peoria, IL 61603

LICENSED PROFESSIONAL ENGINEER BRIAN R. KEITH 062-050306 EXPIRES: 30NOV15 STATE OF ILLINOIS
DATE: 03/19/2014

NO.	ISSUE	DATE
1	Bidding Documents	3.19.14

DATE 3.19.2014 | PROJECT NO. 24905.02
DRAWN BY DRJ
CHECKED TDC
APPROVED BRK
CODE
SHEET E302
17 OF 20

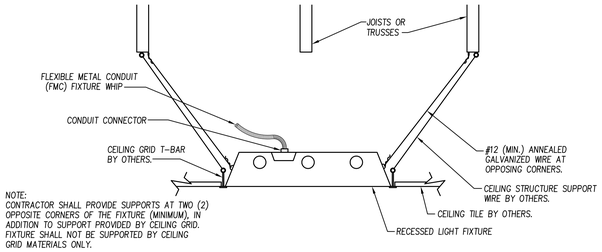

1 RECESSED TROFFER MOUNTING DETAIL

SCALE: NONE

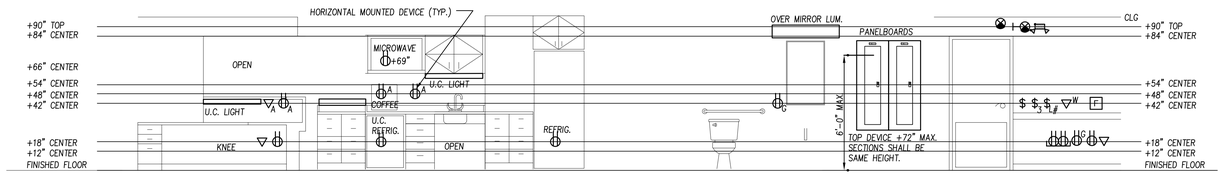

2 TYPICAL ELECTRICAL MOUNTING HEIGHTS

SCALE: NONE

NOTES:

1. TYPICAL MOUNTING HEIGHT, UNLESS NOTED OTHERWISE ON PLANS. VERIFY WITH OTHER CONTRACTORS PRIOR TO START OF ROUGH-IN.

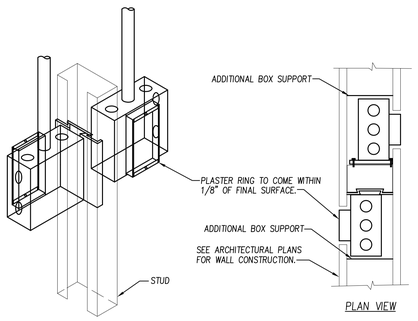

3 DEVICE OPENINGS SIDE BY SIDE DETAIL

SCALE: NONE

NOTES:

1. HORIZONTAL CONDUIT CONNECTION BETWEEN BOXES LESS THAN 2'-0" NOT PERMITTED. SEE SPECIFICATIONS AND DRAWING NOTES FOR ADDITIONAL SPACE REQUIREMENTS BETWEEN DEVICES.
2. ALL BACK BOXES SHALL BE A MINIMUM 2-1/8" DEEP.

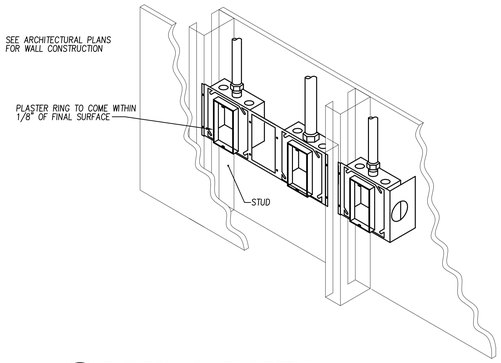

4 BACKBOX MOUNTING DETAIL

SCALE: NONE

NOTES:

1. THE INTENT OF THE DETAIL IS TO ENSURE DEVICE ROUGH-INS ARE SOLIDLY MOUNTED AND THE SURFACE OF THE TRIM IS EITHER FLUSH WITH THE WALL SURFACE OR WITHIN 1/8" OF THE WALL SURFACE. JUNCTION BOXES LARGER THAN 4" SQUARE SHALL BE MOUNTED IN A MANNER THAT IS SIMILAR TO THE SYSTEM NOTED ABOVE OR ACHIEVES THE SAME RESULTS.
2. PLASTER RINGS DEPTH SHALL BE 1/8" SHALLOWER THAN THE GYP BOARD APPLIED TO THE WALL.
3. MOUNTING BRACKET SHALL BE BY CADDY OR EQUAL.
4. ALL BACK BOXES SHALL BE A MINIMUM OF 2-1/8" DEEP.

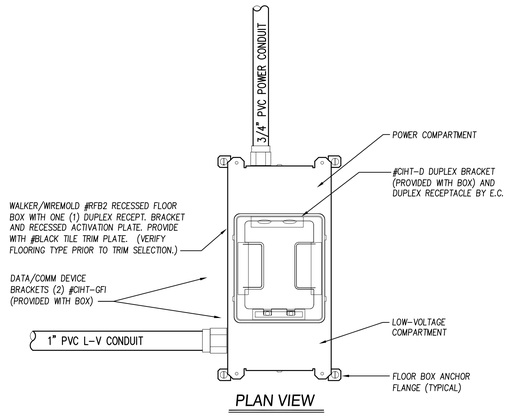

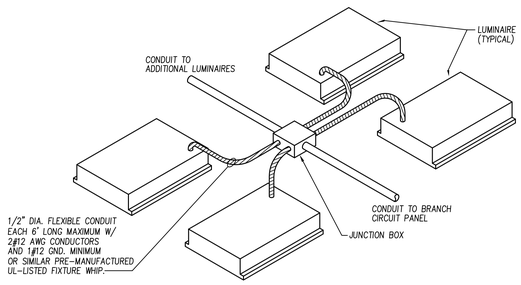

5 TYPICAL RECESSED LIGHT FIXTURE WIRING DETAIL

SCALE: NONE

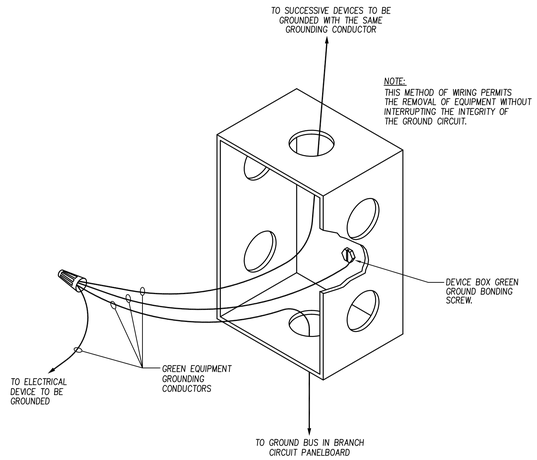

6 NON-INTERRUPTABLE EQUIPMENT GROUNDING CONDUCTOR

SCALE: NONE

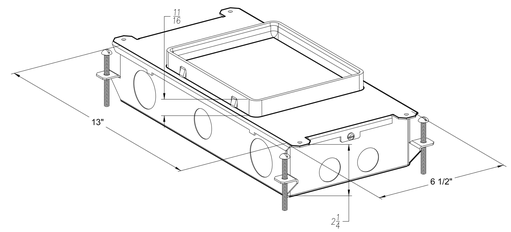

DIMENSIONS

7 FLUSH FLOOR BOX DETAIL

NONE

NOTE:

1. FOLLOW MANUFACTURER'S INSTALLATION INSTRUCTIONS.
2. VERIFY THAT BOX IS POSITIONED SQUARE WITH BUILDING AND LEVEL PRIOR TO CONCRETE POUR.
3. VERIFY THAT ALL NECESSARY BOX COMPARTMENT DIVIDERS ARE INSTALLED PRIOR TO CONCRETE POUR.

apace Design
apacedesign
2113 Lake Ave. Historical Dist.
Peoria, Illinois 61614-4704
309.676.1000
www.apacedesign.com
architecture interiors designs

KED
KEITH ENGINEERING DESIGN, INC.
208 S. FIRST ST.
MINONK, IL 61760
FAX 309-274-5003

ELECTRICAL DETAILS

Peoria PlayHouse Children's Museum
Peoria Park District
Glen Oak Park Pavillion
Peoria, IL 61603

LICENSED PROFESSIONAL ENGINEER BRIAN R. KEITH 062-050306 EXPIRES 10/04/2015 STATE OF ILLINOIS

DATE: 03/19/2014

NO.	ISSUE	DATE
1	Bidding Documents	3.19.14

DATE 3.19.2014	PROJECT NO. 24905.02
DRAWN BY TDC	SHEET
CHECKED TDC	E400
APPROVED BRK	18 OF 20

CODE

LUMINAIRE SCHEDULE

CALLOUT	SYMBOL	DESCRIPTION	MODEL	NOTE
EM1		EMERGENCY LIGHTING UNIT, WALL MOUNT, MINIMUM 90-MINUTES ILLUMINATION UPON LOSS OF POWER, COMPACT LOW-PROFILE THERMOPLASTIC HOUSING, 120/277-VOLT INPUT, TWO 5.4-WATT KRYPTON LAMPS, MAINTENANCE-FREE LEAD-CALCUIM BATTERY.	LITHONIA #ELM2 PHILIPS-CHLORIDE #VU6 SURE-LITES #CC3 DUAL-LITE #EZ-2	
F1		SPECIFICATION GRADE TROFFER, NOMINAL SIZE 2' X 4', SUITABLE FOR USE IN GRID CEILING, STEEL HOUSING, WHITE FINISH, WITH T-BAR SAFETY CLIPS, TWO EACH 32-WATT T8 LAMPS, FLUSH STEEL WHITE FRAME, 0.125" THICK #12 PATTERN ACRYLIC DIFFUSER, ONE 10% THD PROGRAMMED RAPID START ELECTRONIC MULTI-VOLT BALLAST.	LITHONIA 2SP8 G 2 32 A12125 MVOLT GEB10PS DAY-BRITE 2SPG232 FS12 120 1/2 EB METALUX 2GC8 232 A125 120 EB81 COLUMBIA ST824 232G FSA12125 EB8120	
F1A		SAME AS TYPE 'A' EXCEPT WITH PLASTER FRAME		
F2		RECESSED DIRECT/INDIRECT, SUITABLE FOR USE IN GRID CEILING, 2' X 4' NOMINAL DIMENSIONS, 2' WIDE SYMMETRIC DISTRIBUTION, GRID TRIM, TWO EACH 32-WATT T8 LAMPS, STRAIGHT BLADE LOUVER WITH ROUND HOLES, ONE EACH ADVANCE 0.95 BALLAST FACTOR 120 VOLT 10% THD ELECTRONIC DIMMING BALLAST.	LITHONIA 2AV G 2 32 SBL 120 DIM METALUX 2AC2 232 BP 120 DIM DAY-BRITE 2AVM G232 LMWP 120 EBD COLUMBIA STE24 232 G MPO EPU	
F3		6" LED RECESSED CAN LIGHT WITH MINIMUM 1800 LUMENS, SEMI-SPECULAR REFLECTOR, CLEAR APERTURE, WHITE CEILING FLANGE, MEDIUM DISTRIBUTION, MULTI-VOLT DRIVER INPUT.	LITHONIA L7XLEDT24 HALO H750T-ML7098-40-494SC06 JUNO TC922LEDG3-41K-U	
F4		SURFACE MOUNTED WRAP AROUND, LOW-PROFILE, STEEL HOUSING, WHITE FINISH, 10" W X 3" D X 48" L NOMINAL DIMENSIONS, WITH LIFT AND SHIFT PRISMATIC ACRYLIC LENS, END PLATES, TWO 32-WATT T8 LAMPS, MULTIVOLT 10% THD PROGRAMMED RAPID START ELECTRONIC BALLAST.	LITHONIA LB 2 32 MVOLT GEB10PS DAY-BRITE METALUX COLUMBIA	
F5		GENERAL PURPOSE STRIP LIGHT, STEEL HOUSING, WHITE FINISH, 14" W X 7" D X 50" L NOMINAL DIMENSIONS, TWO 32-WATT T8 LAMPS, MULTIVOLT 10% THD RAPID START ELECTRONIC BALLAST.	LITHONIA C2 32 MVOLT GEB10RS DAY-BRITE COOPER HUBBELL	
F6		ELEVATOR PIT LIGHT, INCANDESCENT VAPORTIGHT, WALL MOUNTED, ENCLOSED & GASKETED, ONE EACH 100-WATT A19 LAMP, 120-VOLT. NON-ADDRESSABLE	CROUSE HINDS V-SERIES OR APPROVED EQUAL	
F7E		SURFACE COMMERCIAL FLUORESCENT WALL BRACKET; WHITE COLOR, STEEL HOUSING, WHITE FINISH, 24" L X 8" W X 3-1/2" D NOMINAL DIMENSIONS, #12 PATTERN INVERTED 0.125" THICK UPLIGHT LENS, MULTI-VOLT INPUT, WITH 1,400 LUMEN EMERGENCY BATTERY PACK .	LITHONIA WT8 217 MVOLT GEB10PS EL14	
F9		TRAPEZOIDAL EXTERIOR WALL FIXTURE, 16" L X 8" H X 10" D NOMINAL DIMENSIONS, 42-WATT COMPACT FLUORESCENT LAMP, 120-VOLT ELECTRONIC BALLAST, CLEAR TEMPERED GLASS LENS, AND BRONZE FINISH. COLOR VERIFIED BY ARCHITECT (STANDARD COLOR SELECTIONS BRONZE, BLACK, WHITE) PRIOR TO ORDER.	LITHONIA WST 42TRT WT MVOLT DC2012 McGRAW-EDISON IST 42CF E1 2S BZ EM/SC/12V HUBBELL GARDCO	
F9E		TRAPEZOIDAL EXTERIOR WALL FIXTURE, 16" L X 8" H X 10" D NOMINAL DIMENSIONS, 42-WATT COMPACT FLUORESCENT LAMP, AND LOW-VOLTAGE (12VDC) EMERGENCY OPERATION LAMP, 120-VOLT ELECTRONIC BALLAST, CLEAR TEMPERED GLASS LENS, AND BRONZE FINISH. MAKE CONNECTION TO INDOOR BATTERY BACKUP UNIT. ADJACENT BATTERY EMERGENCY/EXIT FIXTURE MAY BE UPSIZED TO 12V VERSION TO PROVIDE REMOTE EMERGENCY POWER. COLOR VERIFIED BY ARCHITECT (STANDARD COLOR SELECTIONS BRONZE, BLACK, WHITE) PRIOR TO ORDER. MOUNT EMERGENCY BATTERY BACKUP IN CEILING SPACE OF ADJACENT INTERIOR SPACE. MOUNT TEST SWITCH AT 7'-0" AFF OR IN CEILING TILE BELOW BATTERY UNIT, ON CEILINGS 8'-6" OR LOWER. BATTERY BACKUP OPTION AND SUPPLY SOURCE SHALL BE COORDINATED/VERIFIED THROUGH MANUFACTURER'S REPRESENTATIVE.	LITHONIA WST 42TRT WT MVOLT DC2012 McGRAW-EDISON IST 42CF E1 2S BZ EM/SC/12V HUBBELL GARDCO	
F10		24" LED STRIP FIXTURE MOUNTED UNDER DESK COUNTER OVERHANG. PROVIDE CONNECTING LINKS FOR MULTIPLE SECTIONS. PROVIDE POWER SUPPLIES	DANALITE L2-24-4F-S-RE/LE LUMINII	
F11		3" ROUND SURFACE MOUNTED LED CYLINDER WITH CAST OR MACHINED ALUMINUM HOUSING, 4000-4100 DEG. K COLOR TEMPERATURE LED's, INTEGRAL ELECTRONIC DRIVER, BRONZE FINISH, AND MEDIUM FLOOD DISTRIBUTION.	B-K SM-AR-LED-e23-MFL-A9 -BZP-12-E LUMIERE' APPROVED EQUIVALENT	
F12		SURFACE MOUNTED WRAP AROUND, LOW-PROFILE, STEEL HOUSING, WHITE FINISH, 10" W X 3" D X 48" L NOMINAL DIMENSIONS, WITH LIFT AND SHIFT PRISMATIC ACRYLIC LENS, END PLATES, TWO 32-WATT T8 LAMPS, MULTIVOLT 10% THD PROGRAMMED RAPID START ELECTRONIC BALLAST.	LITHONIA LB 2 32 MVOLT GEB10PS DAY-BRITE METALUX COLUMBIA	
F13		SURFACE MOUNTED, 9.5" DIAMETER, 5" DEEP EXTERIOR FIXTURE WITH CAST METAL TRIM AND GRILLE, FROSTED GLASS LENS/DIFFUSER, 120 VOLT, WET LOCATION LISTED, WHITE HOUSING FINISH. PROVIDE 20 WATT LED LAMP WITH INTEGRAL DRIVER AND MEDIUM SCREW BASE. FIXTURE IS SAME AS TYPE 'SD' EXCEPT WITH 20 WATT LED RETROFIT LAMP, BLACK FINISH, AND PRICING SHALL NOT BE SEPARATED OUT AS PART OF EXHIBIT LIGHTING PACKAGE.	ACCESS 20296 BK FST	
GA		SURFACE MOUNTED ADJUSTABLE LED FLOOD LIGHT. REFERENCE INCLUDED EXHIBIT LIGHTING PLANS, SCHEDULES, AND NOTES BY EXHIBIT LIGHTING DESIGNER. PROVIDE SEPARATE PRICING FOR EXHIBIT LIGHT FIXTURE GROUP. SEE BID FORM FOR LINE ITEM.	SEE EXHIBIT LIGHTING SCHEDULE.	
GA-1		SURFACE MOUNTED ADJUSTABLE LED FLOOD LIGHT. REFERENCE INCLUDED EXHIBIT LIGHTING PLANS, SCHEDULES, AND NOTES BY EXHIBIT LIGHTING DESIGNER. PROVIDE SEPARATE PRICING FOR EXHIBIT LIGHT FIXTURE GROUP. SEE BID FORM FOR LINE ITEM.	SEE EXHIBIT LIGHTING SCHEDULE.	
LA		SURFACE MOUNTED LINEAR LED WALL WASH. FINISH TO BE CLEAR ANODIZED. REFERENCE INCLUDED EXHIBIT LIGHTING PLANS, SCHEDULES, AND NOTES BY EXHIBIT LIGHTING DESIGNER. PROVIDE SEPARATE PRICING FOR EXHIBIT LIGHT FIXTURE GROUP. SEE BID FORM FOR LINE ITEM.	SEE EXHIBIT LIGHTING SCHEDULE.	
LB		LED TAPE LIGHT POWER SUPPLY TO BE REMOTED, CONCEALED FROM VIEW AND PROPERLY VENTILATED PER MANUFACTURER RECOMMENDATIONS. REFERENCE INCLUDED EXHIBIT LIGHTING PLANS, SCHEDULES, AND NOTES BY EXHIBIT LIGHTING DESIGNER. PROVIDE SEPARATE PRICING FOR EXHIBIT LIGHT FIXTURE GROUP. SEE BID FORM FOR LINE ITEM.	SEE EXHIBIT LIGHTING SCHEDULE.	
PA		COMPACT FLUORESCENT, PENDANT MOUNTED LUMINAIRE REFERENCE INCLUDED EXHIBIT LIGHTING PLANS, SCHEDULES, AND NOTES BY EXHIBIT LIGHTING DESIGNER. PROVIDE SEPARATE PRICING FOR EXHIBIT LIGHT FIXTURE GROUP. SEE BID FORM FOR LINE ITEM.	SEE EXHIBIT LIGHTING SCHEDULE.	
PB		ONION HANGING LANTERN W/ COPPER FINISH, CLEAR GLASS OPTIC, AND 2' CHAIN REFERENCE INCLUDED EXHIBIT LIGHTING PLANS, SCHEDULES, AND NOTES BY EXHIBIT LIGHTING DESIGNER. PROVIDE SEPARATE PRICING FOR EXHIBIT LIGHT FIXTURE GROUP. SEE BID FORM FOR LINE ITEM.	SEE EXHIBIT LIGHTING SCHEDULE.	2
PC		PENDANT MOUNTED CHICKEN WIRE BASKET AREA LIGHT WITH RETRO FIT LED LAMP. REFERENCE INCLUDED EXHIBIT LIGHTING PLANS, SCHEDULES, AND NOTES BY EXHIBIT LIGHTING DESIGNER. PROVIDE SEPARATE PRICING FOR EXHIBIT LIGHT FIXTURE GROUP. SEE BID FORM FOR LINE ITEM.	SEE EXHIBIT LIGHTING SCHEDULE.	4
PD		SHADED STRING LIGHTS WITH FROSTED RETROFIT LED LAMP REFERENCE INCLUDED EXHIBIT LIGHTING PLANS, SCHEDULES, AND NOTES BY EXHIBIT LIGHTING DESIGNER. PROVIDE SEPARATE PRICING FOR EXHIBIT LIGHT FIXTURE GROUP. SEE BID FORM FOR LINE ITEM.	SEE EXHIBIT LIGHTING SCHEDULE.	
PF		PENDANT MOUNTED FIXTURE WITH 9"H x 16" DIAMETER WHITE MYLAR EXTERIOR SHADE AND WHITE LINEN INTERIOR SHADE, MEDIUM SCREW BASE LAMP SOCKET, SUSPENDED WITH COMBINATION STEM AND CHAIN. COORDINATE SUSPENSION LENGTH WITH EXHIBIT INSTALLER. VERIFY FINISH OF METAL PARTS PRIOR TO ORDERING. FIXTURE SHALL HAVE FACTORY LABELING FOR MAXIMUM 30 WATT LAMP. REFERENCE INCLUDED EXHIBIT LIGHTING PLANS, SCHEDULES, AND NOTES BY EXHIBIT LIGHTING DESIGNER. PROVIDE SEPARATE PRICING FOR EXHIBIT LIGHT FIXTURE GROUP. SEE BID FORM FOR LINE ITEM.	SEE EXHIBIT LIGHTING SCHEDULE.	4
PG		PENDANT MOUNTED AREA LIGHT GLOBE WITH RETROFIT LED LAMP REFERENCE INCLUDED EXHIBIT LIGHTING PLANS, SCHEDULES, AND NOTES BY EXHIBIT LIGHTING DESIGNER. PROVIDE SEPARATE PRICING FOR EXHIBIT LIGHT FIXTURE GROUP. SEE BID FORM FOR LINE ITEM.	SEE EXHIBIT LIGHTING SCHEDULE.	4
PH		PENDANT MOUNTED, COMPACT FLUORESCENT AREA LIGHT LUMINOUS CYLINDER REFERENCE INCLUDED EXHIBIT LIGHTING PLANS, SCHEDULES, AND NOTES BY EXHIBIT LIGHTING DESIGNER. PROVIDE SEPARATE PRICING FOR EXHIBIT LIGHT FIXTURE GROUP. SEE BID FORM FOR LINE ITEM.	SEE EXHIBIT LIGHTING SCHEDULE.	
PJ		PIPE LINE PENDANT MOUNTED AREA LIGHT. FINISH TO BE WHITE. REFERENCE INCLUDED EXHIBIT LIGHTING PLANS, SCHEDULES, AND NOTES BY EXHIBIT LIGHTING DESIGNER. PROVIDE SEPARATE PRICING FOR EXHIBIT LIGHT FIXTURE GROUP. SEE BID FORM FOR LINE ITEM.	SEE EXHIBIT LIGHTING SCHEDULE.	
PK		PENDANT MOUNTED DECO AREA LIGHT WITH RETROFIT LED LAMP REFERENCE INCLUDED EXHIBIT LIGHTING PLANS, SCHEDULES, AND NOTES BY EXHIBIT LIGHTING DESIGNER. PROVIDE SEPARATE PRICING FOR EXHIBIT LIGHT FIXTURE GROUP. SEE BID FORM FOR LINE ITEM.	SEE EXHIBIT LIGHTING SCHEDULE.	4
PL		PENDANT MOUNTED DIRECT LED CYLINDRICAL AREA LIGHT LUMINAIRE REFERENCE INCLUDED EXHIBIT LIGHTING PLANS, SCHEDULES, AND NOTES BY EXHIBIT LIGHTING DESIGNER. PROVIDE SEPARATE PRICING FOR EXHIBIT LIGHT FIXTURE GROUP. SEE BID FORM FOR LINE ITEM.	SEE EXHIBIT LIGHTING SCHEDULE.	
PM		PENDANT MOUNTED, COMPACT FLUORESCENT AREA LIGHT LUMINAIRE WITH WHITE OPAL REFERENCE INCLUDED EXHIBIT LIGHTING PLANS, SCHEDULES, AND NOTES BY EXHIBIT LIGHTING DESIGNER. PROVIDE SEPARATE PRICING FOR EXHIBIT LIGHT FIXTURE GROUP. SEE BID FORM FOR LINE ITEM.	SEE EXHIBIT LIGHTING SCHEDULE.	
PP		SUSPENDED LANTERN 16"H x 9" DIA., BURNISHED COPPER FINISH, MEDIUM SCREW BASE LAMP SOCKET WITH LED SCREW-IN LAMP. FIXTURE HAS 36" CHAIN AND 72" CORD FOR ADJUSTABLE SUSPENSION LENGTH. COORDINATE SUSPENSION WITH EXHIBIT INSTALLER. LAMP: 5 WATT, 25,000 HR, DIMMABLE, 2700 DEG. K, 82 CRI, MINIMUM 60 LUMENS/W, FROSTED BLUNT TIP FIXTURE SHALL BE FACTORY LABELED FOR 10 WATTS MAXIMUM LAMPING REFERENCE INCLUDED EXHIBIT LIGHTING PLANS, SCHEDULES, AND NOTES BY EXHIBIT LIGHTING DESIGNER. PROVIDE SEPARATE PRICING FOR EXHIBIT LIGHT FIXTURE GROUP. SEE BID FORM FOR LINE ITEM.	SEE EXHIBIT LIGHTING SCHEDULE.	2
PQ		SUSPENDED DECORATIVE 8.5"H x 12" DIA., PENDANT WITH PRISMATIC ACRYLIC REFRACTOR, CLEAR FLAT ACRYLIC LENS, EXTRUDED ALUMINUM BALLAST HOUSING, ADJUSTABLE AIRCRAFT CABLE AND POWER CORD SUSPENSION, AND 42-WATT, TRIPLE TUBE COMPACT FLUORESCENT LAMP WITH GX24q-4 BASE. COORDINATE SUSPENSION WITH EXHIBIT INSTALLER. LAMP: 42 WATT, 12,000 HR, 3500 DEG. K, 82 CRI, MINIMUM 3200 INITIAL LUMENS REFERENCE INCLUDED EXHIBIT LIGHTING PLANS, SCHEDULES, AND NOTES BY EXHIBIT LIGHTING DESIGNER. PROVIDE SEPARATE PRICING FOR EXHIBIT LIGHT FIXTURE GROUP. SEE BID FORM FOR LINE ITEM.	SEE EXHIBIT LIGHTING SCHEDULE.	
RA		ROUND, ADJUSTABLE, RECESSED LED DOWNLIGHT REFERENCE INCLUDED EXHIBIT LIGHTING PLANS, SCHEDULES, AND NOTES BY EXHIBIT LIGHTING DESIGNER. PROVIDE SEPARATE PRICING FOR EXHIBIT LIGHT FIXTURE GROUP. SEE BID FORM FOR LINE ITEM.	SEE EXHIBIT LIGHTING SCHEDULE.	
RB		ROUND, FIXED, RECESSED LED DOWNLIGHT REFERENCE INCLUDED EXHIBIT LIGHTING PLANS, SCHEDULES, AND NOTES BY EXHIBIT LIGHTING DESIGNER. PROVIDE SEPARATE PRICING FOR EXHIBIT LIGHT FIXTURE GROUP. SEE BID FORM FOR LINE ITEM.	SEE EXHIBIT LIGHTING SCHEDULE.	
SA		SURFACE MOUNTED SCHOOL HOUSE AREA LIGHT LUMINAIRE WITH RETROFIT LED LAMP REFERENCE INCLUDED EXHIBIT LIGHTING PLANS, SCHEDULES, AND NOTES BY EXHIBIT LIGHTING DESIGNER. PROVIDE SEPARATE PRICING FOR EXHIBIT LIGHT FIXTURE GROUP. SEE BID FORM FOR LINE ITEM.	SEE EXHIBIT LIGHTING SCHEDULE.	4
SB		LUMINOUS LED LIT SLIM SIGN PANEL REFERENCE INCLUDED EXHIBIT LIGHTING PLANS, SCHEDULES, AND NOTES BY EXHIBIT LIGHTING DESIGNER. PROVIDE SEPARATE PRICING FOR EXHIBIT LIGHT FIXTURE GROUP. SEE BID FORM FOR LINE ITEM.	SEE EXHIBIT LIGHTING SCHEDULE.	
SC		SURFACE MOUNTED 4 LIGHT DIRECTIONAL LIGHT BAR WITH RETROFIT LED LAMPS REFERENCE INCLUDED EXHIBIT LIGHTING PLANS, SCHEDULES, AND NOTES BY EXHIBIT LIGHTING DESIGNER. PROVIDE SEPARATE PRICING FOR EXHIBIT LIGHT FIXTURE GROUP. SEE BID FORM FOR LINE ITEM.	SEE EXHIBIT LIGHTING SCHEDULE.	3
SD		SURFACE MOUNTED, 9.5" DIAMETER, 5" DEEP EXTERIOR FIXTURE WITH CAST METAL TRIM AND GRILLE, FROSTED GLASS LENS/DIFFUSER, 120 VOLT, WET LOCATION LISTED, WHITE HOUSING FINISH. REFERENCE INCLUDED EXHIBIT LIGHTING PLANS, SCHEDULES, AND NOTES BY EXHIBIT LIGHTING DESIGNER. PROVIDE SEPARATE PRICING FOR EXHIBIT LIGHT FIXTURE GROUP. SEE BID FORM FOR LINE ITEM.	SEE EXHIBIT LIGHTING SCHEDULE.	2
T		SINGLE CIRCUIT ELECTRIFIED TRACK REFERENCE INCLUDED EXHIBIT LIGHTING PLANS, SCHEDULES, AND NOTES BY EXHIBIT LIGHTING DESIGNER. PROVIDE SEPARATE PRICING FOR EXHIBIT LIGHT FIXTURE GROUP. SEE BID FORM FOR LINE ITEM.	SEE EXHIBIT LIGHTING SCHEDULE.	
TA		TRACK MOUNTED LED ACCENT LIGHT REFERENCE INCLUDED EXHIBIT LIGHTING PLANS, SCHEDULES, AND NOTES BY EXHIBIT LIGHTING DESIGNER. PROVIDE SEPARATE PRICING FOR EXHIBIT LIGHT FIXTURE GROUP. SEE BID FORM FOR LINE ITEM.	SEE EXHIBIT LIGHTING SCHEDULE.	
TB		TRACK MOUNTED LED TRACK HEAD REFERENCE INCLUDED EXHIBIT LIGHTING PLANS, SCHEDULES, AND NOTES BY EXHIBIT LIGHTING DESIGNER. PROVIDE SEPARATE PRICING FOR EXHIBIT LIGHT FIXTURE GROUP. SEE BID FORM FOR LINE ITEM.	SEE EXHIBIT LIGHTING SCHEDULE.	
TC		TRACK MOUNTED LED PATTERN PROJECTOR REFERENCE INCLUDED EXHIBIT LIGHTING PLANS, SCHEDULES, AND NOTES BY EXHIBIT LIGHTING DESIGNER. PROVIDE SEPARATE PRICING FOR EXHIBIT LIGHT FIXTURE GROUP. SEE BID FORM FOR LINE ITEM.	SEE EXHIBIT LIGHTING SCHEDULE.	
TLV		MONORAIL TRACK FOR TYPE TB REFERENCE INCLUDED EXHIBIT LIGHTING PLANS, SCHEDULES, AND NOTES BY EXHIBIT LIGHTING DESIGNER. PROVIDE SEPARATE PRICING FOR EXHIBIT LIGHT FIXTURE GROUP. SEE BID FORM FOR LINE ITEM.	SEE EXHIBIT LIGHTING SCHEDULE.	
WA		MASON JAR SCONCE WITH RETROFIT LED LAMP REFERENCE INCLUDED EXHIBIT LIGHTING PLANS, SCHEDULES, AND NOTES BY EXHIBIT LIGHTING DESIGNER. PROVIDE SEPARATE PRICING FOR EXHIBIT LIGHT FIXTURE GROUP. SEE BID FORM FOR LINE ITEM.	SEE EXHIBIT LIGHTING SCHEDULE.	1
WB		SURFACE MOUNTED LED SCONCE WITH LED CUBE ACCENT FROM BRONZE FINISHED FRAME REFERENCE INCLUDED EXHIBIT LIGHTING PLANS, SCHEDULES, AND NOTES BY EXHIBIT LIGHTING DESIGNER. PROVIDE SEPARATE PRICING FOR EXHIBIT LIGHT FIXTURE GROUP. SEE BID FORM FOR LINE ITEM.	SEE EXHIBIT LIGHTING SCHEDULE.	
WC		3" ROUND, 1/3" THICK LED PANEL LIGHT MOUNTED ON VERTICAL SURFACE OF CLIMBING AREA, 4.5 INPUT WATTS, 12 VDC, 60,000 HR, 3600 DEG. K. REFERENCE CLIMBING EXHIBIT CONSTRUCTION DETAILS ON EXHIBIT LIGHTING SHEET LL-103. COORDINATE WITH EXHIBIT DESIGNER AND FABRICATOR. SYMBOL INDICATES MULTIPLE FIXTURES IN A COMMON VERTICAL PLANE, NOT JUST A SINGLE FIXTURE. PROVIDE MINIMUM 50 WATT, 120 VAC TO 12 VDC, POWER SUPPLY REFERENCE INCLUDED EXHIBIT LIGHTING PLANS, SCHEDULES, AND NOTES BY EXHIBIT LIGHTING DESIGNER. PROVIDE SEPARATE PRICING FOR EXHIBIT LIGHT FIXTURE GROUP. SEE BID FORM FOR LINE ITEM.	SEE EXHIBIT LIGHTING SCHEDULE.	1
XE		COMBINATION EMERGENCY/EXIT FIXTURE, LED, TOP, BACK OR END MOUNTING, STENCIL FACE, WHITE THERMOPLASTIC HOUSING, TWO 6-WATT LAMPS SINGLE FACE WITH EXTRA FACE PLATE AND COLOR PANEL FOR FIELD CONVERSION TO DOUBLE FACE, RED PANEL, 120/277 DUAL VOLTAGE, WITH HIGH-OUTPUT LEAD-CADMIUM BACK-UP BATTERY, FOR REMOTE HEAD CAPACITY.	LITHONIA LHQM S W 3 R 120/277 HO MCPHILBEN COOPER HUBBELL	

NOTES:

1. FIXTURE SHALL BE FACTORY LABELED FOR MAXIMUM 10 WATT LAMP.
2. FIXTURE SHALL BE FACTORY LABELED FOR MAXIMUM 20 WATT LAMP.
3. FIXTURE SHALL BE FACTORY LABELED FOR MAXIMUM 50 WATT LAMP.
4. FIXTURE SHALL BE FACTORY LABELED FOR MAXIMUM 60 WATT LAMP.

LUMINAIRE SCHEDULE NOTES:

1. CONTRACTOR SHALL REFER TO ARCHITECTURAL REFLECTED CEILING PLANS, MECHANICAL SYSTEM PLANS, DETAILS, SECTIONS, AND ELEVATIONS FOR AID IN COORDINATION OF FIXTURE LOCATIONS AND ANY INTERFERENCES.
2. CONTRACTOR SHALL PROVIDE COPIES OF COMPLETE FIXTURE SCHEDULES, LIGHTING PLANS, AND LIGHTING SPECIFICATIONS TO ALL SUPPLIERS OR MANUFACTURERS' REPRESENTATIVES INVOLVED IN FIXTURE PRICING OR ORDERING, PRIOR TO BID.
3. FIXTURES SHALL BE PROVIDED WITH FEATURES, OPTIONS, AND ACCESSORIES REQUIRED FOR COMPLETE INSTALLATION AND THOSE LISTED IN FIXTURE MODEL NUMBERS PROVIDED, SPECS., %%UAND%%U WRITTEN DESCRIPTION. IF CONFLICTS EXIST BETWEEN THESE, NOTIFY A/E FOR CLARIFICATION PRIOR TO BIDDING OR ORDERING.
4. ALL FIXTURES RECESSED IN, OR SUSPENDED FROM SUSPENDED ACOUSTICAL TILE (S.A.T.) CEILINGS SHALL HAVE INDEPENDENT SUPPORT FROM BUILDING FRAMING OR OTHER APPROVED STRUCTURE.
5. CONTRACTOR SHALL VERIFY LAMP TYPES INDICATED ARE COMPATIBLE WITH MANUFACTURERS' CURRENT MODEL FIXTURES SUBMITTED. NOTIFY A/E IMMEDIATELY OF DISCREPANCIES AND MAKE NECESSARY CORRECTIONS PRIOR TO BIDDING.
6. PROVIDE #10 AWG CONDUCTORS FOR ALL EXTERIOR BUILDING LIGHTING CIRCUITS.
7. PROVIDE #8 AWG CONDUCTORS FOR ALL EXTERIOR SITE LIGHTING CIRCUITS.
8. ALL LAMP AND BALLAST COMBINATIONS SHALL BE CEE CERTIFIED.
9. LAY-IN LIGHTING FIXTURES: USE GRID AS A SUPPORT ELEMENT.
10. INSTALL CEILING SUPPORT SYSTEM RODS OR WIRES INDEPENDENT OF THE CEILING SUSPENSION DEVICES FOR EACH FIXTURE FOR SUPPLEMENTAL SUPPORT. LOCATE NOT MORE THAN 6 INCHES FROM THE LIGHTING FIXTURE CORNERS.
11. SUPPORT CLIPS: FASTEN TO LIGHTING FIXTURES AND TO CEILING GRID MEMBERS AT OR NEAR EACH FIXTURE CORNER WITH CLIPS THAT ARE UL LISTED FOR THE APPLICATION.
12. FIXTURES OF SIZES LESS THAN THE CEILING GRID: INSTALL AS INDICATED ON THE REFLECTED CEILING PLANS OR CENTER IN ACOUSTICAL PANEL. SUPPORT FIXTURES INDEPENDENTLY WITH AT LEAST TWO 3/4-INCH METAL CHANNELS SPANNING AND SECURED TO THE CEILING TEES.
13. ALL INTERIOR LAMP COLORS SHALL BE 35K AND ALL EXTERIOR LAMP COLORS SHALL BE 41K UNLESS SPECIFICALLY NOTED OTHERWISE.

NOTE:
REFERENCE EXHIBIT LIGHTING DESIGNER'S DRAWINGS, SPECIFICATIONS, NOTES, AND SCHEDULES, ATTACHED TO THIS SET OF DOCUMENTS.

apaceDesign
architects engineers designers
apaceDesign
2112 East War Memorial Drive
Peoria Illinois 61614
t:309.685.4722 f:309.685.4784
www.apaceDesign.com

KED
KEITH ENGINEERING DESIGN, INC.
208 S. FIRST ST.
MORTON, IL 61550
PH. 309-938-4005
FAX 309-214-0063

LIGHTING FIXTURE SCHEDULE AND NOTES

Peoria PlayHouse Children's Museum
Peoria Park District
Glen Oak Park Pavillion
Peoria, IL 61603

LICENSED PROFESSIONAL ENGINEER
BRIAN R. KEITH
062-050306
EXPIRES: 30NOV15
STATE OF ILLINOIS
DATE: 03/19/2014

NO.	ISSUE	DATE
1	Bidding Documents	3.19.14

DATE 3.19.2014	PROJECT NO. 24905.02
DRAWN BY DRJ/TDC	SHEET
CHECKED TDC	E500
APPROVED BRK	19 OF 20

CODE

MATERIAL SCHEDULE

ITEM	SYMBOL	DESCRIPTION	MANUFACTURER
1	COVER PLATES	ALL COVER PLATES FOR DEVICES SHALL BE THERMOPLASTIC CONSTRUCTION IN FINISHED AREAS. COVER PLATES IN UNFINISHED SPACES SHALL BE GALVANIZED STEEL CONSTRUCTION. ALL DEVICES AND COVER PLATE COLORS SHALL BE SELECTED BY THE ARCHITECT.. ALL DEVICE PLATES SHALL INCLUDE A PRE-PRINTED LABEL INDICATING THE PANEL AND CIRCUIT NUMBER SERVING THE DEVICE. THE LABEL SHALL HAVE A CLEAR BACK GROUND WITH BLACK LETTERING. FURNISH AND INSTALL PRE-PRINTED LABELS ON ALL MULTI-GANG SWITCH PLATES OR SWITCHES CONTROLLING LOADS FROM REMOTE AREAS. THE LABELS SHALL INDICATE THE LOAD CONTROLLED. LABELS SHALL BE A CLEAR BACKGROUND WITH BLACK LETTERING. REVIEW LABELING WITH THE OWNER'S REPRESENTATIVE PRIOR TO INSTALLATION.	HUBBELL LEVITON PASS & SEYMOUR COOPER LUTRON
2	$\$$	SINGLE POLE SWITCH, TOGGLE HANDLE, MAINTAINED CONTACT, 20 AMP, 120/277 VOLT. SIDE AND BACK WIRED.	HUBBELL 1221 LEVITON, PASS & SEYMOUR, COOPER
3	$\$_3$	SWITCH, THREE WAY, TOGGLE HANDLE, MAINTAINED CONTACT, 20 AMP, 120/277 VOLT. SIDE AND BACK WIRED.	HUBBELL 1223 LEVITON, PASS & SEYMOUR, COOPER
4	$\$_P$	SWITCH, PILOT LIGHT, TOGGLE HANDLE, MAINTAINED CONTACT, 20 AMP, 120/277 VOLT. SIDE AND BACK WIRED. HANDLE SHALL BE LIT WHEN LOAD IS OFF.	HUBBELL 1203ILC LEVITON, PASS & SEYMOUR, COOPER
5	$\$_D$	SWITCH, DIMMER, TOGGLE HANDLE, SLIDE ADJUST, MAINTAINED CONTACT, 20 AMP, 120/277 VOLT. SIDE AND BACK WIRED. DIMMING METHOD SHALL BE COMPATIBLE WITH TYPE 'F10' LED FIXTURE.	LUTRON, HUBBELL, LEVITON, PASS & SEYMOUR, COOPER
6	$\$_{MS1}$	AUTOMATIC WALL SWITCH/OCCUPANCY SENSOR, 180 DEGREE COVERAGE OF 20 FT., INFRARED TECHNOLOGY, 120/277 VOLT, DIGITAL TIME DELAY ADJUSTMENT FROM 30 SECONDS TO 30 MINUTES, ADJUSTABLE SENSITIVITY FROM 20% TO 100%, ADJUSTABLE LIGHT LEVEL SETTING OF 2 TO 200 FOOT-CANDLES, COMPATIBLE WITH ALL ELECTRONIC BALLASTS, WITH LED INDICATOR TO INDICATE OCCUPANCY. FIVE YEAR WARRANTY. PROGRAM TIMER TO SHUT OFF LIGHTING AFTER 15 MINUTES OF NO ACTIVITY IN THE SPACE. TRAIN OWNER'S REPRESENTATIVE ON ADJUSTMENT FOR THE SENSOR FOR FUTURE ADJUSTMENTS.	SENSORSWITCH WSD-P WATTSTOPPER LEVITON HUBBELL
7	$\$_{MS2}$	AUTOMATIC WALL SWITCH/OCCUPANCY SENSOR, 180 DEGREE COVERAGE UP TO 20 FT., PIR & ULTRASONIC OR MICROPHONIC TECHNOLOGIES, FOR CONTROLLING LIGHTING LOADS, 120/277 VOLT, TIME DELAY ADJUSTMENT FROM 30 SECONDS TO 30 MINUTES, COMPATIBLE WITH ALL ELECTRONIC BALLASTS, WITH LED INDICATOR TO INDICATE OCCUPANCY. PROGRAM TIMER TO SHUT OFF LIGHTING AFTER 15 MINUTES OF NO ACTIVITY IN THE SPACE. TRAIN OWNER'S REPRESENTATIVE ON ADJUSTMENT FOR THE SENSOR FOR FUTURE ADJUSTMENTS.	SENSORSWITCH WSD-PDT-P WATTSTOPPER LEVITON HUBBELL
8	OS1	DUAL-TECHNOLOGY (PASSIVE INFRARED AND ULTRASONIC OR MICROPHONIC) CEILING SENSOR, 360 DEGREE COVERAGE OF 450-SF, RANGE, 24V LOW VOLTAGE, DIGITAL TIME DELAY ADJUSTMENT FROM 30-SECONDS TO 30-MINUTES, ADJUSTABLE SENSITIVITY, COMPATIBLE WITH ALL ELECTRONIC BALLASTS, WITH LED INDICATOR TO INDICATE OCCUPANCY. DETECT OCCURRENCES OF 6-INCH- MINIMUM MOVEMENT OF ANY PORTION OF A HUMAN BODY THAT PRESENTS A TARGET OF NOT LESS THAN 36 SQ. IN., DETECT OCCUPANCY ANYWHERE IN A CIRCULAR AREA OF 450 SQ. FT. WHEN MOUNTED ON A 96-INCH- HIGH CEILING., DETECT CORRIDOR OCCUPANCY WITHIN 90 FEET WHEN MOUNTED ON A 10-FOOT- HIGH CEILING. PROGRAM TIMER TO SHUT OFF LIGHTING AFTER 15 MINUTES OF NO ACTIVITY IN THE SPACE. TRAIN OWNER'S REPRESENTATIVE ON ADJUSTMENT FOR THE SENSOR FOR FUTURE ADJUSTMENTS.	SENSORSWITCH CM-PDT-9 WATTSTOPPER LEVITON HUBBELL
9	OS2	DUAL-TECHNOLOGY (PASSIVE INFRARED AND ULTRASONIC OR MICROPHONIC) CEILING SENSOR, 360 DEGREE COVERAGE OF 600-SF (SMALL MOTION), 2400 SF (LARGE MOTION) RANGE, 24V LOW VOLTAGE, DIGITAL TIME DELAY ADJUSTMENT FROM 30-SECONDS TO 30-MINUTES, ADJUSTABLE SENSITIVITY, COMPATIBLE WITH ALL ELECTRONIC BALLASTS, WITH LED INDICATOR TO INDICATE OCCUPANCY. PROGRAM TIMER TO SHUT OFF LIGHTING AFTER 15 MINUTES OF NO ACTIVITY IN THE SPACE. TRAIN OWNER'S REPRESENTATIVE ON ADJUSTMENT FOR THE SENSOR FOR FUTURE ADJUSTMENTS.	SENSORSWITCH CM-PDT-10 WATTSTOPPER LEVITON HUBBELL
10	PC PC-1	PHOTOCELL, 120/277-VOLT, 1800 VA RATING, SINGLE-POLE, SINGLE-THROW CONTACT, WEATHERPROOF, MOUNT WHERE INDICATED ON PLANS. SEE DRAWINGS FOR LOCATION AND ADDITIONAL WORK REQUIRED.	PARAGON CW-201-70 TORK INTERMATIC
11	PP	LIGHTING SWITCH POWER PACK, 120-VOLT INPUT, 24-VDC OUTPUT, SUITABLE FOR MOUNTING TO A STANDARD JUNCTION BOX.	SENSORSWITCH PP-20 WATTSTOPPER LEVITON HUBBELL
12	LCP	LIGHTING CONTROL PANEL, MODULAR, EXPANDABLE RELAY BASED, WITH HEAVY DUTY 14KAIC MECHANICALLY LATCHING INDEPENDENTLY REPLACEABLE RELAYS, MULTI-PHASE CONTROL, MECHANICAL OVER RIDE FOR EACH RELAY, PILOT LIGHT OUTPUTS FOR LIGHTING STATUS AT EACH REMOTE SWITCH, WITH SWITCH INPUTS FOR AUTOMATIC CONFIGURATION WITH OCCUPANCY SENSORS, CAPABLE OF GROUP SWITCHING, COMPATIBLE FOR USE WITH LOW VOLTAGE SWITCHES IN ITEM 8, RECESSED NEMA 1 ENCLOSURE, 120-VOLT INPUT. SEE DRAWINGS AND SPECIFICATIONS FOR ADDITIONAL INFORMATION.	LC&D WATTSTOPPER LEVITON
13	$\$_{L\#}$	PUSHBUTTON LOW-VOLTAGE SWITCH, DESIGNED FOR USE WITH LCP-1, CAPABLE OF CONTROLLING SINGLE OR MULTIPLE RELAYS OR DIMMING MODULES, PILOT LIGHT LEDS, STANDARD WALL BOX MOUNTING, NON-GANGABLE, WALL PLATE, REMOVABLE LENS CAP, ONE YEAR WARRANTY. # - INDICATES THE NUMBER OF ZONES CONTROLLED FOR ON-OFF-DIM. PROVIDE SILK-SCREENED LABELS AT EACH SWITCH PER OWNER'S DIRECTION.	LC&D WATTSTOPPER LEVITON
14		DOUBLE DUPLEX RECEPTACLE, TWO EACH DUPLEX RECEPTACLES IN ONE COMMON BACK BOX, STRAIGHT BLADE, 20 AMPERE, SPECIFICATION GRADE, 3 WIRE GROUNDING TYPE, IMPACT RESISTANT THERMOPLASTIC FACE. FEDERAL SPECIFICATION AND U.L. LISTED.	2 EACH HUBBELL #CR20 LEVITON, PASS & SEYMOUR, COOPER
15		DUPLEX RECEPTACLE, STRAIGHT BLADE, 20 AMPERE, SPECIFICATION GRADE, 3 WIRE GROUNDING TYPE, IMPACT RESISTANT THERMOPLASTIC FACE (T = TAMPER RESISTANT VERSION OF DEVICE)	HUBBELL #CR20, LEVITON, PASS & SEYMOUR, COOPER
16	T	TAMPER RESISTANT DUPLEX RECEPTACLE, STRAIGHT BLADE, 20 AMPERE, SPECIFICATION GRADE, 3 WIRE GROUNDING TYPE, IMPACT RESISTANT THERMOPLASTIC FACE.	HUBBELL #CR20--TR, LEVITON, PASS & SEYMOUR, COOPER
17	T/G	TAMPER RESISTANT, GROUND-FAULT PROTECTED DUPLEX RECEPTACLE, STRAIGHT BLADE, 20 AMPERE, SPECIFICATION GRADE, 3 WIRE GROUNDING TYPE, IMPACT RESISTANT THERMOPLASTIC FACE.	HUBBELL #GFTR20, LEVITON, PASS & SEYMOUR, COOPER
18	C	CEILING MOUNTED, WHITE, DUPLEX RECEPTACLE, STRAIGHT BLADE, 20 AMPERE, SPECIFICATION GRADE, 3 WIRE GROUNDING TYPE, IMPACT RESISTANT, WHITE THERMOPLASTIC FACE	HUBBELL #CR20WHI, LEVITON, PASS & SEYMOUR, COOPER

MATERIAL SCHEDULE

ITEM	SYMBOL	DESCRIPTION	MANUFACTURER
19	G	DOUBLE DUPLEX GROUND FAULT RECEPTACLE, TWO EACH GROUND FAULT INTERRUPTING RECEPTACLES IN ONE COMMON BACK BOX, STRAIGHT BLADE, 20 AMPERE, SPECIFICATION GRADE, 3 WIRE GROUNDING TYPE, IMPACT RESISTANT THERMOPLASTIC FACE, TEST AND RESET BUTTONS IN FACE. FEDERAL SPECIFICATION AND U.L. LISTED, 2003 U.L. 943 COMPLIANT.	2 EACH HUBBELL GF20, LEVITON, PASS & SEYMOUR, COOPER
20	G	GROUND FAULT DUPLEX RECEPTACLE, STRAIGHT BLADE, 20 AMPERE, SPECIFICATION GRADE, 3 WIRE GROUNDING TYPE, IMPACT RESISTANT THERMOPLASTIC FACE, TEST AND RESET BUTTONS IN FACE. FEDERAL SPECIFICATION AND U.L. LISTED, 2003 U.L. 943 COMPLIANT.	HUBBELL GF20, LEVITON, PASS & SEYMOUR, COOPER
21	G/W	GROUND FAULT, WEATHER RESISTANT, DUPLEX RECEPTACLE, STRAIGHT BLADE, 20 AMPERE, SPECIFICATION GRADE, 3 WIRE GROUNDING TYPE, IMPACT RESISTANT THERMOPLASTIC FACE, TEST AND RESET BUTTONS IN FACE. WEATHERPROOF COVERPLATE, NEMA 4 RATED WHILE IN USE. FEDERAL SPECIFICATION AND U.L. LISTED, 2003 U.L. 943 COMPLIANT.	HUBBELL GFTR20/WP826MP LEVITON, PASS & SEYMOUR, COOPER
22	W	WEATHER RESISTANT, SIMPLEX RECEPTACLE, STRAIGHT BLADE, 20 AMPERE, SPECIFICATION GRADE, 3 WIRE GROUNDING TYPE, IMPACT RESISTANT THERMOPLASTIC FACE, TEST AND RESET BUTTONS IN FACE. WEATHERPROOF COVERPLATE, NEMA 4 RATED WHILE IN USE. FEDERAL SPECIFICATION AND U.L. LISTED, 2003 U.L. 943 COMPLIANT.	HUBBELL, LEVITON, PASS & SEYMOUR, COOPER
23	DRYER	SPECIAL PURPOSE, 30 AMP, 250V, 4W, DRYER RECEPTACLE, PROVIDE PHASE AND NEUTRAL CONDUCTORS WITH GROUND TO EQUIPMENT AS REQUIRED. PROVIDE SPECIFICATION GRADE, IMPACT RESISTANT THERMOPLASTIC FACE RECEPTACLE WITH NEMA CONFIGURATION TO MATCH EQUIPMENT SUPPLIED.	HUBBELL LEVITON, PASS & SEYMOUR, COOPER
24		EQUIPMENT CONNECTION, E.C. SHALL FURNISH AND INSTALL FINAL CONNECTION TO EQUIPMENT FURNISHED BY OTHERS.	
25	J	JUNCTION BOX, SIZE AND CONSTRUCTION PER N.E.C. USE OF THIS SYMBOL DOES NOT INDICATE ALL JUNCTION BOXES REQUIRED FOR THIS CONTRACT.	
26		MOTOR CONNECTION, E.C. SHALL FURNISH AND INSTALL FINAL CONNECTION TO MOTOR LOAD FURNISHED BY OTHERS.	
27		DISCONNECT SWITCH, 600-VOLT, NON-FUSIBLE, HEAVY DUTY, LOCKABLE IN OFF POSITION, PROVIDE GROUND LUG, UL LISTED. COORDINATE ENCLOSURE NEMA TYPE WITH LOCATION. SIZE AND QUANTITY OF POLES SHALL MATCH EQUIPMENT DEVICE IS SERVING.	SQUARE 'D' CLASS 3110 CUTLER HAMMER SIEMENS GENERAL ELECTRIC
28		PUMP CONTROLLER FURNISHED BY OTHERS. COORDINATE WITH PLUMBING TRADE.	FURNISHED WITH PUMP(S) BY OTHERS
29	$\$_M$	MANUAL STARTER, FRACTIONAL HORSEPOWER TYPE, NEMA 1 ENCLOSURE, 120-VOLT, 20-AMPERE, WITH MELTING THERMAL OVERLOADS SIZED PER MOTOR NAMEPLATE, URL LISTED.	SQUARE 'D' CLASS 2510 CUTLER HAMMER SIEMENS GENERAL ELECTRIC
30	MDP	MAIN DISTRIBUTION PANELBOARD, NEMA 1 ENCLOSURE, 208/120-VOLT, 3 PHASE, 4 WIRE, COPPER BUS, SOLID NEUTRAL, GROUND BUS, SEE ONE LINE DIAGRAM AND PANEL SCHEDULES FOR ADDITIONAL INFORMATION. FURNISH AND INSTALL BREAKERS AS INDICATED ON THE PANEL SCHEDULE. PROVIDE INTEGRAL 240KA TVSS AS INDICATED ON THE PLANS AND SPECIFICATIONS.	SQUARE 'D' I-LINE SERIES CUTLER HAMMER GENERAL ELECTRIC SIEMENS
31	PANEL A B C M	PANEL BOARD, NEMA 1 ENCLOSURE, DOOR-IN-DOOR COVER CONSTRUCTION, 208/120 VOLT, 3 PHASE, 4 WIRE, COPPER BUS, SOLID NEUTRAL, GROUND BUS, SEE ONE LINE DIAGRAM AND PANEL SCHEDULES FOR ADDITIONAL INFORMATION. FURNISH AND INSTALL NEW BREAKERS AS INDICATED ON THE PANEL SCHEDULE. PROVIDE INTEGRAL 120KA TVSS AS INDICATED ON THE PLANS AND SPECIFICATIONS.	SQUARE 'D' NQ SERIES CUTLER HAMMER GENERAL ELECTRIC SIEMENS
32	PP	POWER DOOR PUSH PAD ROUGH-IN E.C. SHALL FURNISH AND INSTALL BACKBOX AS DIRECTED BY DOOR HARDWARE SUPPLIER. EXTEND ONE 3/4" CONDUIT TO THE ASSOCIATED DOOR POWER JUNCTION BOX AND ONE TO DOOR CONTROLLER.	ROUGH-IN ONLY; DEVICE FURNISHED BY OTHERS AND WIRED BY ELECTRICAL CONTRACTOR
33	FB-1 T,G,G/T	POWER DISTRIBUTION FLOOR BOX, STEEL CONSTRUCTION, CAST ALUMINUM COVER AND FLANGE ASSEMBLY, AND RECESSED DEVICES. FURNISH AND INSTALL ONE DUPLEX RECEPTACLE AND ONE BLANK PLATE IN BOX WITH CONDUIT AND BRANCH CIRCUIT CONDUCTORS AS NOTED. PROVIDE EMPTY 1" CONDUIT FOR FUTURE LOW-VOLTAGE USE AT END OF BOX WITH BLANK DEVICE PLATE. BOX SHALL BE SUITABLE FOR POURED IN PLACE CONCRETE, AT GRADE. INCLUDE BARRIER PANS AS NECESSARY. T = TAMPER-RESISTANT RECEPTACLE G = GROUND-FAULT RECEPTACLE T/G = TAMPER-RESISTANT GROUND-FAULT RECEPTACLE	WIREMOLD #RFB2-OG SERIES FLOOR BOX WITH CAST COVER, DUPLEX RECEPTACLE, AND BLANK PLATE

GENERAL ELECTRICAL NOTES:

1. ALL INSTALLATIONS SHALL BE IN ACCORDANCE WITH ALL FEDERAL, STATE AND LOCAL CODES INCLUDING BUT NOT LIMITED TO THE NATIONAL ELECTRICAL CODE, THE INTERNATIONAL BUILDING CODE, AMERICANS WITH DISABILITIES ACT ACCESSIBILITY GUIDELINES AND ASHRAE 90.1. THE AUTHORITY HAVING JURISDICTION SHALL HAVE THE FINAL DECISION ON ALL INSTALLATIONS AND PRACTICES.
2. REFER TO THE MATERIAL SCHEDULE, LUMINAIRE SCHEDULE, AND OTHER ASSOCIATED SCHEDULES FOR MANUFACTURERS AND COMPLETE DESCRIPTIONS OF ALL EQUIPMENT.
3. ALL ELECTRICAL CONDUCTORS SHALL BE STRANDED COPPER WITH TYPE THHN INSULATION UNLESS SPECIFICALLY NOTED OTHERWISE. THE MINIMUM WIRE SIZE SHALL BE #12 AWG.
4. CIRCUIT IDENTIFICATION NUMBERS ARE TO COORDINATE CIRCUITING WITH THE ASSOCIATED PANEL. THE CIRCUIT NUMBERS SHALL BE FIELD MODIFIED TO BALANCE THE ELECTRICAL LOAD ON ALL THREE PHASES AS EVENLY AS POSSIBLE.
5. ALL CIRCUITS SHALL HAVE DEDICATED NEUTRALS.
6. A GREEN GROUNDING CONDUCTOR SHALL BE CONNECTED TO ALL LOADS SERVED. THE CONDUCTOR SHALL BE SIZED PER THE NATIONAL ELECTRICAL CODE TO ACCOMMODATE THE LOAD SERVED. ALL GROUNDING CONDUCTORS SHALL BE INSTALLED IN CONDUIT.
7. ALL BUILDING WIRING SHALL BE INSTALLED IN CONDUIT. MINIMUM CONDUIT SIZE SHALL BE ¾".
8. MC CABLING IS NOT PERMITTED.ALL CONDUCTORS SHALL BE IN CONDUIT.
9. ALL CONDUITS SHALL BE CONCEALED IN WALLS, ABOVE CEILINGS, ETC. WHERE POSSIBLE. ALL CONDUIT ROUTED EXPOSED SHALL BE INSTALLED IN A WORKMAN-LIKE MANNER. SURFACE MOUNTED CONDUITS IN FINISHED SPACES ARE NOT PERMITTED. ALL EXPOSED CONDUITS IN UNFINISHED AREAS SHALL BE ROUTED PARALLEL AND PERPENDICULAR TO WALLS AND CEILINGS.
10. COORDINATE THE EXACT LOCATION OF ALL DEVICES LOCATED ABOVE OR BELOW COUNTERS, IN CASEWORK, ETC. WITH OTHER TRADES, ARCHITECTURAL ELEVATIONS, AND REVIEWED SUBMITTALS PRIOR TO ROUGH-IN.
11. ALL CUTTING AND PATCHING REQUIRED FOR CONDUITS, DEVICES, OR OTHER ELECTRICAL EQUIPMENT SHALL BE THE RESPONSIBILITY OF THE ELECTRICAL CONTRACTOR.
12. ALL PENETRATIONS THROUGH FIRE-RATED WALLS, FLOORS, AND CEILINGS SHALL BE SEALED WITH AN APPROVED FIRE-RATED SYSTEM EQUAL TO OR EXCEEDING THE RATING OF THE MATERIAL PENETRATED.
13. COORDINATE LOCATIONS OF ALL ELECTRICAL ITEMS INCLUDING LIGHTING FIXTURES, CEILING MOUNTED DEVICES (OCCUPANCY SENSORS, FIRE ALARM DETECTORS, SPEAKERS, ETC.) WITH ALL SPRINKLER HEADS, AIR SUPPLY AND AIR RETURN DIFFUSERS. ALL CEILING DEVICES SHALL BE CENTERED IN CEILING TILE.
14. COORDINATE ALL MOUNTING OF ELECTRICAL EQUIPMENT REQUIRED FOR EQUIPMENT SUPPLIED BY OTHERS. EQUIPMENT SHALL BE MOUNTED TO AVOID ANY INTERFERENCE WITH OTHER EQUIPMENT OPERATION OR ACCESS. ALL INSTALLATIONS OF ELECTRICAL EQUIPMENT TO EQUIPMENT SUPPLIED BY OTHERS SHALL BE COORDINATED AND APPROVED BY SUPPLYING CONTRACTOR PRIOR TO ROUGH-IN.
15. BOXES LOCATED ON OPPOSITE SIDES OF FIRE RATED WALLS SHALL BE OFFSET A MINIMUM OF 24" OR A FIRE RATED MATERIAL EQUAL TO OR GREATER THAN THE FIRE WALL MATERIAL RATING SHALL BE INSTALLED AROUND THE BOX. BOXES LOCATED ON OPPOSITE SIDES OF NON-FIRE RATED WALLS SHALL BE OFFSET A MINIMUM OF 6".
16. REMOVE AND REINSTALL ALL CEILING TILES AS REQUIRED TO PERFORM ALL ELECTRICAL WORK REQUIRED. ALL CEILING TILES WHICH ARE DAMAGED SHALL BE REPLACED WITH NEW TILE OF THE SAME MANUFACTURER AND MODEL AS EXISTING TILE.
17. FLUSH MOUNT ALL TOGGLE SWITCHES 42" ABOVE THE FINISHED FLOOR TO THE CENTER OF THE DEVICE UNLESS OTHERWISE NOTED.
18. FLUSH MOUNT ALL RECEPTACLES AND TELECOMMUNICATIONS OUTLETS 18" ABOVE THE FINISHED FLOOR TO THE CENTER OF THE DEVICE UNLESS OTHERWISE NOTED.
19. 'A' SUBSCRIPT NEXT TO A DEVICE INDICATES INSTALLATION ABOVE COUNTER.
'B' SUBSCRIPT NEXT TO A DEVICE INDICATES INSTALLATION BELOW COUNTER.
COORDINATE ALL LOCATIONS WITH ARCHITECTURAL DRAWINGS AND SUBMITTALS. FIELD VERIFY ALL LOCATIONS PRIOR TO ROUGH IN.
20. LINE TYPE KEY:
a. NEW WORK BY THE ELECTRICAL CONTRACTOR
b. NEW WORK BY OTHERS
21. INDICATES THE TYPE OF CONDUCTORS IN THE CONDUIT. VERIFY QUANTITY FOR EACH SPECIFIC LOAD SERVED.
GROUND CONDUCTOR
PHASE CONDUCTOR
NEUTRAL CONDUCTOR
22. CONDUCTOR TICK MARKS INDICATED ON CONDUITS DO NOT REPRESENT THE QUANTITY OF CONDUCTORS IN THE CONDUIT, BUT THE TYPE ONLY. THE CONTRACTOR IS RESPONSIBLE FOR VERIFYING THE REQUIRED QUANTITY OF GROUND, NEUTRAL, PHASE, AND SWITCH LEGS IN EACH CONDUIT.

GENERAL ELECTRICAL DEMOLITION NOTES

1. THE DRAWINGS ARE INTENDED TO INDICATE THE SCOPE OF WORK REQUIRED FOR THIS PROJECT. THEY ARE NOT INTENDED TO INDICATE THE LOCATION OF ALL JUNCTION BOXES, CONDUITS, ETC.. THE CONTRACTOR SHALL VISIT THE SITE PRIOR TO BIDDING TO VERIFY ALL RELEVANT EXISTING CONDITIONS.
2. DISCONNECT ALL ELECTRICAL SYSTEMS AS REQUIRED IN FLOORS, WALLS, CEILINGS AND OTHER STRUCTURES SCHEDULED FOR REMOVAL.
3. ELECTRICAL ITEMS (i.e., LIGHTING FIXTURES, RECEPTACLES, SWITCHES, ETC.) REMOVED AND NOT RELOCATED REMAIN THE PROPERTY OF THE OWNER. THE CONTRACTOR SHALL BE RESPONSIBLE FOR THE DISPOSAL OF MATERIAL THE OWNER DOES NOT WANT TO REUSE OR RETAIN (i.e., FOR MAINTENANCE PROPOSES).
4. PROVIDE TEMPORARY WIRING AND ASSOCIATED CONNECTIONS AS REQUIRED TO MAINTAIN EXISTING SYSTEMS OPERATION DURING CONSTRUCTION. ASSUME ALL EQUIPMENT MUST REMAIN OPERATIONAL DURING CONSTRUCTION UNLESS SPECIFICALLY NOTED OTHERWISE.
5. THE CONTRACTOR SHALL OBTAIN APPROVAL FROM THE OWNER BEFORE TURNING OFF POWER TO CIRCUITS, FEEDERS, PANELS, ETC. COORDINATE ALL OUTAGES WITH OWNER. CONDUIT CONCEALED IN WALL CONSTRUCTION MAY BE ABANDONED IN PLACE IF NOT AFFECTED BY OTHER CONSTRUCTION.
6. PROTECT WALLS, CEILINGS, FLOORS, AND OTHER EXISTING FINISH WORK THAT ARE TO REMAIN AND ARE EXPOSED DURING SELECTIVE DEMOLITION OPERATIONS.
7. DEMOLISH AND REMOVE EXISTING CONSTRUCTION ONLY TO THE EXTENT REQUIRED BY NEW CONSTRUCTION AND AS INDICATED. USE METHODS REQUIRED TO COMPLETE WORK WITHIN LIMITATIONS OF GOVERNING REGULATIONS AND AS INDICATED IN THESE NOTES.
8. WHERE LIGHTS, SWITCHES, RECEPTACLES, ETC., ARE BEING REMOVED ALL ASSOCIATED CONDUIT AND WIRE BACK TO THE PANEL BOARD OR FEEDER JUNCTION BOX SERVING THE DEVICE SHALL ALSO BE REMOVED, UNLESS THE CONDUIT CAN BE REUSED FOR NEW CONDUCTORS.
9. ALL CONDUIT SHALL BE REMOVED WHERE WALLS ARE BEING REMOVED. WHERE CONDUIT IS IN THE CONCRETE SLAB, CUT OFF FLUSH, PULL OUT WIRE, AND PLUG. WHERE CONDUIT IS RUN EXPOSED, ALL ASSOCIATED CLAMPS, SUPPORTS, HANGERS, ETC., SHALL ALSO BE REMOVED.
10. THIS CONTRACTOR SHALL COORDINATE ALL HIS WORK WITH OTHER CONTRACTORS AT THE JOB SITE BEFORE REMOVING EXISTING ELECTRICAL AND INSTALLING NEW ITEMS.
11. EXISTING CONDUIT IN GOOD CONDITION, MAY BE REUSED IN PLACE. RELOCATED EXISTING CONDUIT SHALL NOT BE ALLOWED. BONDING CONDUCTORS SHALL BE INSTALLED IN ALL REUSED CONDUIT TO ASSURE PROPER GROUND PATH.
12. EQUIPMENT REMOVAL IN CERTAIN LOCATIONS MAY REQUIRE THE INSTALLATION OF A JUNCTION BOX TO RECONNECT CIRCUITS THAT REMAIN IN OPERATION. EXTEND CONDUIT AND WIRING AS REQUIRED TO MAINTAIN POWER TO REMAINING EQUIPMENT.
13. PROCEED WITH SELECTIVE DEMOLITION SYSTEMATICALLY.
14. TRANSPORT DEMOLISHED MATERIALS FROM OWNER'S PROPERTY AND LEGALLY DISPOSE OF THEM.
15. REMOVE, STORE, CLEAN, REINSTALL, RECONNECT, AND MAKE OPERATIONAL ALL COMPONENTS INDICATED FOR RELOCATION.
16. DO NOT INTERRUPT EXISTING UTILITIES SERVING OCCUPIED OR OPERATING FACILITIES EXCEPT WHEN AUTHORIZED IN WRITING BY OWNER AND AUTHORITIES HAVING JURISDICTION. PROVIDE TEMPORARY SERVICES DURING INTERRUPTIONS TO EXISTING UTILITIES AS ACCEPTABLE BY OWNER AND AUTHORITY HAVING JURISDICTION.
17. SEAL ALL UNUSED OPENINGS DUE TO REMOVAL OF ELECTRICAL EQUIPMENT TO MATCH EXISTING CONSTRUCTION. ALL UNUSED OPENINGS IN FIRE RATED WALLS SHALL BE SEALED WITH A UL LISTED FIRE SEALING SYSTEM TO MATCH THE EXISTING FIRE RATING.
18. CONTRACTOR SHALL REMOVE AND INSTALL ALL CEILING TILES AS REQUIRED FOR THE EXECUTION OF ELECTRICAL WORK THAT IS OUTSIDE THE CONTRACT LIMITS OF CONSTRUCTION. CONTRACTOR SHALL REPLACE CEILING TILES WITH IDENTICAL MATERIAL WHERE DAMAGED BY THIS CONTRACTOR.
19. BALLAST MANUFACTURED PRIOR TO 1980 CONTAIN PCB's AND SHALL BE DISPOSED OF BY A FEDERAL OR STATE E.P.A. APPROVED METHOD AND IN ACCORDANCE WITH SPECIFICATIONS.
20. HID AND FLUORESCENT LAMPS CONTAIN MERCURY AND SHALL BE DISPOSED OF BY A FEDERAL OR STATE E.P.A. APPROVED METHOD AND IN ACCORDANCE WITH SPECIFICATIONS.
21. WHERE TELECOMMUNICATIONS OUTLETS, (VOICE/DATA/CABLE ETC.), ARE BEING REMOVED ALL ASSOCIATED CONDUIT AND WIRE BACK TO THE TERMINATION EQUIPMENT SERVING THE DEVICE SHALL ALSO BE REMOVED.

apaceDesign
architects engineers designers
apaceDesign 2112 East War Memorial Drive Peoria Illinois 61614 t:309.685.4722 f:309.685.4784 www.apaceDesign.com

KEITH ENGINEERING DESIGN, INC.
208 S. FIRST ST. MORTON, IL 61550
PH. 309-938-4005 FAX 309-214-0063

MATERIAL SCHEDULE AND GENERAL NOTES

Peoria PlayHouse Children's Museum
Peoria Park District
Glen Oak Park Pavillion
Peoria, IL 61603

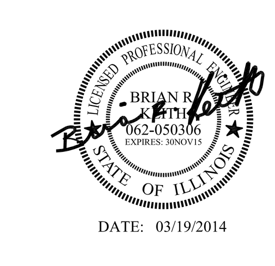

DATE: 03/19/2014

NO.	ISSUE	DATE
1	Bidding Documents	3.19.14

DATE 3.19.2014	PROJECT NO. 24905.02
DRAWN BY DRJ	SHEET
CHECKED TDC	E501
APPROVED BRK	20 OF 20

CODE

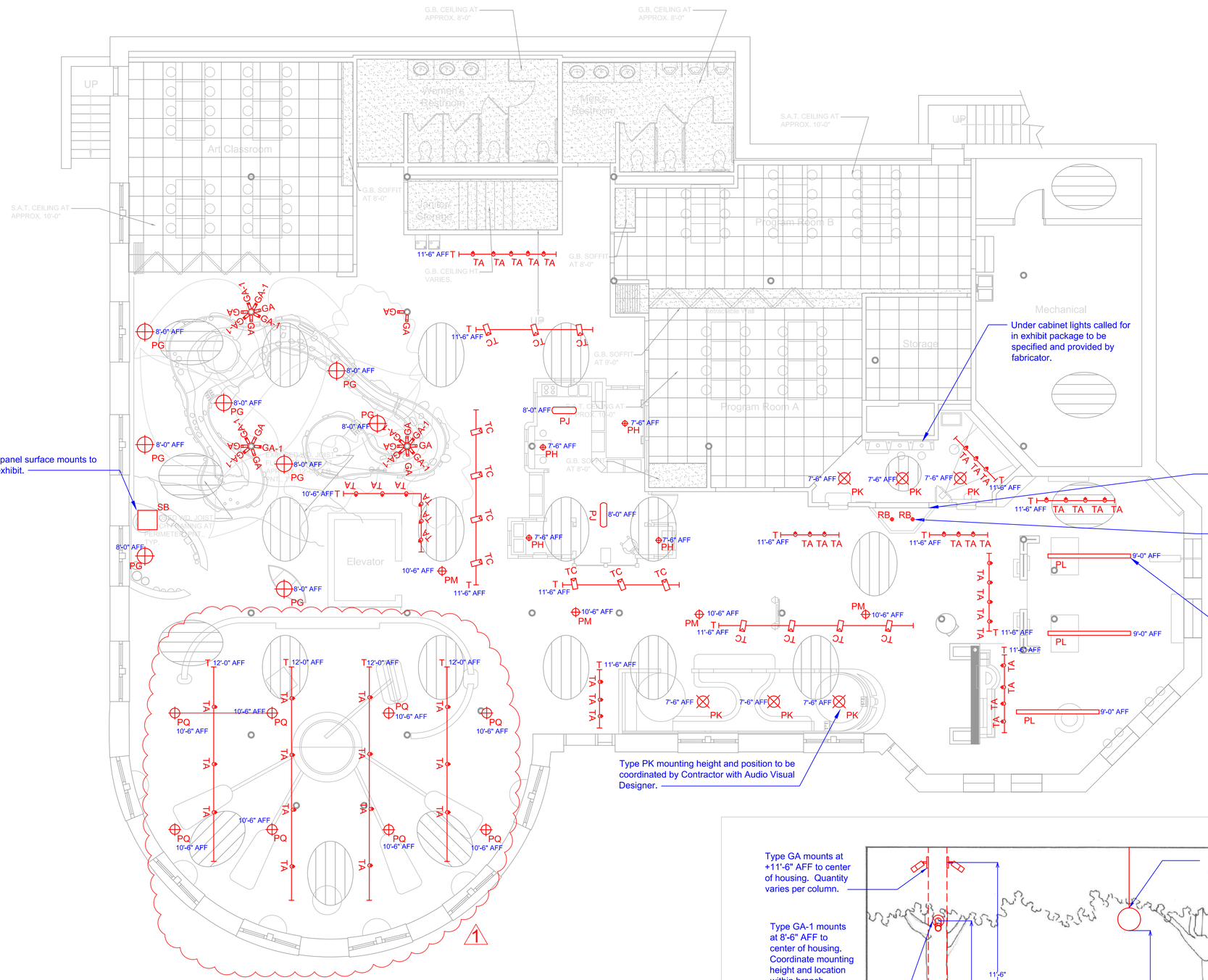

1 Level 1 Lighting Layout
SCALE: 3/16" = 1'-0"

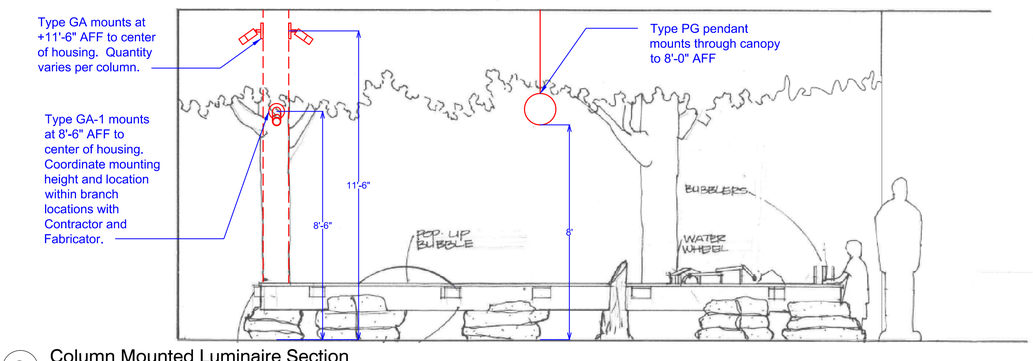

2 Column Mounted Luminaire Section
SCALE: 3/8" = 1'-0"

General Lighting Notes:

- All Exhibit lighting to be controlled via low voltage switch, unless called out to be dimmed. Switch to be located by owner.

- Lighting shown on this sheet is exhibit lighting only. Work lights/House lights/clean-up lights and emergency lighting by others.

- All Emergency, life safety, and fire protection requirements as they relate to exhibit lighting must be decided, verified, and approved prior to installation of the exhibit lighting systems.

- Contractor to verify field dimensions and conditions prior to final order. Contractor shall inform ALD of any conflicts with structure, HVAC, and plumbing prior to ordering.

- Contractor is responsible for all miscellaneous mounting hardware necessary for proper installation of exhibit lighting systems.

- All dimmed circuits must employ a separate neutral.

- Contractor is responsible for final lighting fixture count.

- All electrified lighting track and track heads to be finished aluminum unless otherwise noted.

- Exact stem and pendant lengths for all pendant mounted luminaires to be field verified by Contractor prior to ordering.

-All notations as follows: "XX'-XX" AFF" indicate mounting height of adjacent luminaire to the bottom of the luminaire or electrified track. All mounting heights to be confirmed by contractor in the field prior to rough in and/or final order.

Peoria Children's Musem
Peoria, IL

JRA
Jack Rouse Associates

abernathy lighting design
15 Thomas Street
Suite B
N. Providence RI 02911
tel: 401.233.4412
fax: 401.233.4415
info@abernathylightdesign.com
www.abernathylightdesign.com

Documents produced by Abernathy Lighting Design are intended to convey the lighting design intent to the Contractor, who will in turn, supply any support wiring or electrical engineering required to achieve said design. These documents do NOT constitute electrical engineering or wiring construction documents.
Scales as stated hereon are valid on the original drawing only. Contractor shall carefully review all dimensions and conditions shown hereon and at once report to the Lighting Designer any error, inconsistency or omission they may discover.

Schematic Design Drawings

FOR REFERENCE ONLY
These documents are not for construction

Submittal Dates
2014-1-6
1 2014-1-23
-
-
-
-
-
-
-
-
-

☐ Approved
☐ Approved as Noted
☐ Not Approved
By: Date:

Drawn By: -
Cad File: -

Project No. 13.500.10

Area Name:
Level 1 Lighting RCP

Sheet No.
LL-101

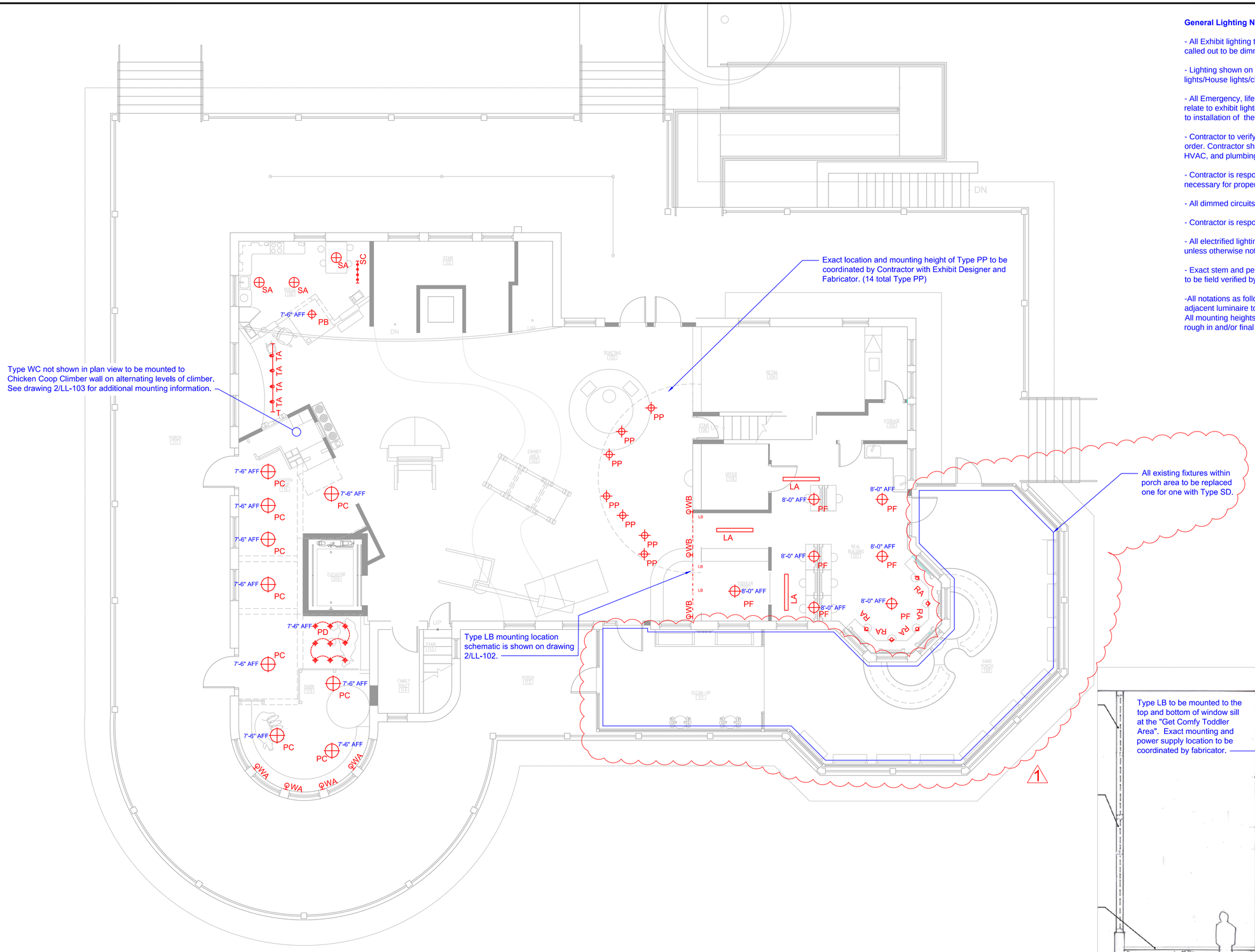

1 Level 2 Lighting Layout
SCALE: 3/16" = 1'-0"

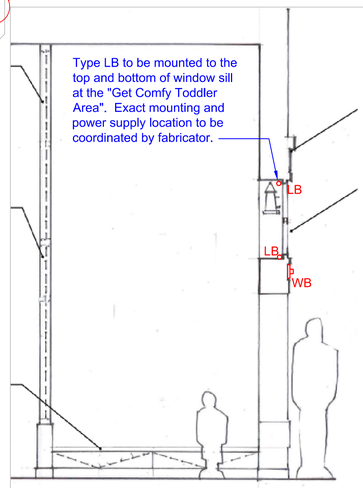

2 Type LB Mounting Location
SCALE: 3/8" = 1'-0"

General Lighting Notes:

- All Exhibit lighting to be controlled via low voltage switch, unless called out to be dimmed. Switch to be located by owner.

- Lighting shown on this sheet is exhibit lighting only. Work lights/House lights/clean-up lights and emergency lighting by others.

- All Emergency, life safety, and fire protection requirements as they relate to exhibit lighting must be decided, verified, and approved prior to installation of the exhibit lighting systems.

- Contractor to verify field dimensions and conditions prior to final order. Contractor shall inform ALD of any conflicts with structure, HVAC, and plumbing prior to ordering.

- Contractor is responsible for all miscellaneous mounting hardware necessary for proper installation of exhibit lighting systems.

- All dimmed circuits must employ a separate neutral.

- Contractor is responsible for final lighting fixture count.

- All electrified lighting track and track heads to be finished aluminum unless otherwise noted.

- Exact stem and pendant lengths for all pendant mounted luminaires to be field verified by Contractor prior to ordering.

-All notations as follows: "XX'-XX" AFF" indicate mounting height of adjacent luminaire to the bottom of the luminaire or electrified track. All mounting heights to be confirmed by contractor in the field prior to rough in and/or final order.

Peoria Children's Museum
Peoria, IL

Jack Rouse Associates

abernathy lighting design
15 Thomas Street
Suite B
N. Providence RI 02911
tel: 401.233.4412
fax: 401.233.4415
info@abernathylightdesign.com
www.abernathylightdesign.com

Documents produced by Abernathy Lighting Design are intended to convey the lighting design intent to the Contractor, who will in turn, supply any support wiring or electrical engineering required to achieve said design. These documents do NOT constitute electrical engineering or wiring construction documents.
Scales as stated hereon are valid on the original drawing only. Contractor shall carefully review all dimensions and conditions shown hereon and at once report to the Lighting Designer any error, inconsistency or omission they may discover.

Schematic Design Drawings

FOR REFERENCE ONLY
These documents are not for construction

Submittal Dates
2014-1-6
⚠ 2014-1-23
-
-
-
-
-
-
-
-
-

☐ Approved
☐ Approved as Noted
☐ Not Approved
By:_____ Date:_____

Drawn By: -
Cad File: -

Project No. 13.500.10

Area Name:
Level 2 Lighting RCP

Sheet No.
LL-102

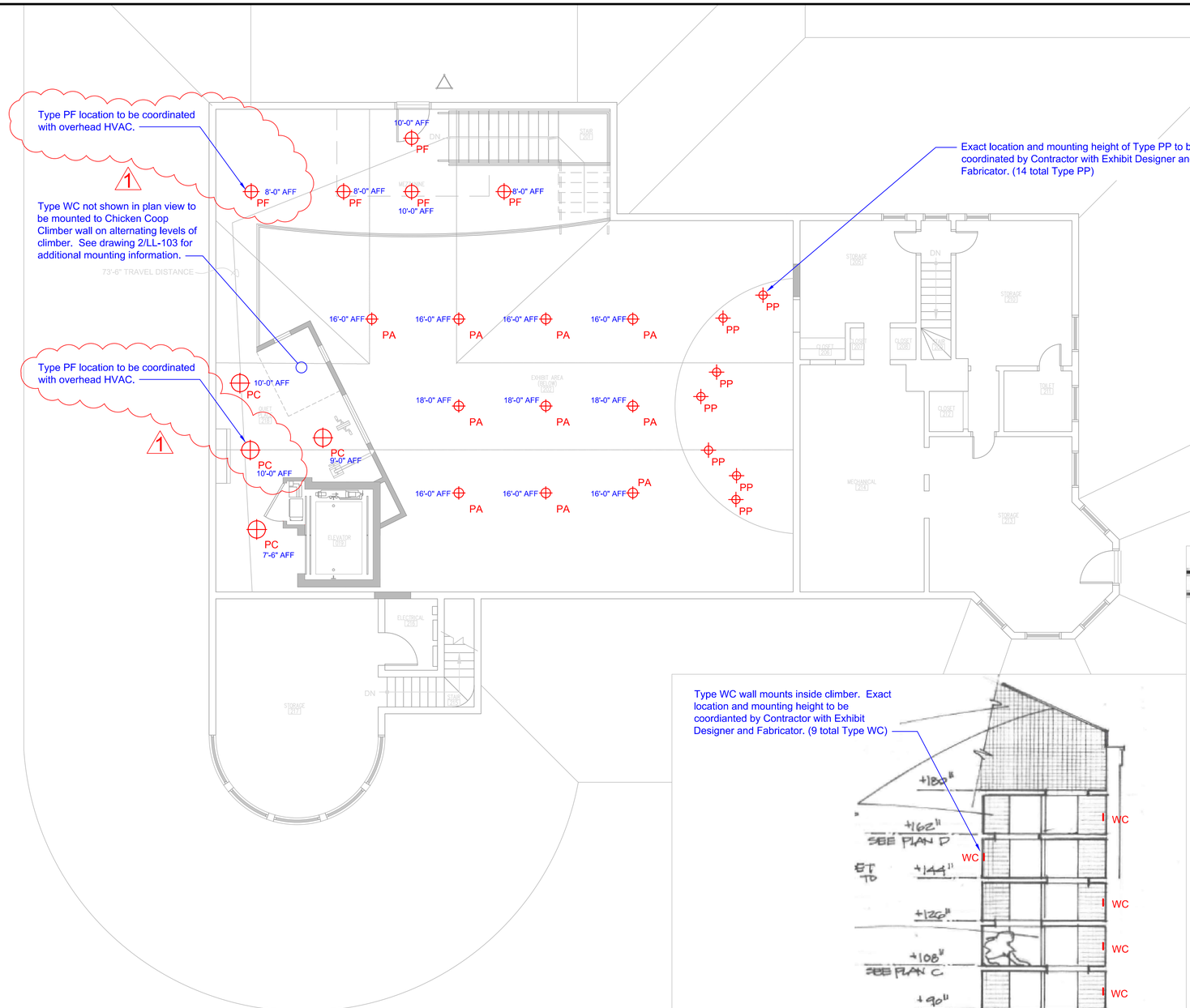

1 Level 3 Lighting Layout
SCALE: 3/16" = 1'-0"

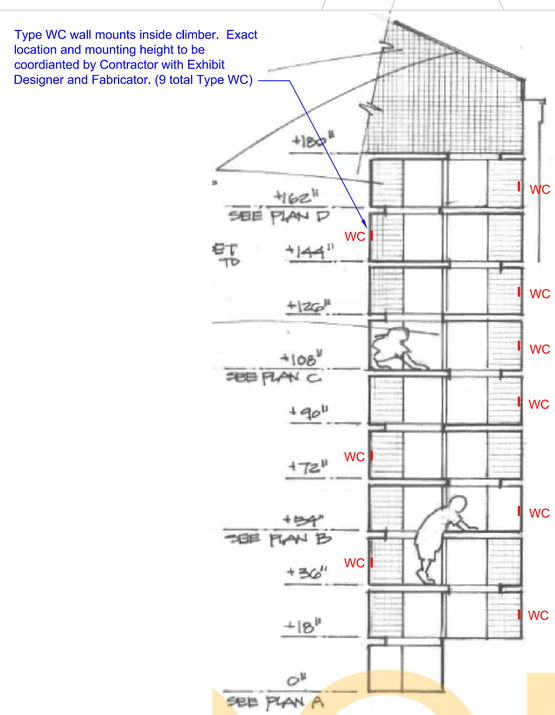

2 Chicken Coop Climber Lighting Locations
SCALE: 1/2" = 1'-0"

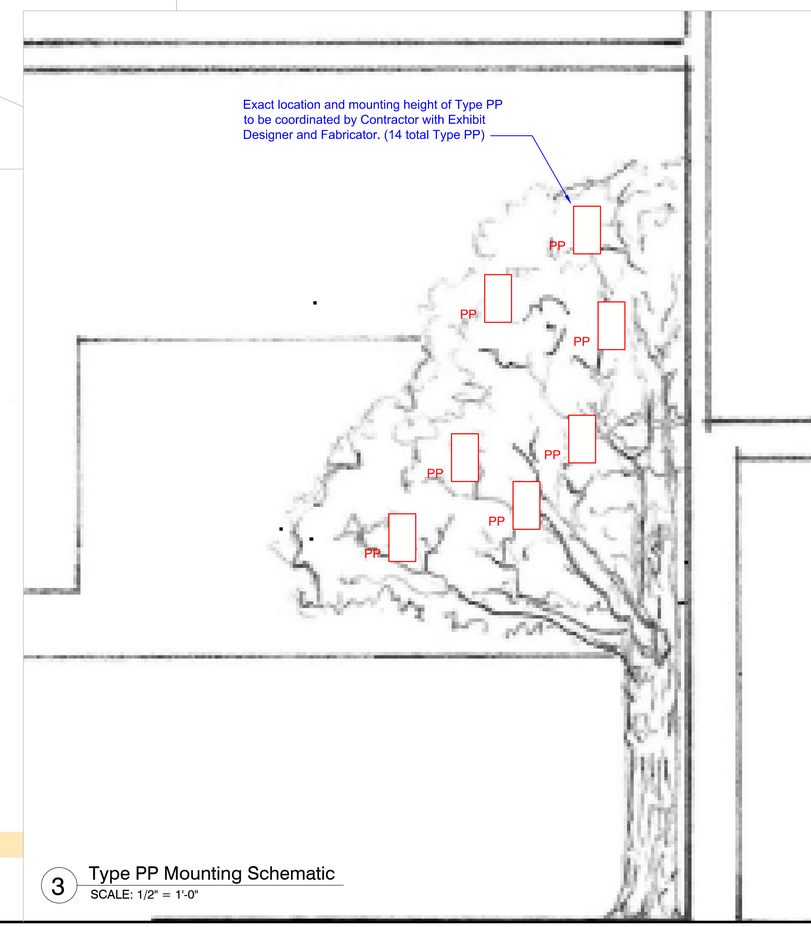

3 Type PP Mounting Schematic
SCALE: 1/2" = 1'-0"

General Lighting Notes:

- All Exhibit lighting to be controlled via low voltage switch, unless called out to be dimmed. Switch to be located by owner.

- Lighting shown on this sheet is exhibit lighting only. Work lights/House lights/clean-up lights and emergency lighting by others.

- All Emergency, life safety, and fire protection requirements as they relate to exhibit lighting must be decided, verified, and approved prior to installation of the exhibit lighting systems.

- Contractor to verify field dimensions and conditions prior to final order. Contractor shall inform ALD of any conflicts with structure, HVAC, and plumbing prior to ordering.

- Contractor is responsible for all miscellaneous mounting hardware necessary for proper installation of exhibit lighting systems.

- All dimmed circuits must employ a separate neutral.

- Contractor is responsible for final lighting fixture count.

- All electrified lighting track and track heads to be finished aluminum unless otherwise noted.

- Exact stem and pendant lengths for all pendant mounted luminaires to be field verified by Contractor prior to ordering.

-All notations as follows: "XX'-XX" AFF" indicate mounting height of adjacent luminaire to the bottom of the luminaire or electrified track. All mounting heights to be confirmed by contractor in the field prior to rough in and/or final order.

Peoria Children's Museum
Peoria, IL

Jack Rouse Associates

abernathy lighting design
15 Thomas Street
Suite B
N. Providence RI 02911
tel: 401.233.4412
fax: 401.233.4415
info@abernathylightdesign.com
www.abernathylightdesign.com

Documents produced by Abernathy Lighting Design are intended to convey the lighting design intent to the Contractor, who will in turn, supply any support wiring or electrical engineering required to achieve said design. These documents do NOT constitute electrical engineering or wiring construction documents.
Scales as stated hereon are valid on the original drawing only. Contractor shall carefully review all dimensions and conditions shown hereon and at once report to the Lighting Designer any error, inconsistency or omission they may discover.

Schematic Design Drawings

FOR REFERENCE ONLY
These documents are not for construction

Submittal Dates

2014-1-6
⚠ 2014-1-23
-
-
-
-
-
-
-
-
-

☐ Approved
☐ Approved as Noted
☐ Not Approved
By: Date:

Drawn By: -
Cad File: -

Project No. 13.500.10

Area Name:
Level 3 Lighting RCP

Sheet No.
LL-103